Oversight/NHS		
FHWA REGION VIII OVERSIGHT?	☒ NO	☐ YES
NATIONAL HIGHWAY SYSTEM?	☒ NO	☐ YES

Related Projects:
P. E. UNDER PROJECT: Project Number BR 0361-064 Project Code 12811
R.O.W. Projects: R.O.W Project Description: BR 0361-064

DEPARTMENT OF TRANSPORTATION
STATE OF COLORADO

HIGHWAY CONSTRUCTION ~~BID PLANS OF PROPOSED~~ AS-CONSTRUCTED PLANS

FEDERAL AID PROJECT NO. BR 0361-064
STATE HIGHWAY NO. 36
WASHINGTON COUNTY
CONSTRUCTION PROJECT CODE NO. 12811

TABULATION OF LENGTH & DESIGN DATA

STATION	Feet ROADWAY	
Sta. 106+00 ~ Beg. BR 0361-064 = Approx. Sta. xx+xx on Proj. xxx = Ref. Point 131.625	400	
Sta. 110+00 ~ End BR 0361-064 = Approx. Sta. xx+xx on Proj. xxx = Ref. Point 131.701		
TOTAL	xxx	
SUMMARY	Feet	Miles
ROADWAY (NET LENGTH)	400	0.076
PROJECT GROSS LENGTH	400	0.076
DESIGN DATA	S.H. 36	
MINIMUM RADIUS OF CURVE	N/A	
MAXIMUM GRADE	4%	
MINIMUM S.S.D. HORIZONTAL	< 1300'	
MINIMUM S.S.D. VERTICAL	N/A	
MAXIMUM DESIGN SPEED	65 MPH	
2003 TRAFFIC	DHV = 74 ADT = 618	
2023 DESIGN TRAFFIC	DHV = 118 ADT = 983	
DHV TRUCKS %	44%	
CLEAR ZONE DISTANCE (TANGENT)	42 Ft.	

MP 131.625 - 131.701

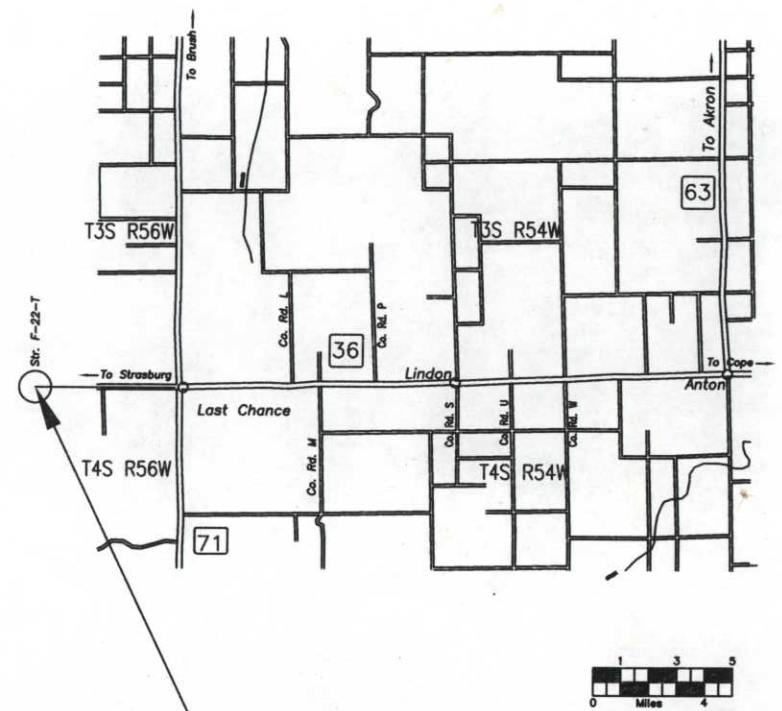

Project Location

Index of Sheets

1 Title Sheet
2 Standard Plans List
3-4 Typical Sections and Typical Notes
5 General Notes
6-7 Summary of Approximate Quantities
8 Structure Quantities
9 Summary of Earthwork Quantities, Removal of Asphalt Mat, Surfacing Plan, Detour Surfacing Plan
10 Tabulation of Delineators, Tabulation of Fence, Removal of Guardrail
11 Roadway Plan Sheet
12 Roadway Profile Sheet
13 Detour Plan Sheet
14 Detour Profile Sheet
15 Construction Traffic Control Devices
16 Stormwater Management Plan
17 Survey Tabulation
R.O.W. Plans (1 sheets)

New & Revised Standards

M-607-1, Wire Fences And Gates, 01/16/04, 3 Sheets
M-627-1, Typical Pavement Markings, 03/23/04, 5 Sheets
S-630-1, Traffic Controls For Highway Construction, 09/03/03, 10 Sheets

Computer File Information	
Creation Date: 31/Jul/96 Initials: mcs	
Last Modification Date: 27/Jul/04 14:34 Initials: mcs	
Full Path: C:\12811 Last Chance\Roadway\Plans\	
Drawing File Name: 01title.dwg	
Acad Ver.: 16.0s (LMSdtech) Scale: N/A Units: English	

Index of Revisions			
(R-1)	10-07-04	Shts. 1,5,6,8,9,11,12	MCS
(R-2)			
(R-3)			
(R-4)			
(R-5)			

Colorado Department of Transportation
DOT
1420 2nd Street
Greeley CO 80631
Phone: 970-506-4949 FAX: 970-339-9530
Region 4 DWP

As Constructed	
No Revisions:	07-13-05
Revised:	09-13-05
Void:	

Contract Information	
Contractor:	Arapahoe Utilities & Infrastructure, Inc.
Resident Engineer:	Douglas W. Pearson
Project Engineer:	~~Glenn Frieler~~ Greg Jones
PROJECT STARTED:	07/04/05 ACCEPTED: 09/13/05
Comments:	

Project No./Code
BR 0361-064
12811
Sheet Number 1

PLAN NUMBER	M STANDARD TITLE		PAGE NUMBER
■ M-100-1	STANDARD SYMBOLS		1
□ M-203-1	APPROACH ROADS		2
□ M-203-2	DITCH TYPES		3
□ M-203-10	SUPERELEVATION CROWNED HIGHWAYS		4
□ M-203-11	SUPERELEVATION DIVIDED HIGHWAYS SHOULDER PIVOT		5
□ M-203-12	SUPERELEVATION STREETS		6
□ M-203-13	SUPERELEVATION DIVIDED HIGHWAYS CENTER PIVOT		7
■ M-206-1	EXCAVATION AND BACKFILL FOR STRUCTURES	(2 SHEETS)	8-9
□ M-206-2	EXCAVATION AND BACKFILL FOR BRIDGES	(2 SHEETS)	10-11
□ M-208-1	TEMPORARY EROSION CONTROL	(7 SHEETS)	12-18
□ M-210-1	MAILBOX SUPPORTS	(2 SHEETS)	19-20
□ M-214-1	PLANTING DETAILS		21
□ M-412-1	CONCRETE PAVEMENT JOINTS	(3 SHEETS)	22-24
□ M-506-1	GABIONS AND SLOPE MATTRESS		25
□ M-510-1	STRUCTURAL PLATE CULVERT PIPE H-20 LOADING		26
□ M-601-1	SINGLE CONCRETE BOX CULVERT	(2 SHEETS)	27-28
■ M-601-2	DOUBLE CONCRETE BOX CULVERT	(2 SHEETS)	29-30
□ M-601-3	TRIPLE CONCRETE BOX CULVERT	(2 SHEETS)	31-32
□ M-601-10	HEADWALL FOR PIPE CULVERTS		33
□ M-601-11	TYPE "S" SADDLE HEADWALL FOR PIPE CULVERTS		34
□ M-601-12	HEADWALLS AND CULVERT OUTLET PAVING		35
■ M-601-20	WINGWALLS FOR PIPE OR BOX CULVERTS		36
□ M-603-1	METAL AND PLASTIC CULVERT PIPE	(2 SHEETS)	37-38
□ M-603-2	REINFORCED CONCRETE PIPE		39
□ M-603-3	PRECAST CONCRETE BOX CULVERT		40
□ M-603-10	CONCRETE AND METAL END SECTIONS	(2 SHEETS)	41-42
□ M-604-10	INLET, TYPE C		43
□ M-604-11	INLET, TYPE D		44
□ M-604-12	CURB INLET, TYPE R	(2 SHEETS)	45-46
□ M-604-13	CONCRETE INLET, TYPE 13		47
□ M-604-20	MANHOLES	(3 SHEETS)	48-50
□ M-604-25	VANE GRATE INLET WITH FRAME AND CONCRETE APRON	(5 SHEETS)	51-55
□ M-605-1	SUBSURFACE DRAINS		56
□ M-606-1	GUARDRAIL, TYPE 3, W-BEAM	(15 SHEETS)	57-71
□ M-606-12	GUARDRAIL, TYPE 4, CONCRETE BARRIER	(2 SHEETS)	72-73
□ M-606-13	GUARDRAIL, TYPE 7, F-SHAPE BARRIER	(4 SHEETS)	74-77

PLAN NUMBER	M STANDARD TITLE		PAGE NUMBER
□ M-607-1	WIRE FENCES AND GATES	(3 SHEETS)	78-80
□ M-607-2	CHAIN LINK FENCE	(3 SHEETS)	81-83
□ M-607-3	BARRIER FENCE		84
□ M-607-4	DEER FENCE AND GATES	(2 SHEETS)	85-86
□ M-607-10	PICKET SNOW FENCE		87
□ M-608-1	CURB RAMPS		88
□ M-609-1	CURBS, GUTTERS, AND SIDEWALKS	(2 SHEETS)	89-90
□ M-611-1	CATTLE GUARD	(2 SHEETS)	91-92
□ M-613-1	CONVENTIONAL HIGHWAY LIGHTING	(3 SHEETS)	93-95
□ M-613-2	HIGH MAST LIGHTING	(2 SHEETS)	96-97
□ M-614-1	RUMBLE STRIPS	(2 SHEETS)	98-99
□ M-615-1	EMBANKMENT PROTECTOR, TYPE 3		100
□ M-615-2	EMBANKMENT PROTECTOR, TYPE 5		101
□ M-616-1	INVERTED SIPHON		102
□ M-620-1	FIELD LABORATORY, CLASS 1		103
■ M-620-2	FIELD LABORATORY, CLASS 2		104
□ M-620-11	FIELD OFFICE, CLASS 1		105
■ M-620-12	FIELD OFFICE, CLASS 2		106
□ M-629-1	SURVEY MONUMENTS	(2 SHEETS)	107-108

PLAN NUMBER	S STANDARD TITLE		PAGE NUMBER
□ S-612-1	TYPICAL DELINEATOR INSTALLATIONS	(5 SHEETS)	109-113
□ S-614-1	TYPICAL GROUND SIGN PLACEMENT		114
□ S-614-2	CLASS I GROUND SIGN INSTALLATIONS		115
□ S-614-3	CLASS II GROUND SIGN INSTALLATIONS		116
□ S-614-4	CLASS III SIGNS, SHEET ALUMINUM PANELS	(3 SHEETS)	117-119
□ S-614-5	BREAK-AWAY SIGN SUPPORT DETAILS FOR GROUND SIGNS	(2 SHEETS)	120-121
□ S-614-6	CONCRETE FOOTINGS AND SIGN ISLANDS FOR CLASS III SIGNS	(2 SHEETS)	122-123
□ S-614-10	TYPICAL MARKER ASSEMBLY INSTALLATIONS		124
□ S-614-11	MILEPOST SIGN AND INSTALLATION		125
■ S-614-12	STRUCTURE NUMBER INSTALLATION (BRIDGE INFORMATION SHEET)		126
□ S-614-14	FLASHING BEACON AND SIGN INSTALLATION	(2 SHEETS)	127-128
□ S-614-20	TYPICAL POLE MOUNT SIGN INSTALLATION		129
□ S-614-21	CONCRETE BARRIER SIGN POST INSTALLATIONS		130
□ S-614-22	TYPICAL MULTI-SIGN INSTALLATIONS		131
□ S-614-40	TYPICAL TRAFFIC SIGNAL INSTALLATION DETAILS	(5 SHEETS)	132-136
□ S-614-50	OVERHEAD SIGNS MONOTUBE	(12 SHEETS)	137-148
□ S-627-1	TYPICAL PAVEMENT MARKINGS	(5 SHEETS)	149-153
□ S-630-1	TRAFFIC CONTROLS FOR HIGHWAY CONSTRUCTION	(10 SHEETS)	154-163
■ S-630-2	BARRICADES, DRUMS, CONCRETE BARRIERS (TEMP) & VERTICAL PANELS		164
■ S-630-3	FLASHING BEACON (PORTABLE) DETAILS		165

THE STANDARD PLAN SHEETS INDICATED HEREON BY A MARKED BOX ARE TO BE USED TO CONSTRUCT THIS PROJECT.

COLORADO
DEPARTMENT OF TRANSPORTATION

STANDARD PLANS LIST

M & S STANDARDS

OCTOBER 1, 2000

Computer File Information			
Creation Date:	31/Jul/96	Initials:	mcs
Last Modification Date:	27/Jul/04 14:38	Initials:	mcs
Full Path:	C:\12811 Last Chance\Roadway\Plans\		
Drawing File Name:	02spl_2000.dwg		
Acad Ver.: 16.0s (LMSoftech)	N/A	Units:	English

	Sheet Revisions		
R-1			
R-2			
R-3			
R-4			
R-5			

Colorado Department of Transportation
1420 2nd Street
Greeley CO 80631
Phone: 970-350-2135 FAX: 970-339-9530
Region 4
RKP

As Constructed
No Revisions: 09-13-05
Revised:
Void:

Standard Plans List
Designer:
Detailer:
Sheet Subset: Design
Subset Sheets: of

Project No./Code
BR 0361-064
12811
Sheet Number 2

The depth and width of the side ditch shall be varied where necessary to provide proper drainage.

Break points on slopes and in bottoms of ditches shall be rounded during construction for a pleasing appearance. See Standards for details of Cut Slope Treatment, Flaring, and Widening.

Typical Section A

Sta. 106+00 to 110+00

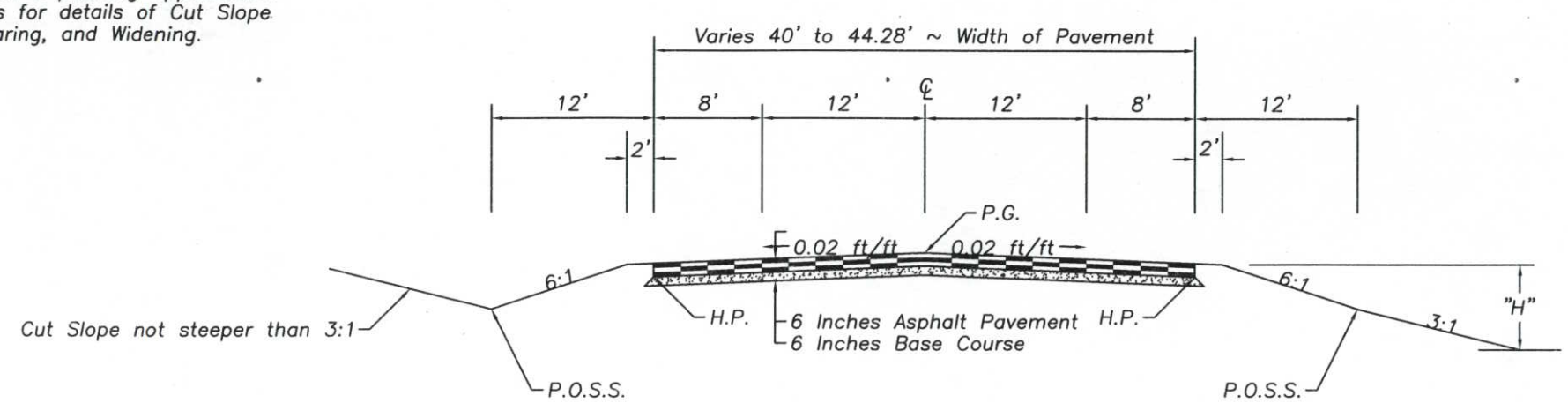

* ~ Approximate Thickness
P.G. ~ Profile Grade
H.P. ~ Hinge point
P.O.S.S. ~ Point of Slope Selection

Surfacing material shall be placed in separate courses at the following approximate thicknesses (Inches) and rates (Tons for pavement and for base course) per 100 Lin. Ft. of roadway:

	Thickness	Rate
Top Layer	2	52 – 57
Middle Layer	2	52 – 57
Bottom Layer	2-3/4	71 – 78
Base Course	6	134 – 148

All layers shall be Hot Bituminous Pavement (Gr. S) (75) (PG 64-22)
Base Course shall be Aggregate Base Course (Cl. 6)

The rates shown have been determined from information available at the time of design. Rates shall be adjusted during construction to obtain the required approximate thickness.

Computer File Information			
Creation Date: 31/Jul/96	Initials: mcs	(R-1)	
Last Modification Date: 27/Jul/04 14:47	Initials: mcs	(R-2)	
Full Path: C:\12811 Last Chance\Roadway\Plans\		(R-3)	
Drawing File Name: 03typsec1.dwg		(R-4)	
Acad Ver.: 16.0s (LMSdlexch) N/A	Units: English	(R-5)	

Sheet Revisions

Colorado Department of Transportation
CDOT
1420 2nd Street
Greeley CO 80631
Phone: 970-350-2135 FAX: 970-339-9530
Region 4
DWP

As Constructed
No Revisions: 09-13-05
Revised:
Void:

Typical Section

Designer: mcs
Detailer: mcs
Sheet Subset: Design
Subset Sheets: of

Project No./Code
BR 0361-064
12811
Sheet Number 3

The depth and width of the side ditch shall be varied where necessary to provide proper drainage.

Break points on slopes and in bottoms of ditches shall be rounded during construction for a pleasing appearance. See Standards for details of Cut Slope Treatment, Flaring, and Widening.

Typical Section B

Detour Sta. 500+00 to 516+28.84

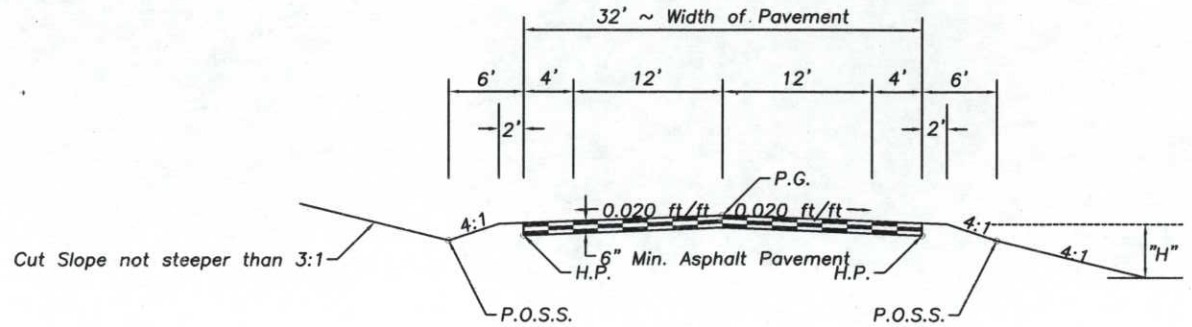

* ~ Approximate Thickness
P.G. ~ Profile Grade
H.P. ~ Hinge point
P.O.S.S. ~ Point of Slope Selection

(For Information Only)
Surfacing material shall be placed in separate courses at the following approximate thicknesses (Inches) and rates (Tons for pavement) per 100 Lin. Ft. of roadway:

	Thickness	Rate
Top Layer	2	41
Middle Layer	2	41
Bottom Layer	2	41

Hot Bituminous Pavement design for all layers shall be as determined by the Contractor, and approved by the Engineer. See Revision of Section 621 – Detour for details.

The rates shown have been determined from information available at the time of design. Rates shall be adjusted during construction to obtain the required approximate thickness.

Computer File Information		Sheet Revisions			Colorado Department of Transportation	As Constructed	Typical Section		Project No./Code
Creation Date: 31/Jul/96 Initials:mcs	R-1				DOT 1420 2nd Street Greeley CO 80631 Phone: 970-506-4949 FAX: 970-339-9530	No Revisions: 09-13-05			BR 0361-064
Last Modification Date: 27/Jul/04 14:48 Initials:mcs	R-2					Revised:	Designer: mcs		12811
Full Path: C:\12811 Last Chance\Roadway\Plans\	R-3						Detailer: mcs		
Drawing File Name: 04typsec2.dwg	R-4				Region 4 DWP	Void:	Sheet Subset: Design	Subset Sheets: of	Sheet Number 4
Acad Ver.: 16.0s (LMSdtech) N/A Units: English	R-5								

For preliminary plan quantities of surfacing materials, the following rates of applications were used:

Emul. Asphalt (Slow Setting) (Tack Coat)	@ 0.1 Gal./S.Y. (Diluted)
Bituminous Pavement	@ 115 Lbs/Sq. Yd./Inch Thick
Aggregate Base Course	@ 133 Lbs./Cu. Ft.

Diluted Emulsified Asphalt for tack coat shall consist of one part emulsified asphalt and one part water. Cost included in price of Item 403–Hot Bituminous Pavement.

Rates of application shall be determined by the Engineer at the time of application.

Any layer of bituminous pavement that is to have a succeeding layer placed thereon shall be completed full width before succeeding layer is placed, unless approved otherwise by the Engineer.

Road approaches which require bituminous pavement shall be paved as follows:

Public approaches and entrances to buildings and residences shall be paved with a 2 inch thickness of bituminous pavement 50 feet out from edge of shoulder or to the Right of Way line, whichever is less.

Field entrances shall be paved with a 2 inch thickness of bituminous pavement 4 feet out from edge of shoulder.

Depth of moisture–density control for this project shall be as follows:
Full depth of all embankments.
Bases of cuts and fills – 6 inches.

Type of compaction for this project shall be AASHTO T–99.

Excavation required for compaction for bases of cuts and fills will be considered as subsidiary to that operation and will not be paid for separately.

It is estimated that 100 hours of Blading with a motor grader in the 125 to 150 flywheel horsepower range, will be required for use as directed.

It is estimated that 4 Acres of Soil Preparation (Special) will be required on mainline slopes prior to seeding. Detour slopes will not receive any special preparation prior to seeding.

Structure Excavation and Structure Backfill for concrete box culverts and culverts will not be measured and paid for separately, but shall be included in the work.

Removal of Culvert Pipe shall include removal of metal end sections and removal of bituminous curb and rundowns.This will not be measured and paid for separately.

(R–1) The Contractor shall reference striping prior to construction, and shall place pavement marking in the same locations as existing striping. It is estimated that 18 Gal. of Epoxy Pavement Marking (11 white, 7 yellow) will be required to stripe existing roadway after detour is removed.

Rumble Strips will not be placed on this project.

Tree removal shall be completed before April 1st or after August 31st. Removal of trees or bushes outside the toe of slope will not be permitted, unless they are within the clear zone. Cut Trees shall be removed from the project within 24 hours from the start of removal. If work must take place between these dates a nesting bird survey must be completed before construction begins.

Bridge or box culvert work that may disturb nesting birds must be completed before April 1st or after August 31st. If this work must take place between these dates a nesting bird survey must be completed before construction begins.

INDEX BOOK	INDEX PAGE	INDEX SHEET	CONTRACT ITEM NO.	CONTRACT ITEM	UNIT	ROADWAY PLAN	ROADWAY AS CONST.	STR. F-22-U PLAN	STR. F-22-U AS CONST.	PROJECT TOTALS PLAN	PROJECT TOTALS AS CONST.
			202-00033	Removal of Pipe	EACH	3	3			3	3
			202-00220	Removal of Asphalt Mat * (Plan Qty. Error)	SY	553	1286*			553	1286
			202-00400	Removal of Bridge	EACH	1	1			1	1
			202-01000	Removal of Fence	LF	1,684	1692			1,684	1692
			203-00010	Unclassified Excavation (CIP) CMOZ	CY		768				768
			203-00060	Embankment Material (Complete In Place)	CY	1,478	(R-1) 2246			(R-1) 1,478	2246
			203-01100	Proof Rolling	HOUR	6	2			6	2
			203-01500	Blading	HOUR	100	6			100	6
			208-00020	Silt Fence	LF	200	235			200	235
			208-00045	Concrete Washout Structure	EACH	1	1			1	1
			208-00200	Erosion Control Supervisor	L S	1	1			1	1
			212-00006	Seeding (Native)	ACRE	4	3.6			4	3.6
			212-00047	Soil Preparation (Special)	ACRE	4	3.6			4	3.6
			213-00004	Mulching (Weed Free Straw)	ACRE	4	3.6			4	3.6
			213-00061	Mulch Tackifier	LB	800	720			800	720
			304-06000	Aggregate Base Course (Class 6)	TON	547	593.81			547	593.81
			403-33741	Hot Bituminous Pavement (Grading S) (75) (PG 64-22)	TON	780	775.33			780	775.33
			420-00130	Geotextile (Separator) (Class A) CMOZ	SY		1535				1535
			506-00218	Riprap (18 Inch)	CY	67	68			67	68
			601-03030	Concrete Class D (Box Culvert)	CY			599	599	599	599
			602-00000	Reinforcing Steel	LB			142,090	142,090	142,090	142090
			607-00005	End Post	EACH	1	1			1	1
			607-00010	Corner and Line Brace Post	EACH	2	2			2	2
			607-01000	Fence Barbed Wire with Metal Posts	LF	1,684	1692			1,684	1692
			612-00001	Delineator (Type I)	EACH	2	2			2	2
			612-00002	Delineator (Type II)	EACH	2	2			2	2
			620-00002	Field Office (Class 2)	EACH	1	1			1	1
			620-00012	Field Laboratory (Class 2)	EACH	1	1			1	1
			620-00020	Sanitary Facility	EACH	1	1			1	1
			621-00425	Detour	L S	1	1			1	1
			625-00000	Construction Surveying	L S	0.6	0.6	0.4	0.4	1	1
			626-00000	Mobilization	L S	0.6	0.6	0.4	0.4	1	1
			627-00005	Epoxy Pavement Marking	GAL	18	(R-1) 21			(R-1) 18	21
			630-00000	Flagging	HOUR	1,000	478.5			1,000	478.5

Computer File Information	
Creation Date: 27-Aug-2004	Initials:
Last Modification Date:	Initials:
Full Path: \\tsclient\C\12811 Last Chance\Roadway\Plans	
Drawing File Name: 12811_Sheet6	
AutoCAD by Autodesk	

	Sheet Revisions	
(R-1)	10-07-04	Rev Quantities	MCS

Colorado Department of Transportation
Room
4201 E. Arkansas Ave.
Denver, CO 80222
Phone:
Fax:
Region 4 Design

As Constructed	
No Revisions:	
Revised: 09-13-05	
Void:	

SUMMARY OF APPROXIMATE QUANTITIES

Designer:		Structure Numbers	
Detailer:			
Sheet Subset:		Subset Sheets:	

Project No./Code
BR 0361-064
12811
Sheet Number: 6

INDEX BOOK	INDEX PAGE	INDEX SHEET	CONTRACT ITEM NO.	CONTRACT ITEM	UNIT	ROADWAY PLAN	ROADWAY AS CONST.	STR. F-22-U PLAN	STR. F-22-U AS CONST.	PROJECT TOTALS PLAN	PROJECT TOTALS AS CONST.
			630-00007	Traffic Control Inspection	DAY	60	~~60~~98			60	~~60~~98
			630-00012	Traffic Control Management	DAY	60	39			60	39
			630-80002	Flashing Beacon (Solar)	EACH	2	2			2	2
			630-80335	Barricade (Type 3 M-A) (Temporary)	EACH	8	8			8	8
			630-80341	Construction Traffic Sign (Panel Size A)	EACH	17	12			17	12
			630-80342	Construction Traffic Sign (Panel Size B)	EACH	24	24			24	24
			630-80344	Construction Traffic Sign (Special)	SF	20	0			20	0
			630-80360	Drum Channelizing Device	EACH	82	82			82	82
			630-80363	Drum Channelizing Device (With Light) (Flashing)	EACH	2	2			2	2
				FORCE ACCOUNT ==========							
			700-70010	F/A Minor Contract Revisions	F A	1	0			1	0
			700-70022	F/A OJT Colorado Training Program	F A	1	0			1	0
			700-70025	F/A Quality Incentive Payment	F A	1	0			1	0
			700-70028	F/A ESB Program	F A	1	0			1	0
			700-70220	F/A Phone Service	F A	1	0.217 ($217.29 of $1000)			1	0.217 ($217.29 of $1000)
			700-70380	F/A Erosion Control	F A	1	0.268 ($804.25 of $3000)			1	0.268 ($804.25 of $3000)

Computer File Information	
Creation Date: 27-Aug-2004	Initials:
Last Modification Date:	Initials:
Full Path: \\tsclient\C\12811 Last Chance\Roadway\Plans	
Drawing File Name: 12811_Sheet7	
AutoCAD by Autodesk	

Sheet Revisions

Colorado Department of Transportation
Room
4201 E. Arkansas Ave.
Denver, CO 80222
Phone:
Fax:
Region 4 Design

As Constructed
No Revisions: 09-13-05
Revised: 09-13-05
Void:

SUMMARY OF APPROXIMATE QUANTITIES

Designer:
Detailer:
Structure Numbers
Sheet Subset:
Subset Sheets:

Project No./Code
BR 0361-064
12811
Sheet Number: 7

INDEX BOOK	INDEX PAGE	INDEX SHEET	LOCATION	REMOVAL OF BRIDGE EACH	UNCLASSIFIED EXCAVATION CUBIC YARD EXC	UNCLASSIFIED EXCAVATION CUBIC YARD EMB	UNCLASSIFIED EXCAVATION CUBIC YARD DITCH	REMOVAL OF BRIDGE EACH	STRUCTURE EXCAVATION * CUBIC YARD	STRUCTURE EXCAVATION * CUBIC YARD	STRUCTURE BACKFILL * CUBIC YARD CL 2	STRUCTURE BACKFILL * CUBIC YARD	REMOVAL OF PIPE EACH	AGGREGATE BASE COURSE (CL. ___) TON	HOT BITUMINOUS PAVEMENT (GR. ___) TON	AS-BUILT REMOVAL OF PIPE	CONCRETE (BOX CULVERT) CUBIC YARD CL. D	CONCRETE (BOX CULVERT) CUBIC YARD	REINFORCING STEEL LB.		CULVERT PIPE LIN. FT. cp1	"H" OVER CULV. FT.		END SECTION EACH	MISCELLANEOUS
			107+ Lt.										1			1									(Remove 12" x 32' Culvert Pipe, End Section Lt.)
			107+ Rt.		AS-CONST		AS-CONST.						1			1									(Remove 12" x 28' Culvert Pipe, End Section Rt.)
(R-1)			108+10.76	1	~~1~~	~~445~~	768	1	212		225						599	599	142,090	142,090		3			(Str. F-22-U, Double 20' x 8' CBC) *Riprap (18 Inch) ~ 67 C.Y.*
			108+ Rt.										1			1									(Remove 12" x 27' Culvert Pipe, End Section Rt.)
			PROJECT TOTALS			445		1	212		225		3			3	599	599	142,090	142,090					

* For Information Only

Computer File Information		
Creation Date: 29/Sep/00	Initials: mcs	
Last Modification Date: 06/Oct/04 10:32	Initials: mcs	
Full Path: C:\12811 Last Chance\Roadway\Plans\		
Drawing File Name: 08strqtab.dwg		
Acad Ver.: 16.0s (LMSdtech)	N/A	Units: English

	Sheet Revisions		
(R-1)	10-07-04	Uncl. Ex & Emb for CBC	MCS
(R-2)			
(R-3)			
(R-4)			
(R-5)			

Colorado Department of Transportation
DOT
DEPARTMENT OF TRANSPORTATION
1420 2nd Street
Greeley CO 80631
Phone: 970-350-2135 FAX: 970-339-9530
Region 4
DWP

As Constructed
No Revisions:
Revised: 09-13-05
Void:

Structure Quantities

Designer: mcs
Detailer: mcs
Sheet Subset: Design
Subset Sheets: of

Project No./Code
BR 0361-064
12811
Sheet Number 8

Summary of Earthwork Quantities

			AS-CONST.
EMBANKMENT MATERIAL (COMPLETE IN PLACE)			
Roadway (From Computer)			
SH 36	1033		
Structure Quantities as Embankment	445		
PROJECT TOTAL CY	1478	R-1	2246 CY
Unclassified Excavation (For Information Only)			
Roadway (From Computer)			
SH 36	582		
Structure Quantities as Excavation	0		
PROJECT TOTAL CY	582	R-1	768 CY
Compaction (AASHTO T-99) (For Information Only)			
Embankment (Net)	1033		
Est. for Base Compaction	889		
Total CY	1922	R-1	
ROADWAY QUANTITIES BALANCE (For Information Only)			
Contractor Source of Borrow Material			
Embankment x Factor (1.4)			
Embankment	1447		
Total CY	1447	R-1	

TOTALS

Note:

Embankment Material (Complete In Place) will not be remeasured; plan quantity will be paid.

For Information Only:
It is estimated the following earthwork quantities will be required for the Detour:
Embankment ~ 5314 C.Y.
Excavation ~ 3145
No adjustment was made to these computer-generated quantities for adjusting grade of Detour ends to match grade and cross slope of existing roadway.

Removal of Asphalt Mat

Location	Sq. Yd.	AS-CONST.
106+00 to 108+	294	
108+ to 110+00	259	
PROJECT TOTAL	553	1286 SY

TOTAL

Pavement shall be saw-cut to a neat line at Sta. 106+00 and Sta. 110+00, and new pavement placed flush.

Removal of bituminous curb and bituminous rundown will not be measured and paid for separately, but shall be included in the cost of Removal of Asphalt Mat.

Removal of Asphalt Mat will not be remeasured; plan quantity will be paid.

Surfacing Plan

Location	Typical Section	Length (Sta.)	Width (Feet)	Tons Hot Bit. Pvmt. Top Layer	Middle Layer	Bottom Layer	Tons Aggregate Base Course	AS-CONST.
106+00 to 108+50	A	2.5	40'	130	130	178	335	
108+50 to 110+00	A	1.5	40' to 44.28'	82	82	112	212	
Est. for Irregularities				11	11	44		
SUBTOTALS				223	223	334	547	
PROJECT TOTALS				780			547	775.33 TONS

TOTAL

Notes:

All Layers shall be Hot Bituminous Pavement (Grading S) (75) (PG 64-22)

Base Course shall be Aggregate Base Course (Class 6).

Detour Surfacing Plan (For Information Only)

Location	Typical Section	Length (Sta.)	Width (Feet)	Tons Hot Bituminous Pavement Top Layer	Middle Layer	Bottom Layer
502+55 to 513+79	B	11.24	32	461	461	461
Est. for Irregularities						47
SUBTOTALS				461	461	508
PROJECT TOTALS				1430		

Notes:

Hot Bituminous Pavement shall be as determined by the Contractor.

Stations shown are where Detour centerline crosses north edge of existing pavement.

Computer File Information		
Creation Date: 31/Jul/96	Initials: mcs	(R-1)
Last Modification Date: 27/Jul/04 14:54	Initials: mcs	(R-2)
Full Path: C:\12811 Last Chance\Roadway\Plans\		(R-3)
Drawing File Name: 09surfplan.dwg		(R-4)
Acad Ver.: 16.0s (LMSTech) Scale: N/A	Units: English	(R-5)

Sheet Revisions		
10-07-04	Rev Earthwork	MCS

Colorado Department of Transportation
1420 2nd Street
Greeley CO 80631
Phone: 970-506-4949 FAX: 970-339-9530
Region 4

DWP

As Constructed
No Revisions:
Revised: 09-13-05
Void:

Summary of Earthwork Quantities
Surfacing Plan, Detour Surfacing Plan
Removal of Asphalt Mat

Designer: mcs
Detailer: mcs
Sheet Subset: Design
Subset Sheets: of

Project No./Code
BR 0361-064
12811
Sheet Number 9

Tabulation of Delineators

Location	Side	Removal of Delineator Lin. Ft.	Delineator Type I Each	Delineator Type II Each	AS-CONST.
103+	Lt	1	1		
106+ to 107+	Rt.	4			
107+10.76	Lt & Rt			2	
107+ to 107+	Lt	5			
108+ to 109+	Rt	–			
108+ to 109+	Lt	1	1		TYPE I 2 EA.
113+					TYPE II 2 EA
PROJECT TOTALS		11 **	~~2~~	~~2~~	TOTALS

Delineators shall be JMI–375, SuperPost Fiber Glass Composite Single Piece, Driveable, Flexible, Delineator. Equivalent may be subtituted as approved by the Engineer. Half–moon shaped delineators will not be accepted. Delineators shall be placed 3 feet from edge of pavement. Adjust post length per Std. S–612–1, Typical Delineator Installations.

*** Removal of Delineators will not be measured and paid for separately, but shall be included in the work.*

The following approximate number of reflectors will be required:
White ~ 4

Removal of Guardrail (For Information Only)

Location	Side	Removal of Guardrail Lin. Ft.
106+ to 107+	Rt.	130
107+ to 107+	Lt	55
108+ to 109+	Lt	130
108+ to 109+	Rt.	56
PROJECT TOTALS		371

Removal of guardrail will not be measured and paid for separately, but shall be included in cost of Removal of Bridge.

Tabulation of Fence

Location	Side	Removal of Fence Lin. Ft.	Fence (Temporary) Lin. Ft.	Fence Barbed Wire with Metal Posts Lin. Ft.	End Post Each	Corner And Line Brace Post Each
100+00 to 116+84	Lt	1684				
100+00 to 116+84	Lt		1784			
100+00 to 116+84	Lt			1684	1	2
PROJECT TOTALS		~~1684~~	~~1784~~ *	~~1684~~	~~1~~	~~2~~
AS-CONST TOTALS		1692	1692	1692	1	2

It is also estimated that the following will be required for this project:
Orange Fence (Temporary) ~ 300 L.F. to protect existing stock pond

** All Fence (Temporary) is included in the cost of Item 621 – Detour.*
Fence (Temporary) shall be Barbed Wire With Metal Posts per Std. M–607–1.
Fence (Temporary) shall be left in place and become the property of the landowner, who will remove it later to allow seeding to remain undisturbed by livestock.

Computer File Information		
Creation Date: 31/Jul/96	Initials: mcs	(R–1)
Last Modification Date: 27/Jul/04 14:55	Initials: mcs	(R–2)
Full Path: C:\12811 Last Chance\Roadway\Plans\		(R–3)
Drawing File Name: 10ewrk.dwg		(R–4)
Acad Ver.: 16.0s (LMS Tech)	Units: English	(R–5)

Sheet Revisions

Colorado Department of Transportation
1420 2nd Street
Greeley CO 80631
Phone: 970–350–2135 FAX: 970–339–9530
Region 4

DWP

As Constructed
No Revisions: 09-13-05
Revised: 09-13-05
Void:

Tabulation of Delineators
Removal of Guardrail
Tabulation of Fence

Designer: mcs
Detailer: mcs
Sheet Subset: Design
Subset Sheets: of

Project No./Code
BR 0361–064
12811
Sheet Number 10

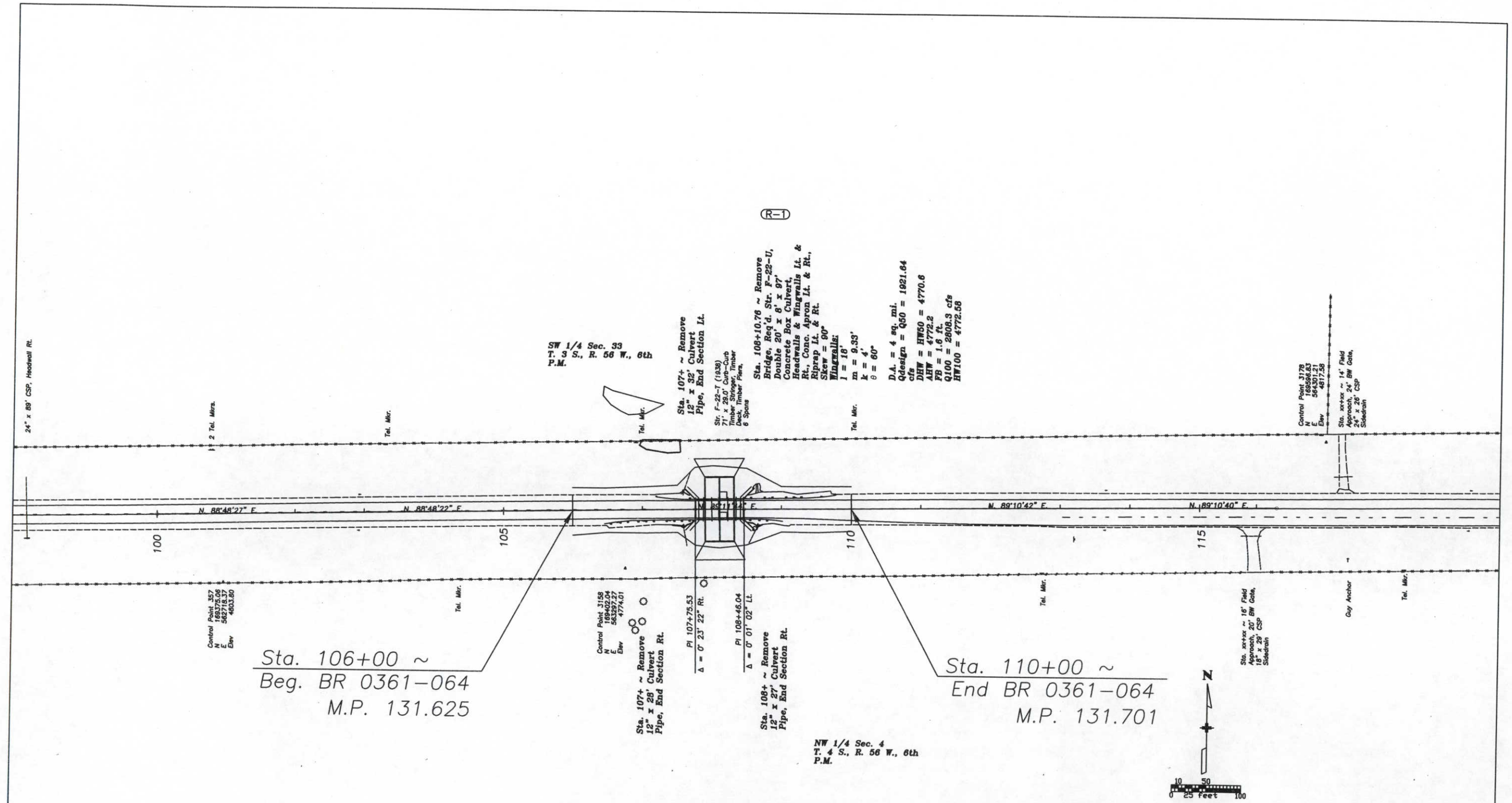

Computer File Information		
Creation Date:	31/Jul/96	Initials: mcs
Last Modification Date:	06/Oct/04 10:45	Initials: mcs
Full Path:	C:\12811 Last Chance\Roadway\Plans\	
Drawing File Name:	11plan_roadway.dwg	
Acad Ver.: 16.0s (LMSoftech)	Units:	English

	Sheet Revisions		
R-1	10-07-04	CBC Station	MCS
R-2			
R-3			
R-4			
R-5			

Colorado Department of Transportation
DOT
DEPARTMENT OF TRANSPORTATION
1420 2nd Street
Greeley CO 80631
Phone: 970-350-2135 FAX: 970-339-9530
Region 4 DWP

As Constructed	
No Revisions:	
Revised:	09-13-05
Void:	

Roadway Plan Sheet

Designer:	mcs		
Detailer:	mcs		
Sheet Subset:	Design	Subset Sheets:	of

Project No./Code
BR 0361-064
12811
Sheet Number 11

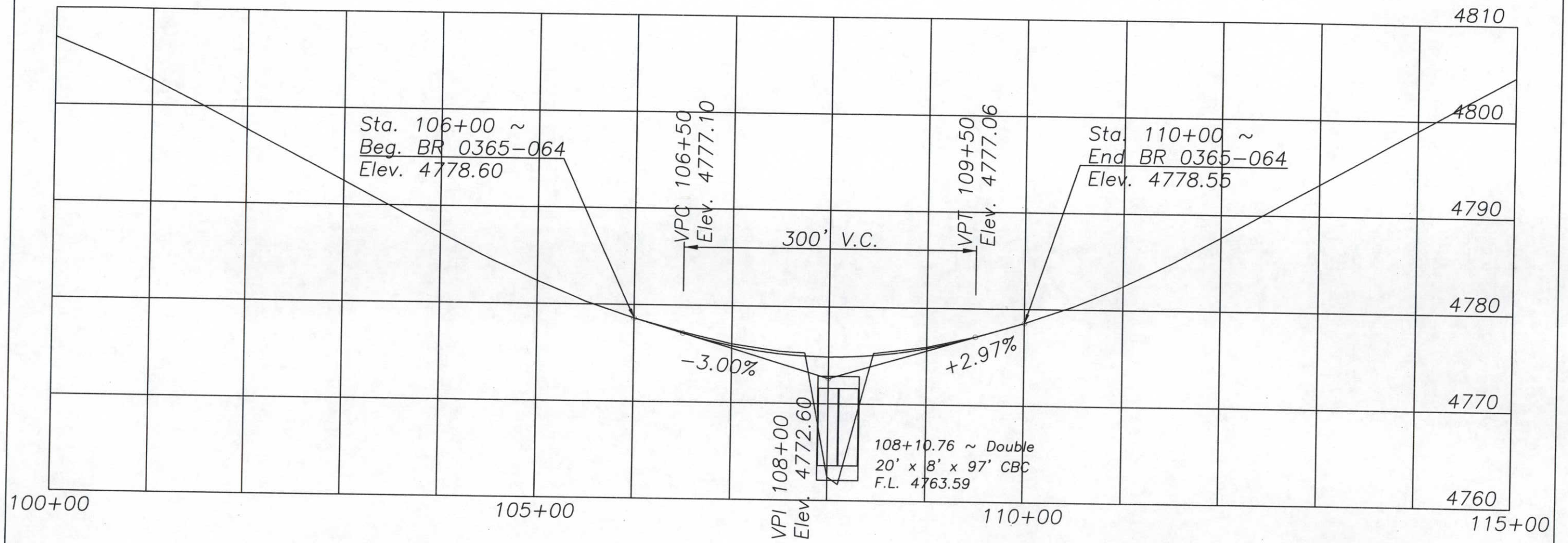

Adjust Profile Grade as and cross slopes necessary to assure a smooth butt joint with existing pavement at each end of the project.

Computer File Information		
Creation Date: 31/Jul/96 Initials:mcs	(R-1)	
Last Modification Date: 27/Jul/04 14:59 Initials:mcs	(R-2)	
Full Path: C:\12811 Last Chance\Roadway\Plans\	(R-3)	
Drawing File Name: 12profile_roadway.dwg	(R-4)	
Acad Ver.: 16.0s (LMSoftech) Units: English	(R-5)	

Sheet Revisions		
10-07-04	Profile Grade, Vert Curve	MCS

Colorado Department of Transportation
CDOT
Region 4
1420 2nd Street
Greeley CO 80631
Phone: 970-350-2135 FAX: 970-339-9530
DWP

As Constructed
No Revisions: 09-13-05
Revised: 09-13-05
Void:

Roadway Profile Sheet

Designer: mcs
Detailer: mcs
Sheet Subset: Design
Subset Sheets: of

Project No./Code
BR 0361-064
12811
Sheet Number 12

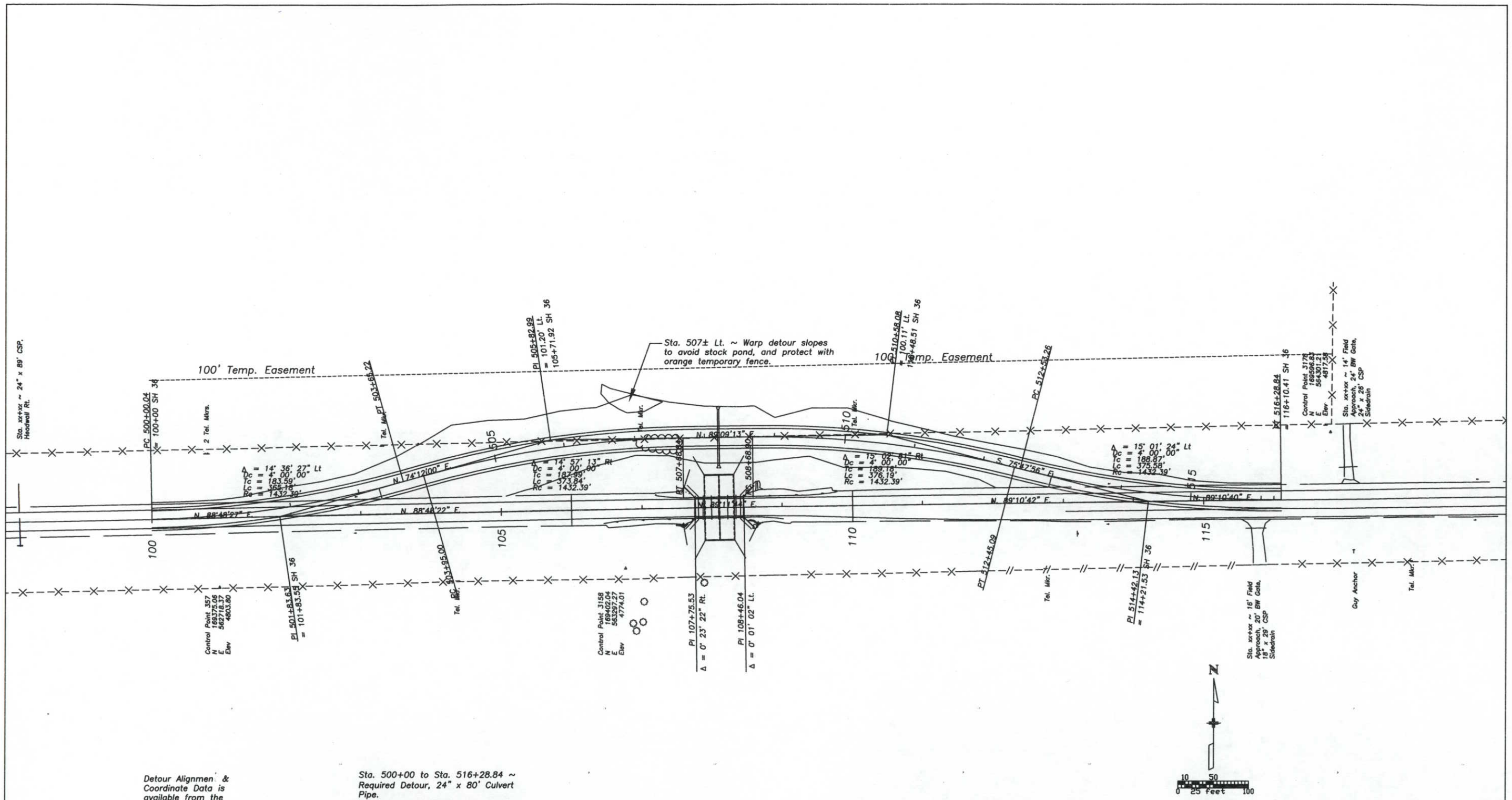

Detour Alignment & Coordinate Data is available from the Engineer.

Sta. 500+00 to Sta. 516+28.84 ~ Required Detour, 24" x 80' Culvert Pipe.

Approx. Sta. 500+00 to 503+30 and Sta. 513+00 to Sta. 516+28.84 ~ Adjust profile grade and cross slope of Detour to match slope of existing pavement.

Computer File Information		
Creation Date: 31/Jul/96	Initials: mcs	(R-1)
Last Modification Date: 27/Jul/04 15:00	Initials: mcs	(R-2)
Full Path: C:\12811 Last Chance\Roadway\Plans\		(R-3)
Drawing File Name: 13plan_detour.dwg		(R-4)
Acad Ver.: 16.0s (LMSdtech)	Units: English	(R-5)

Sheet Revisions		

Colorado Department of Transportation

DOT

1420 2nd Street
Greeley CO 80631
Phone: 970-350-2135 FAX: 970-339-9530

Region 4 DWP

As Constructed	
No Revisions: 09-13-05	
Revised:	
Void:	

Detour Plan Sheet

Designer:	mcs		
Detailer:	mcs		
Sheet Subset:	Design	Subset Sheets:	of

Project No./Code
BR 0361-064
12811
Sheet Number 13

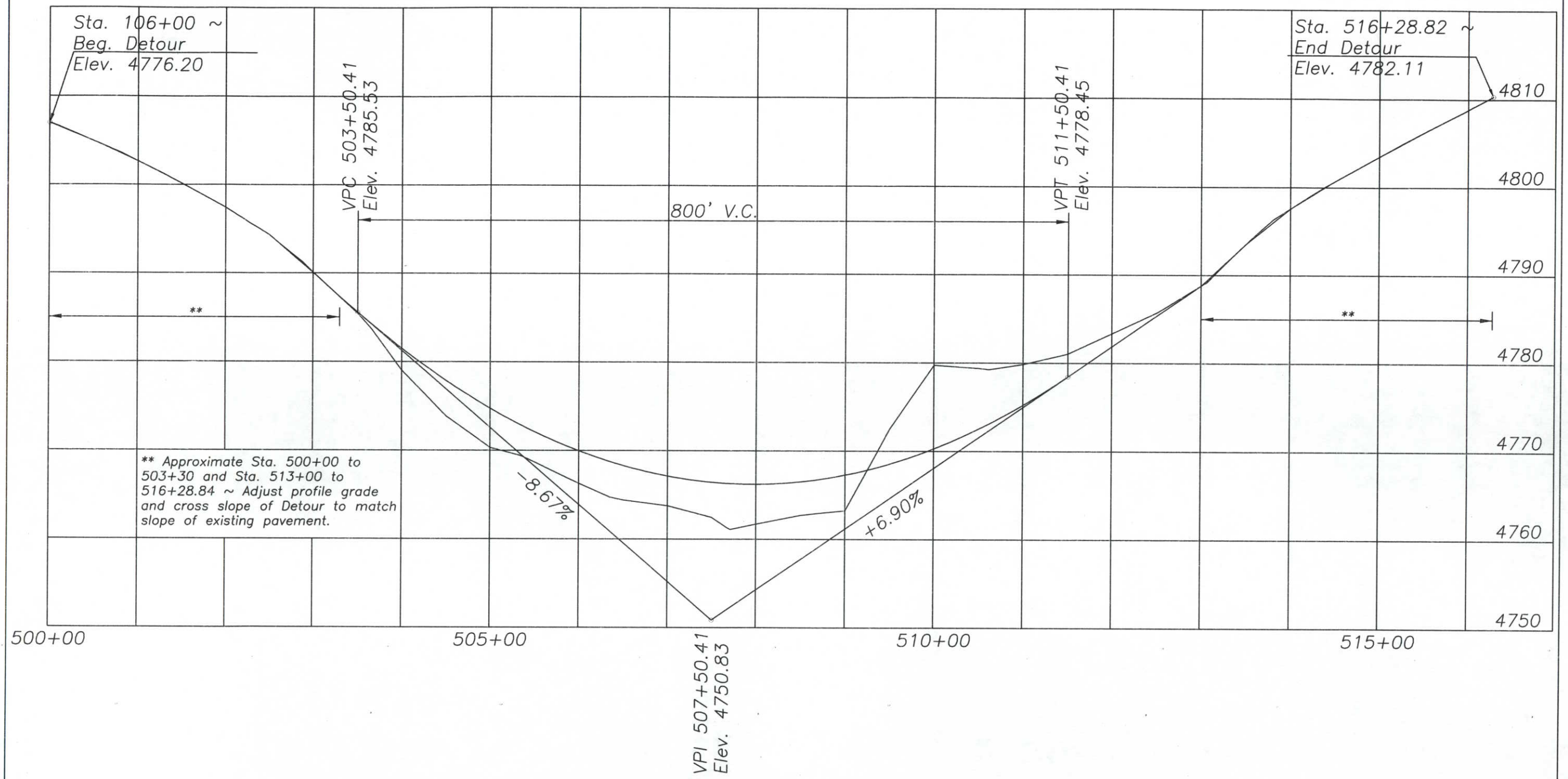

Computer File Information		
Creation Date: 31/Jul/96	Initials: mcs	
Last Modification Date: 27/Jul/04 15:01	Initials: mcs	
Full Path: C:\12811 Last Chance\Roadway\Plans\		
Drawing File Name: 14profile_detour.dwg		
Acad Ver.: 16.0s (LMSoftech)	Units: English	

	Sheet Revisions	
R-1		
R-2		
R-3		
R-4		
R-5		

Colorado Department of Transportation
CDOT
1420 2nd Street
Greeley CO 80631
Phone: 970-350-2135 FAX: 970-339-9530
Region 4 DWP

As Constructed
No Revisions: 09-13-05
Revised:
Void:

Detour Profile Sheet

Designer: mcs
Detailer: mcs
Sheet Subset: Design
Subset Sheets: of

Project No./Code
BR 0361-064
12811
Sheet Number 14

CONSTRUCTION SIGNING

SEE M&S TYPICAL APPLICATION CASE IV (S-630-1, SHEET 3),
GENERAL NOTES (S-630-1, SHEET 9), AND
TYPICAL CONSTRUCTION ZONE SIGNS (S-630-1, SHEET 10)

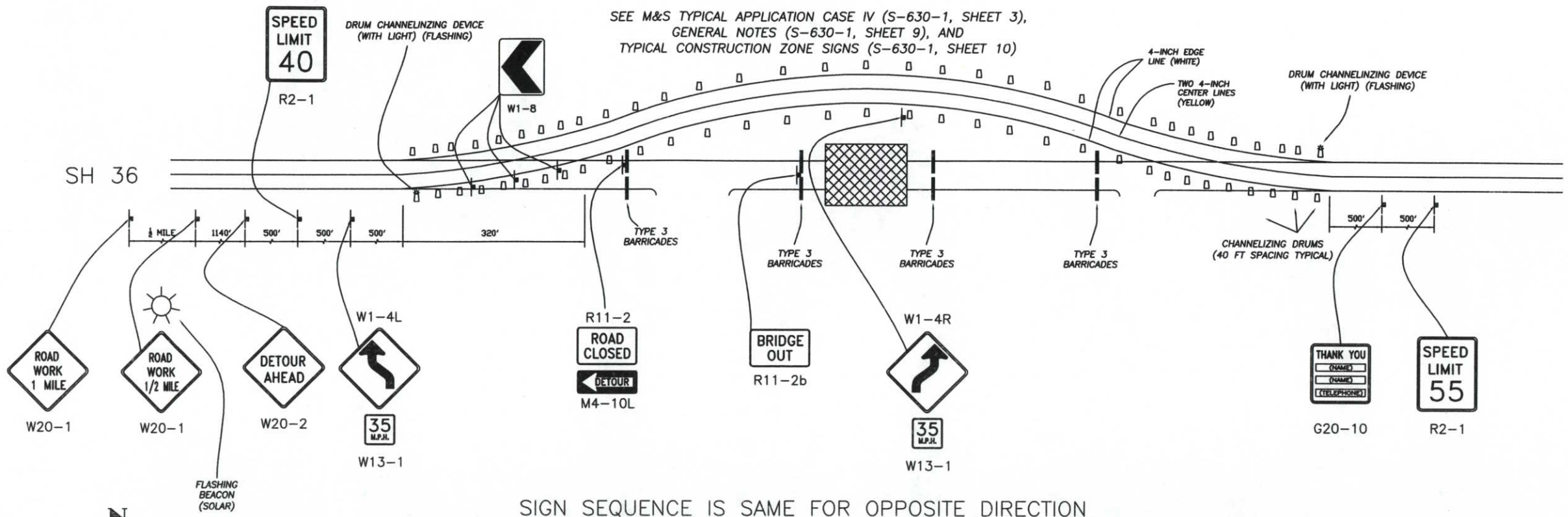

SIGN SEQUENCE IS SAME FOR OPPOSITE DIRECTION

NOT TO SCALE

SIGN CODE	LEGEND	SIGN PANEL SIZE	BACK-GROUND COLOR	QUANTITY PANEL SIZE A	QUANTITY PANEL SIZE B	QUANTITY ~~PANEL SIZE C~~
W20-1	ROAD / WORK / 1 MILE	48x48	ORANGE		2	
W20-1	ROAD / WORK / 1/2 MILE	48x48	ORANGE		2	
W20-1	DETOUR / AHEAD	48x48	ORANGE		2	
R2-1	SPEED / LIMIT / 40	36X48	WHITE		2	
W1-4L	(LEFT REVERSE CURVE)	48x48	ORANGE		2	
W13-1	(ADVISORY SPEED) 35	24x24	ORANGE	4		
W1-8	CHEVRON	18X24	ORANGE	6		
R11-2	ROAD / CLOSED	48x30	ORANGE		2	
M4-10L	DETOUR (IN ARROW) L	48x18	ORANGE	1		
M4-10R	DETOUR (IN ARROW) R	48x18	ORANGE	1		
R11-2b	BRIDGE / OUT	48x30	ORANGE		2	
W1-4R	(RIGHT REVERSE CURVE)	48x48	ORANGE		2	
G20-10	THANK YOU ...	48x48	ORANGE		2	
R2-1	SPEED / LIMIT / 55	36X48	WHITE		2	
W20-7a	FLAGGER AHEAD	48x48	ORANGE		2	
W20-4	ONE LANE / ROAD / AHEAD	48x48	ORANGE		2	
W8-9a	SHOULDER / DROPOFF	30x30	ORANGE	2		
W8-1	BUMP	30x30	ORANGE	2		
SIGN TOTALS				17	24	

OTHER DEVICES			
ITEM CODE	ITEM	UNITS	AMOUNT
630	Flashing Beacon (Solar)	EACH	2
630	Barricade (Type 3 M-A) (Temporary)	EACH	8
630	Drum Channelizing Device	EACH	82
630	Drum Channelizing Device (With Light) (Flashing)	EACH	2

FOR INFORMATION ONLY

DETOUR STRIPING PAINT QUANTITIES			
LINE TYPE AND COLOR	TOTAL LENGTH (LF)	AREA (SF)	VOLUME OF PAINT (GAL)*
TWO 4-INCH WHITE EDGE LINES	1629	1086	10.86
TWO 4-INCH YELLOW CENTER LINES	1629	1086	10.86

* ASSUMES COVERAGE OF 100 SF/GAL

SIGN CODE	LEGEND	PANEL SIZE (INCHES)	QUANTITY	TOTAL S.F.
SPECIAL	CAUTION/STEEP GRADE/AHEAD	60 x 48	1	20
	PROJECT TOTALS			20

Computer File Information		
Creation Date: 31/Jul/96	Initials: mcs	(R-1)
Last Modification Date: 27/Jul/04 15:02	Initials: dpt	(R-2)
Full Path: C:\12811 Last Chance\Traffic\Plans\		(R-3)
Drawing File Name: CONSTRUCTION SIGNING02.dwg		(R-4)
Acad Ver.: 16.0s (LMSTech)	Units: English	(R-5)

Sheet Revisions

Colorado Department of Transportation
1420 2nd Street
Greeley CO 80631
Phone: 970-350-2135 FAX: 970-339-9530
Region 4 DWP

As Constructed
No Revisions: 09-13-05
Revised:
Void:

Construction Signing
Designer:
Detailer:
Sheet Subset: Traffic
Subset Sheets: of

Project No./Code
BR 0361-064
12811
Sheet Number 15

STORMWATER MANAGEMENT PLAN – ADDITIONAL INFORMATION

Estimated Runoff coefficient
Pre-construction: 0.65 Post-construction: 0.65

Existing data describing soil or quality of discharge: Loam soil

Existing vegetation: Native upland grasses

Proposed sequence for major activities, location of any other potential pollution source, areas used for storage of building materials, soils or wastes, and location of any dedicated asphalt or concrete batch plants: see water quality and erosion control specifications, and documents submitted by the contractor at the preconstruction conference.

100-year Flood plain boundaries: see bridge hydraulic information sheet (if existent).

Description of the construction activity, estimate of the total site area and of the area expected to undergo excavation, and name of the receiving water: see CDPS stormwater permit application.

Site map and construction site boundaries: see title sheet

Areas of cuts and fills and areas of soil disturbance: see plan and profile sheets and roadway cross sections.

Surface waters: see title sheet and bridge hydraulic information sheet (if existent)

Materials handling and spill prevention: see water quality specification (107.25).

Inspection and maintenance: see erosion control specifications (107.25 or 208).

Contract Document location of erosion control and stormwater quality management measures not referenced above nor included on the Stormwater Management Plan Sheet(s):

NOTES

The Erosion control supervisor shall be a person other than the Project superintendent

Washing out concrete trucks shall be limited to specific sites pre-approved by the Engineer. Concrete saw water shall not be allowed to enter any waterways, wetlands or inlets. Water shall be collected, contained and disposed of as directed by the Engineer.

Disturbed surfaces shall be left in a roughened condition at all times.

Placement of seed, mulch and mulch tackifier will not be done in a single operation, but shall be completed after each construction phase. It is estimated that 2 or more mobilizations shall be required and shall be included in the price of the work.

If dewatering is required, the contractor will be responsible for obtaining a dewatering or infiltration permit from the Colorado Department of Health.

DETOUR

Upon completion of detour, side slopes shall be stabilized by seeding oats (Avena sativa) onto the slope. Seeding and mulching application shall be per the native seeding plan. Addition of soil preparation will not be required for temporary seeding. It is estimated that 2.5 acres of seeding (temporary) will be required.

It is estimated that 200 LF of silt fence will be required at detour toe of slopes to prevent sediment from entering drainage.

Inspections shall be frequent and repairs/or replacements of erosion control measures shall be made promptly as needed or as directed by the Engineer, All silt fence shall be inspected following each rainfall and silt shall be cleaned out when the silt depth exceeds 50% of the silt fence height. The cost for silt removal shall be included in he price of the work.

NOXIOUS WEEDS

Contractor's vehicles shall be inspected prior to construction to ensure that they are free of soil and debris capable of transporting noxious weed seeds or roots onto the site.

NATIVE SEEDING

Soil preparation, seeding, mulching and mulch tackifier will be required for an estimated 8.0 acres of disturbed area within the right-of-way limits which are not surfaced. The following types and rates shall be used:

COMMON NAME	BOTANICAL NAME	LBS PLS/ACRE
Western wheatgrass	Pascopyrum smithii "Arriba"	8.0
Buffalograss	Buchloe dactyloides "Texoka"	5.0
Blue grama	Bouteloua gracilis "Hachita"	1.5
Sideoats grama	Bouteloua curtipendula "Vaughn"	1.0
Green needlegrass	Nassella viridula "Lodorm"	3.0
Sand dropseed	Sporobolus cryptandrus	0.1
Little bluestem	Schizachyrium scoparium "Pastura"	1.0
Narrowleaf penstemon	Penstemon angustifolius	0.2
Purple prairie clover	Dalea purpureum var. purpureum	1.0
Gaillardia	Gaillardia aristata	1.0
Blue flax	Linum lewisii	0.5
Dotted gayfeather	Liatrus punctata	0.3
Oats	Avena sativa	3.0
TOTAL		25.6

SEEDING APPLICATION: Drill seed .25" to .5" into the topsoil where possible. In areas not accessible to a drill hand broadcast at triple the above rate and rake .25" to .5" into the topsoil.

MULCHING APPLICATION: 1.5 tons of certified weed free hay per acre mechanically crimped into the topsoil in combination with an organic mulch tackifier per special provision 213.

Due to high failure rates, hydromulching and hydroseeding will not be allowed.

Fertilizer will not be used on the project site.

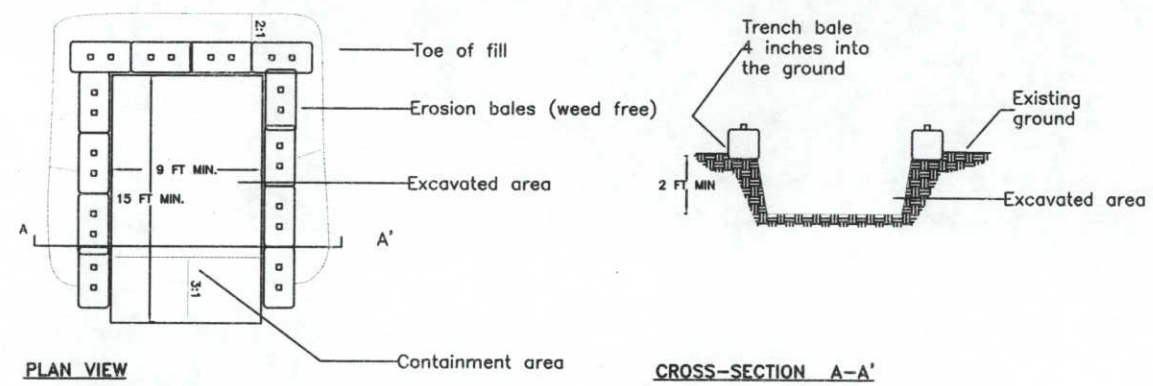

PLAN VIEW CROSS-SECTION A-A'

CONCRETE WASHOUT STRUCTURE

PROJECT TOTALS:

PAY ITEM	DESCRIPTION	UNIT	QUANTITY ROADWAY	DETOUR*
208	CONCRETE WASHOUT STRUCTURE	EACH	1 1	
208	EROSION CONTROL SUPERVISOR	EACH	1 1	
208	SILT FENCE	LF	~~200~~ 235	
212	SEEDING (NATIVE)	ACRE	~~4.0~~ 3.6	4.0
212	SEEDING (TEMPORARY)	ACRE	0	2.5
213	MULCHING (WEED FREE HAY)	ACRE	~~4.0~~ 3.6	6.5
213	MULCH TACKIFIER	LB	~~800~~ 720	1300
700	EROSION CONTROL	FA	~~1~~ 0.485	

*Items included in the cost of the detour.

Computer File Information			Sheet Revisions			Colorado Department of Transportation	As Constructed	Stormwater Management Plan		Project No./Code
Creation Date: July 04	Initials: CVC	(R-1)				1420 2nd Street Greeley, CO 80631 Phone: 970-350-2135 FAX: 970-339-9530	No Revisions: 09-13-05			BR 0361-064
Last Modification Date:	Initials:	(R-2)					Revised: 09-13-05	Designer: CVC		12811
Full Path: Region 4\washington		(R-3)						Detailer: CVC		
Drawing File Name: 12811sdlastchance		(R-4)				Region 4 DWP	Void:	Sheet Subset:	Subset Sheets: of	Sheet Number 16
Acad Ver.: 2004 Scale:	Units: English	(R-5)								

TO ESTABLISH GEOMETRIC CONTROL FOR THE CONSTRUCTION OF THIS PROJECT, THE DEPARTMENT HAS PROVIDED THE FOLLOWING INFORMATION:

	Format*
■ Horizontal Control	Computer files
■ Vertical Control	" " "
■ Roadway Alignment	" " "
■ Original Terrain Data	" " "
☐ Other:	

*Specify the information format, ie., plan sheet, computer disk, computer printout, or other.
The information marked is either contained on the plans or is available from the Engineer.

TYPE OF PROJECT
- ☐ Landscaping
- ☐ Signalization
- ☐ Safety Improvement
- ☐ Asphalt Overlay
- ☐ Concrete Overlay
- ☐ Minor Widening
- ☐ Major Reconstruction
- ☐ New Roadway Construction
- ■ Bridge Replacement
- ☐ Bridge Widening
- ☐ New Bridge
- ☐ Other:

SURVEY WORK TO BE PERFORMED BY OTHERS: _____

WORK PERFORMED BY THE CONTRACTOR'S SURVEYOR UNDER ITEM 625:

- ___ ■ Establish and Maintain Project Centerline or Engineer Approved Offset Line(s)
- ___ ■ Verification and Maintenance of Horizontal and Vertical Control
- ___ ■ Verify or Determine existing grades and alignments
- ___ ☐ Verify or Determine existing topography
- ___ ■ Clearing and Grubbing Limits
- ___ ■ Removal Limits
- ___ ☐ Reset Items

___ ■ Excavation and Embankment
- ___ ■ Excavation
  - ___ ■ Unclassified
  - ___ ☐ Stripping
  - ___ ☐ Muck
  - ___ ☐ Rock
  - ___ ☐ Borrow
  - ___ ☐ Other:
- ___ ■ Embankment
- ___ ☐ Site Grading
- ___ ☐ Erosion Control (Perm)
- ___ ☐ Other: _____
- ___ ☐ As Staked Earthwork Quantities (See General Notes)

	SLOPE STAKING (Y/N)	GRID (Y/N)	GRADE STAKES	SPECIAL INTERVAL
Excavation			X	
Embankment				

___ ☐ Landscaping
- ___ ☐ Top Soil
- ___ ☐ Seeding
- ___ ☐ Mulching
- ___ ☐ Planting
- ___ ☐ Herbicide_____
- ___ ☐ Other: _____

___ ☐ Erosion Control
- ___ ☐ Seeding (Temp)
- ___ ☐ Silt Fences
- ___ ☐ Straw Bales
- ___ ☐ Temporary Berm
- ___ ☐ Riprap (Temp)
- ___ ☐ Other (Temp Diversion, Temp Slope Drain, Brush Barrier, Check Dam, Other:_____)

___ ■ Roadway Bases
- ___ ■ Untreated Subgrade
- ___ ☐ Treated Subgrade
- ___ ■ Aggregate Base Course
- ___ ☐ Reconditioning
- ___ ☐ PMBB – Plant Mix Bituminous Base
- ___ ☐ Other: _____

___ ■ Pavements
- ___ ■ HBP – Hot Bituminous Pavement
- ___ ☐ Concrete
- ___ ☐ Overlay
- ___ ☐ Heating & Scarifying Treatment
- ___ ☐ Prime Coat, Tack Coat & Rejuvenating Agent
- ___ ☐ Seal Coat or Chip Seal
- ___ ☐ Other: _____

	GRID (Y/N)	SPECIAL INTERVAL	SPECIAL OFFSET	GRADE (Y/N)
Roadway Bases				Y Y
Pavements				Y

___ ☐ Roadway Elements
- ___ ☐ Curb and Gutter
- ___ ☐ Drop inlets – alignment and grades
- ___ ☐ Retaining Walls
- ___ ☐ Guard Rail
- ___ ☐ Sidewalk
- ___ ☐ Other: _____

	Tangent Interval	Curve Interval	Special Offset
Curb & Gutter			

___ ☐ Riprap (Perm)

___ ☐ Slope and Ditch Paving

___ ☐ Minor Structures
- ___ ☐ Structure Excavation limits
- ___ ☐ Culverts
- ___ ☐ Culverts w/ Headwalls and Wingwalls
- ___ ☐ Concrete Box Culverts w/ Headwalls and Wingwalls
- ___ ☐ Pipes
  - ___ ☐ Sanitary Sewer
  - ___ ☐ Storm Sewer
  - ___ ☐ Water
  - ___ ☐ Irrigation
  - ___ ☐ Miscellaneous
- ___ ☐ Manholes
- ___ ☐ Inlets
- ___ ☐ Other: _____

___ ■ Major Structures – Overhead Signs, Concrete Box Culverts, Bridges – and all other structures assigned a structure number
- ___ ■ Structure Excavation limits
- ___ ■ Concrete Box Culverts w/ Headwalls and Wingwalls
- ___ ☐ Piling locations and cut off elevations
- ___ ☐ Caisson locations and elevations
- ___ ☐ Footing locations, alignment, and elevations
- ___ ☐ Abutment/Pier locations, alignment, and elevations
- ___ ■ Wingwall skew angles/offsets
- ___ ☐ Structural concrete form locations
- ___ ☐ Substructure As-constructed survey (Required by Subsection 601 .12 for Bridges and S-614-50 for Overhead signs)
- ___ ☐ Bridge expansion joint(s) alignment and grade (longitudinal and transverse)
- ___ ☐ Deck grades at Girder 10th or "n" th point locations and elevations
- ___ ☐ Slope and Ditch Paving
- ___ ☐ Other: _____

___ ■ Fencing
- ___ ■ Temporary
- ___ ■ Permanent
- ___ ☐ Sound Barriers
- ___ ☐ Other: _____

___ ☐ Delineators
- ___ ☐ Temporary
- ___ ☐ Permanent

___ ☐ Lighting and Traffic Control Devices (Perm)
- ___ ☐ Signal pole locations and elevations
- ___ ☐ Light pole locations and elevations
- ___ ☐ Signs
- ___ ☐ Field verify sign post locations, elevations, and lengths before fabrication.
- ___ ☐ Other: _____

___ ■ Pavement Marking
- ___ ■ Striping (Temp)
- ___ ■ Striping (Perm)
- ___ ☐ Symbols
- ___ ☐ Other: _____

___ ☐ Temporary Lighting and Construction Traffic Control Devices
- ___ ☐ Signal pole locations and elevations (Temp)
- ___ ☐ Light pole locations and elevations (Temp)
- ___ ☐ Signs (Temp)
- ___ ☐ Other: _____

___ ■ Easement (Temp)(Staking)(P.L.S. Only)

___ ☐ Right of Way (Temp) (Staking)(P.L.S. Only)

WORK PERFORMED BY THE CONTRACTOR'S SURVEYOR UNDER ITEM 629:

___ ☐ Monumentation
- ___ ☐ Control
- ___ ☐ Right of Way
- ___ ☐ Land corners, Aliquot corners
- ___ ☐ Easement (Perm)
- ___ ☐ Reference the specified existing monuments: ** _____
- ___ ☐ Relocate the specified existing monuments: ** _____
- ___ ☐ Locate monuments. It is estimated ____ hours are required.

** A Tabulation of Survey Monuments may be provided on the plans.

GENERAL NOTES:

Unless indicated otherwise on this Survey Tabulation Sheet, all survey work and staking intervals shall be done in accordance with the latest edition of the entire CDOT Survey Manual.

Adequate information for establishing lines, grades, and locations for all work items have been specified on the plans. Any additional information required to stake the item or element shall be generated by the Contractor's surveyor.

The Contractor's surveyor shall provide an estimate of the man-hours necessary to complete the work items indicated on this sheet. A copy of this sheet, with the estimated man-hours written on the blank line to the left of the specified items, shall be submitted with the Survey Schedule to the Engineer __3__ days prior to Presurvey Conference – Construction Survey.

Stakes and Monuments which are damaged or destroyed by the progress of construction shall be replaced by the Contractor at no additional cost to the Department.

The Contractor shall furnish an As Staked earthwork quantity to the Engineer prior to completion of twenty percent (20%) of the planned earthwork in any phase as per the CDOT Survey Manual. A printed copy of the As Staked earthwork data and a computer disk in the specified format shall be submitted to the Engineer. The Contractor shall field verify original ground cross sections at a maximum 500 feet intervals.

Prior to beginning work on any subsequent operation, such as placing base course or paving, the Contractor shall certify in writing to the Engineer that the final grade is within specified tolerance.

The Contractor's surveyor shall perform all field surveying and calculations necessary to tie plan grades into field grades.

The Contractor shall coordinate construction staking on the project with any utility work.

The Contractor's surveyor shall submit the following fieldbooks to the Engineer:
- ■ Horizontal Control (Primary & Secondary)
- ■ Vertical Control (i.e. Benchmarks)
- ☐ Property Pin Ties
- ■ Horizontal Alignment
- ■ Grading
- ■ Slope Staking
- ☐ Minor Structures
- ■ Major Structures
- ■ One fieldbook for each work category shown on this sheet
- ☐ Other Fieldbook(s): _____

Computer File Information		Sheet Revisions		
Creation Date: 31/Jul/96 Initials:mcs	(R-1)			
Last Modification Date: 13/Aug/04 13:45 Initials:mcs	(R-2)			
Full Path: C:\12811 Last Chance\Roadway\Plans\	(R-3)			
Drawing File Name: 17Survtab.dwg	(R-4)			
Acad Ver.: 16.0s (LMSdlech) N/A Units: English	(R-5)			

Colorado Department of Transportation
1420 2nd Street
Greeley CO 80631
Phone: 970-350-2135 FAX: 970-339-9530
Region 4 DWP

As Constructed
No Revisions: 09-13-05
Revised:
Void:

Roadway Cross Sections

Designer: mcs
Detailer: mcs
Sheet Subset: Design
Subset Sheets: of

Project No./Code
BR 0365-064
12811
Sheet Number 17

ATE OF COLORADO
D.O.T. FORM 126Ra
VISED: JULY 1996

COLORADO DEPARTMENT OF TRANSPORTATION

DOT — DEPARTMENT OF TRANSPORTATION

Region 4
Address: 1420 2nd Street
Greeley, CO 80631
Phone: (970) 350-2153 FAX: (970) 350-2178

RIGHT OF WAY PLANS UNIT: David G. Mantych

Sheet Revisions	
NO. REVISIONS	09-13-05

N

0 50 100 150 200 250
SCALE 1" = 200'

RIGHT OF WAY PLAN
TITLE / TAB / MONUMENTATION / PLAN SHEET
PROJECT NUMBER: BR 0361-064
PROJECT LOCATION: At Draw w/o Last Chance
PROJECT LOCATION:

Project Code:	Last Mod. Date	Subset Sheets	Sheet No.	Total No. of Sheets
12811	07-08-04	1 of 1	1	1

DEPARTMENT OF TRANSPORTATION
FEDERAL HIGHWAY ADMINISTRATION

AUTHORIZED: _____ DATE

DIVISION ADMINISTRATOR

DEPARTMENT OF TRANSPORTATION
STATE OF COLORADO

RIGHT OF WAY PLAN OF PROPOSED

FEDERAL AID PROJECT NO. BR 0361-064
STATE HIGHWAY NO. 36
WASHINGTON COUNTY
RIGHT OF WAY

LENGTH OF PROJECT: 1687.25 FEET

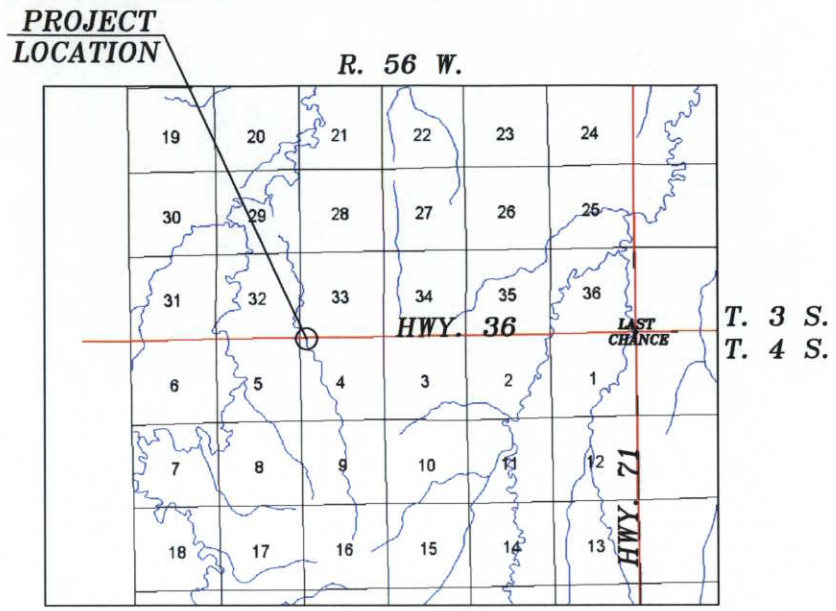

VICINITY MAP – N.T.S.

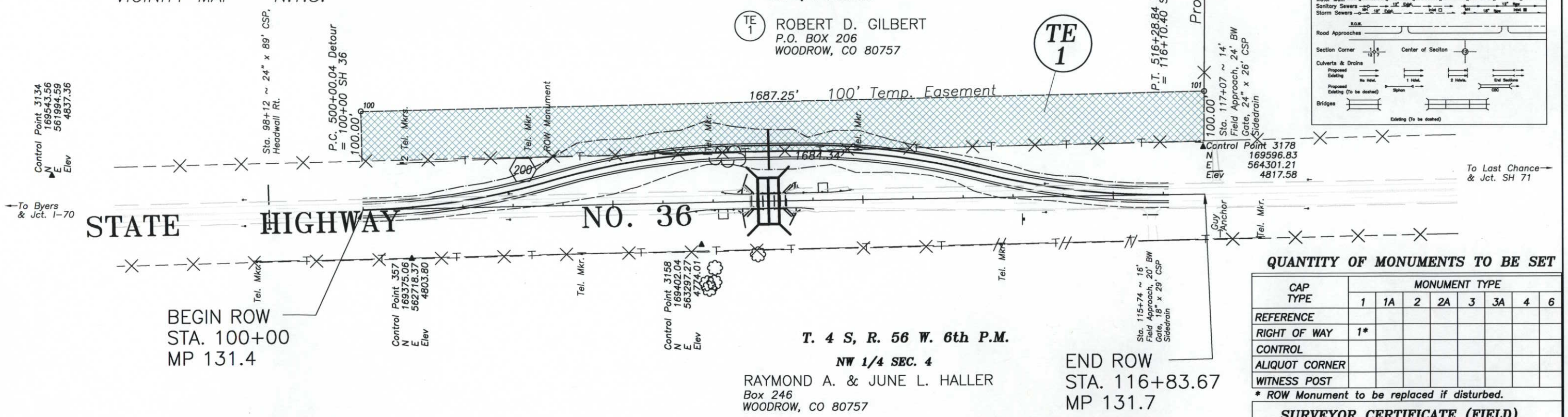

CONVENTIONAL SIGNS

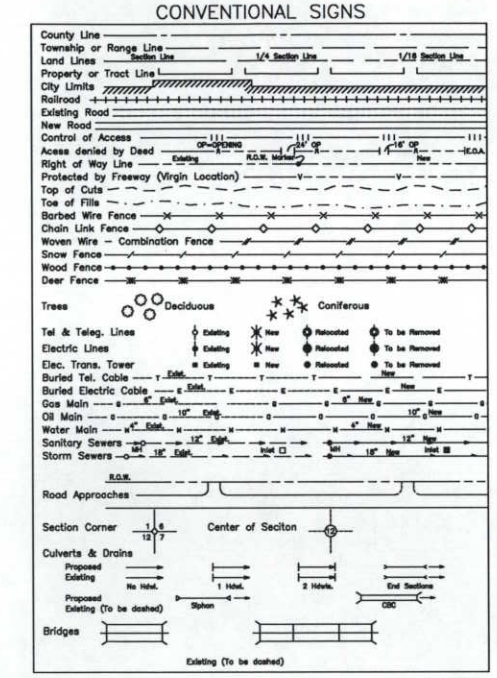

QUANTITY OF MONUMENTS TO BE SET

CAP TYPE	MONUMENT TYPE 1	1A	2	2A	3	3A	4	6
REFERENCE								
RIGHT OF WAY	1*							
CONTROL								
ALIQUOT CORNER								
WITNESS POST								

* ROW Monument to be replaced if disturbed.

TABULATION OF EASEMENT POINTS FOR INFORMATION PURPOSES ONLY

POINT NO.	NORTHING	EASTING
100	169670.4162	562616.7120
101	169707.8642	564303.5473
200*	169579.550	563001.9400

R.O.W. TABULATION OF PROPERTIES IN WASHINGTON COUNTY S.H. 36

PARCEL NO.	OWNER	ADDRESS	LOCATION	PARCEL AREA	REMARKS	RECORDING INFORMATION
TE-1	ROBERT D. GILBERT	P.O. BOX 206 WOODROW, CO 80757	W 1/2 SW 1/4 SEC. 33 T. 3 S., R. 56 W.	168544 SF (3.87 ACRES)	FOR DETOUR	

SURVEYOR CERTIFICATE (FIELD)

Control Survey and Monumentation was done under my supervision and checking.

NAME _____ P.L.S. NO. _____

DATE _____

SURVEYOR CERTIFICATE (OFFICE)

R.O.W. Plans and Legal Descriptions were prepared under my supervision and checking.

NAME _____ P.L.S. NO. _____

DATE _____

C:\gprojects\12811\12811all.dwg, 8/26/2004 4:46:28 PM, \\R4NTB\GREHPC