TITLE SHEET

STATE DEPARTMENT OF HIGHWAYS
DIVISION OF HIGHWAYS — STATE OF COLORADO

R.O.W. NECESSARY WAS ACQUIRED UNDER PREVIOUS PROJECTS AND BY THE DEVELOPER.

FEDERAL ROAD REGION NO.	DIVISION	PROJECT NO.	SHEET NO.
VIII	COLORADO	CC 07-0036-12	1

AS CONSTRUCTED

NO REVISIONS 8-10-84 REVISED ____ VOID ____

DIST. IV	FILE	COPY
DIST. ENGR.		
ASST. ENGR.		
CONSTR.		
PRE-CONST.		
ERA		
UTIL		
DESIGN		
ROW		
MATL'S		
EBO		
RE-PE'S		
MAINT.		
TRAFFIC		

Toland

OCT 1984 DESIGN SECTION DIST. 4 D.O.H.

OCT 1984 CONSTR. SEC. DIST. 4 D.O.H.

PLAN AND PROFILE OF PROPOSED
COLORADO PROJECT NO. CC 07-0036-12
STATE HIGHWAY NO. 36
BOULDER COUNTY

SCALES OF ORIGINAL DRAWINGS

ON PLAN, 1 IN. = 50 FT.

ON PROFILE { 1 IN. = 50 FT. HORIZONTAL; 1 IN. = 5 FT. VERTICAL

GRADE LINE ON PROFILE IS SHOWN AS GRADE OF FINISHED ROAD

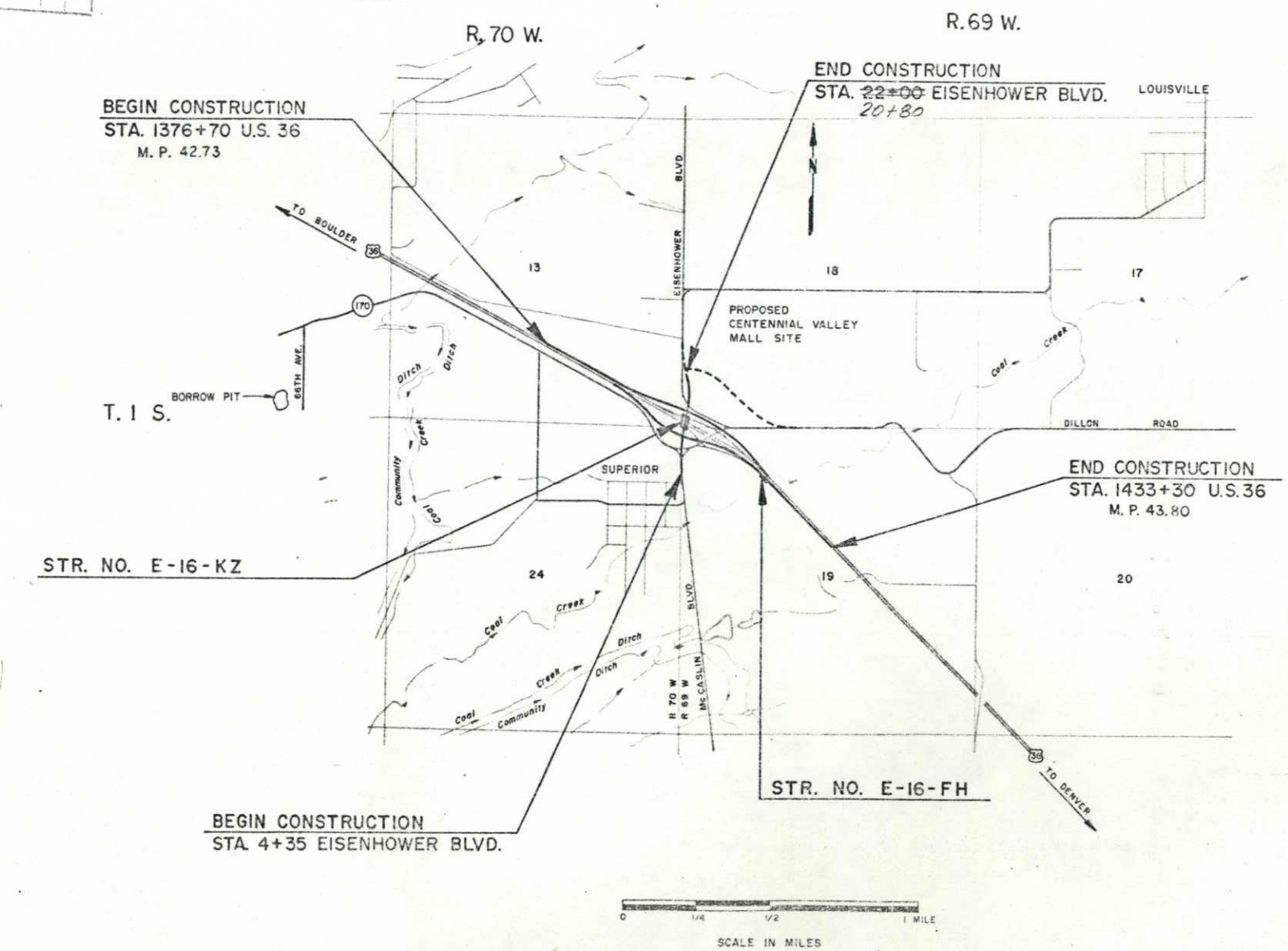

INDEX OF SHEETS

SHEET NO.	DESCRIPTION
1	TITLE SHEET
2	STANDARD PLANS LIST
3-4	TYPICAL SECTIONS
5	GENERAL NOTES AND TRAFFIC DIAGRAMS
6-12	SUMMARY OF APPROXIMATE QUANTITIES
13	TABULATION OF REMOVALS
14	TABULATION OF FENCING, DELINEATORS AND EARTHWORK
15	TABULATION OF CURB AND GUTTER, SIDEWALK, CONCRETE CURB RAMP, MEDIAN COVER MATERIAL AND GUARD RAIL
16	BASE COURSE AND SURFACE COURSE PLAN
17	TABULATION OF DRAINAGE ITEMS
18	SPECIAL DETAILS - RIPRAP OUTLET BASINS
19	SPECIAL DETAILS - TRAFFIC CONTROL DETAILS FOR EISENHOWER BOULEVARD BRIDGE PIER CONSTRUCTION
20	BORROW PIT SKETCH
21-39	EISENHOWER BOULEVARD BRIDGE DETAILS
40-45	COAL CREEK BRIDGE WIDENING DETAILS
46-51	PLAN SHEETS
52-57	PROFILE SHEETS
58	INTERCHANGE GEOMETRICS
59-61	INTERSECTION DETAILS
62-64	CONSTRUCTION PHASING PLAN
65-66	CONTOUR GRADING AND DRAINAGE
67-68	LANDSCAPING PLAN
69-80	SIGNING AND PAVEMENT MARKING PLANS
81-82	TRAFFIC SIGNAL PLANS
83	LIGHTING PLAN
27AX	REVISED WINGWALL SIDEWALK DETAIL
43AX	REVISED DECK SECTION
58AX	REVISED EISENHOWER ALIGNMENT DETAILS
59X	REVISED INTERSECTION DETAILS
81X	REVISED TRAFFIC SIGNAL LAYOUT
82X	REVISED TRAFFIC SIGNAL PLAN
83X	REVISED LIGHTING PLAN

AS CONSTRUCTED PLANS RETURN TO DIST. 4 DESIGN

COLORADO REGISTERED PROFESSIONAL ENGINEER

CENTENNIAL ENGINEERING, INC.
15000 WEST 64TH AVENUE
ARVADA, COLORADO 80001

DIVISION OF HIGHWAYS

APPROVED: R. F. Chenoweth

Asst. CHIEF ENGINEER 11-1-82 DATE

AS CONSTRUCTED INFORMATION

CONTRACTOR VARRA-SIEGRIST, Joint Venture

PROJECT ENGINEER (Project or Resident) DON EVANS

PROJECT STARTED Jan 4, 1983

PROJECT COMPLETED Aug 10, 1984

AS CONSTRUCTED PLANS APPROVED D. R. Peterson

DCE 8/30/84

TITLE DATE

CKM/JWL

STATE DEPARTMENT OF HIGHWAYS
DIVISION OF HIGHWAYS-STATE OF COLORADO
DOH FORM NO. 117
REV. MAR. 77

AS CONSTRUCTED			
NO REVISIONS		REVISED 8-10-84	VOID

FEDERAL ROAD REGION NO.	DIVISION	PROJ. NO.	SHEET NO.	TOTAL SHEETS
VIII	COLORADO	CC 07-0036-12	40	90

REVISIONS		

BRIDGE STANDARD O

GENERAL NOTES

ALL WORK SHALL BE DONE ACCORDING TO THE STANDARD SPECIFICATIONS OF THE DIVISION OF HIGHWAYS, STATE OF COLORADO, APPLICABLE TO THE PROJECT.

EXPANSION JOINT MATERIAL SHALL MEET AASHTO SPECIFICATION M-213.

ALL STRUCTURAL STEEL SHALL BE AASHTO M-183 (ASTM A-36) UNLESS OTHERWISE NOTED.

ALL AASHTO M-183 (ASTM A-36) STEEL NOT OTHERWISE NOTED SHALL BE PAINTED IN ACCORDANCE WITH SECTION 509 OF THE STANDARD SPECIFICATIONS. THE COLOR SHALL BE STANDARD GREEN.

ALL BOLTS SHALL BE 3/4 INCH DIAMETER, HIGH STRENGTH, UNLESS OTHERWISE NOTED.

NO WELDING OF ANY KIND SHALL BE PERMITTED ON THE FLANGES OF STEEL GIRDERS UNLESS SPECIFICALLY CALLED FOR ON THE PLANS.

GRADE 60 REINFORCING STEEL IS REQUIRED FOR #5 BARS AND LARGER. GRADE 40 MAY BE USED FOR #4 BARS.

APPLIED WIND LOADS AND EARTHQUAKE LOADS WERE NOT CONSIDERED IN ANALYZING THE THE STRUCTURE FOR STABILITY DURING THE CONSTRUCTION STAGES.

E.F. = EACH FACE
F.F. = FAR FACE
N.F. = NEAR FACE

STATIONS, ELEVATIONS, AND DIMENSIONS CONTAINED IN THESE PLANS ARE CALCULATED FROM "AS CONSTRUCTED PLANS" AND RECENT FIELD SURVEY.

THESE STATIONS, ELEVATIONS, AND DIMENSIONS MAY BE ADJUSTED TO MEET THE EXISTING STRUCTURE. THE CONTRACTOR SHALL VERIFY ALL DEPENDENT DIMENSIONS IN THE FIELD BEFORE ORDERING OR FABRICATING ANY MATERIAL.

STRUCTURE BACKFILL ON THE FILL SIDE OF ABUTMENTS AND WINGWALLS SHALL BE CLASS 1. STRUCTURE BACKFILL ON THE CHANNEL SIDE OF ABUTMENTS AND WINGWALLS SHALL BE CLASS 2.

STRUCTURE EXCAVATION AND BACKFILL QUANTITIES FOR THE ABUTMENTS AND WINGWALLS ARE COMPUTED TO NEAT LINES 18 INCHES OUTSIDE AND PARALLEL TO THE OUTLINE OF THE FOUNDATION PLAN. STRUCTURE EXCAVATION QUANTITIES FOR RIPRAP ARE LIMITED TO THE VOLUME OF RIPRAP PLACED BELOW THE STREAM BED.

	INITIAL	DATE	CHECKED BY
DESIGNED BY	D.H.H.	6-82	
CHECKED BY	B.E.O.	6-82	QUANTITIES BY K.L.D. 6-82
DETAILED BY	L.J.P.	6-82	CHECKED BY E.W.K. 6-82

SUMMARY OF QUANTITIES

ITEM	DESCRIPTION	UNIT	STRUCTURE NO. E-16-FH Super-Structure	Abut 1	Abut 2	Totals
202*	REMOVAL OF PORTIONS OF PRESENT STRUCTURE	L.S.	1	1	1	1
206	STRUCTURE EXCAVATION	CU.YD.		223	223	446
206	STRUCTURE BACKFILL (CLASS 1)	CU.YD.		148	148	296
206	STRUCTURE BACKFILL (CLASS 2)	CU.YD.		52	52	104
403	HOT BITUMINOUS PAVEMENT (GRADING EX)(HAUL & ASPHALT)	TON	7			7
506	RIPRAP	CU.YD.		38	29	67
506	PLASTIC FILTER CLOTH	SQ.YD.		38	29	67
509	STRUCTURAL STEEL	LB.	18,106			18,106
509	STRUCTURAL STEEL (GALVANIZED)	LB.	3,810			3,810
515	WATERPROOFING MEMBRANE	SQ.YD.	~~52~~ 46			~~52~~ 46
518	WATERSTOP (6INCH)	L.F.		21	20	41
518	BRIDGE EXPANSION DEVICE (0-2 INCH)	L.F.		10	10	20
601**	CONCRETE CLASS A (BRIDGE)	CU.YD.		61	60	121
601	CONCRETE CLASS D (BRIDGE) CMO No. 10	CU.YD.	15.52			15.52
602	REINFORCING STEEL	LB.	~~2159~~ 2159	~~4882~~ 15435	~~4887~~ 15415	~~11,829~~ 13009
602	REINFORCING STEEL (EPOXY COATED)	LB.	~~1645~~	1595	1595	~~1645~~
606	GUARD RAIL TYPE 3A	L.F.	67			67
613	1 1/2 INCH ELECTRICAL CONDUIT	L.F.	~~54~~ 114			~~54~~ 114
613	2 INCH ELECTRICAL CONDUIT	L.F.	~~54~~ 114			~~54~~ 114

* INCLUDES REMOVAL OF EXISTING RAIL.
**INCLUDES CONCRETE MUD SLAB.

INDEX OF DRAWINGS

B-1 GENERAL INFORMATION AND SUMMARY OF QUANTITIES
B-2 GENERAL LAYOUT
B-3 ABUTMENT AND WINGWALL DETAILS
B-4 SUPERSTRUCTURE DETAILS
B-5 BRIDGE EXPANSION DEVICE (0-2 INCH)
B-6 BRIDGE RAIL TYPE 3

BRIDGE DESCRIPTION

1 - SIMPLE SPAN (50'-0") BRIDGE WIDENING
WIDENING FROM 42'-0" TO 49'-3" OUT TO OUT.
CONCRETE SLAB AND ROLLED STEEL GIRDER (NON-COMPOSITE)
OVER COAL CREEK
46'-0" ROADWAY CURB TO CURB. 90° 00' SKEW
1'-3" CURB. TYPE 3 BRIDGE RAIL

THE FOLLOWING TABLE GIVES THE MINIMUM LAP SPLICE LENGTH FOR REINFORCING BARS:

BAR SIZE NUMBER		4	5	6	7	8	9	10	11
SPLICE LENGTH	CLASS A CONCRETE	1'-0"	1'-3"	1'-8"	2'-3"	3'-0"	3'-10"	4'-10"	5'-11"
	CLASS D CONCRETE	1'-0"	1'-3"	1'-6"	2'-0"	2'-7"	3'-4"	4'-2"	5'-1"

LOADING DATA

LIVE LOAD: AASHTO HS-20-44 AND INTERSTATE ALTERNATE
DEAD LOAD: ASSUMES 50 LBS. PER SQ. FT. FOR BITUMINOUS PAVEMENT

DESIGN DATA

CURRENT AASHTO SPECIFICATIONS:
REINFORCED CONCRETE:
CLASS A CONCRETE: f_c = 1,200 psi, n = 9
CLASS D CONCRETE: f_c = 1,600 psi, n = 8
REINFORCING STEEL: #4 BARS: f_s = 20,000 psi
#5 BARS AND LARGER: f_s = 24,000 psi
EXCEPT FOR TRANSVERSE DECK SLAB BETWEEN GIRDERS, f_s = 20,000 psi
STRUCTURAL STEEL: AASHTO M-183 (ASTM A-36) f_s = 20,000 psi

CROSS REFERENCE DRAWING NUMBER
B
SECTION OR DETAIL IDENTIFICATION

RANDALL D. RITCHEY REGISTERED PROFESSIONAL ENGINEER STATE OF COLORADO

Approved
BRIDGE ENGINEER DATE

DIVISION OF HIGHWAYS

GENERAL INFORMATION
SUMMARY OF QUANTITIES

Station 1419+33.00 TO
Station 1419+87.00

Near SUPERIOR Sec 19 T 1S R 69 W

Designer D. HELLER		Structure Numbers	E-16-FH
Detailer L. PACHECO			
Drawing Number B 1 of 6 Drawings			

(11-1-79)

Revision Dates (Preliminary Stage Only) 0

STATE DEPARTMENT OF HIGHWAYS
DIVISION OF HIGHWAYS-STATE OF COLORADO
DOH FORM NO. 117
REV. JAN. 1975

AS CONSTRUCTED		
NO REVISIONS	REVISED 8-10-84	VOID

FEDERAL ROAD REGION NO.	DIVISION	PROJ. NO.	SHEET NO.	TOTAL SHEETS
VIII	COLORADO	CC 07-0036-12	41	90

REVISIONS		

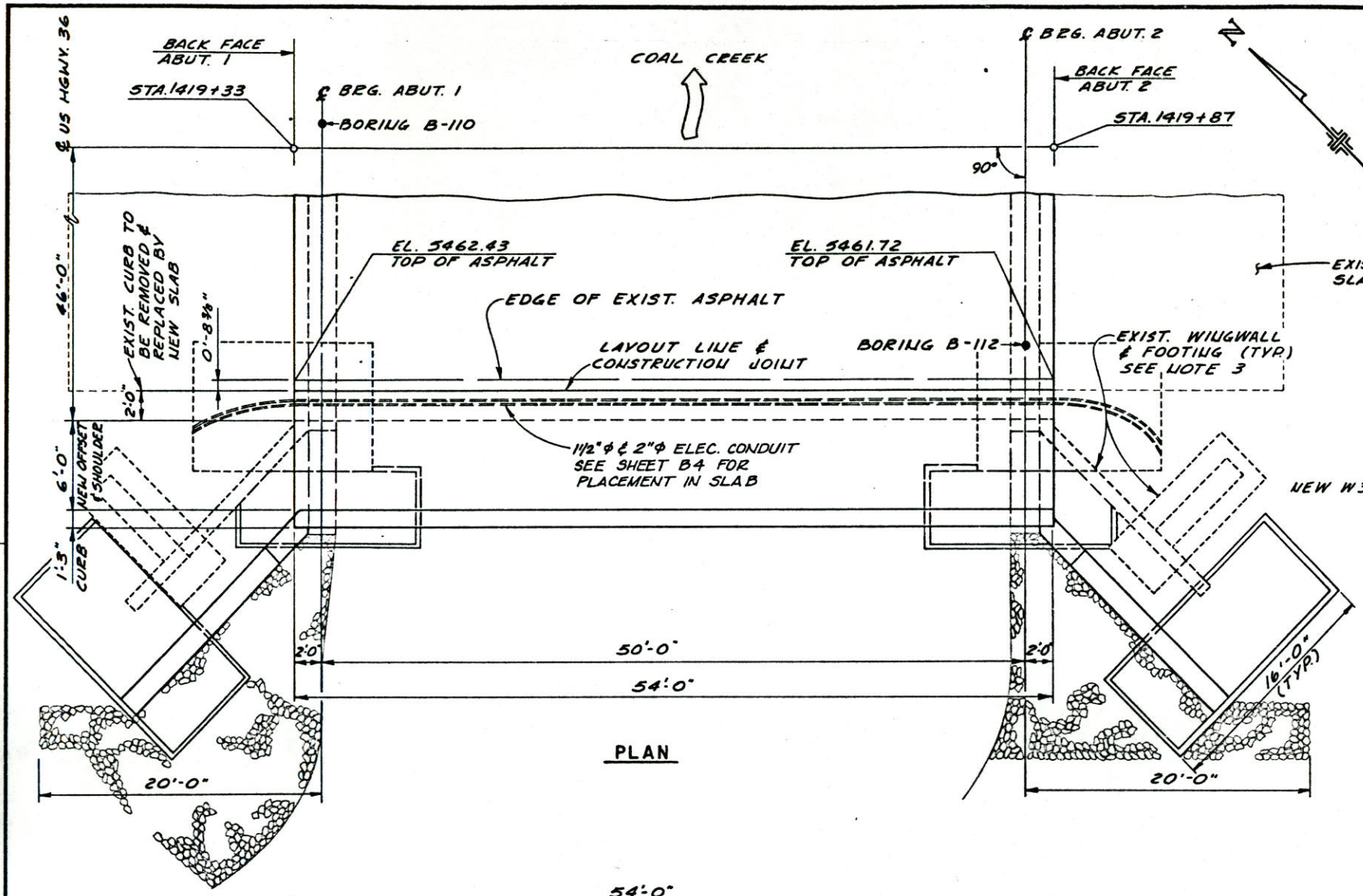

PLAN

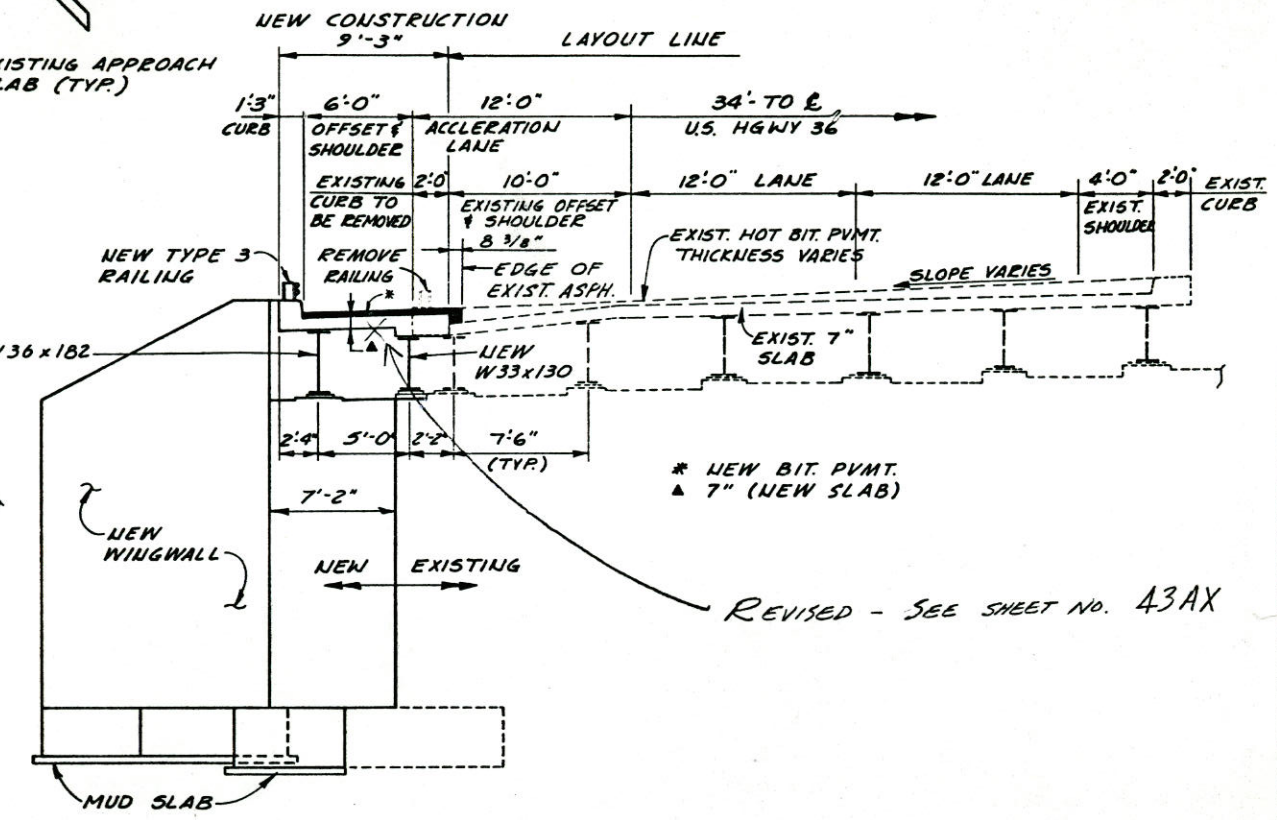

TYPICAL SECTION

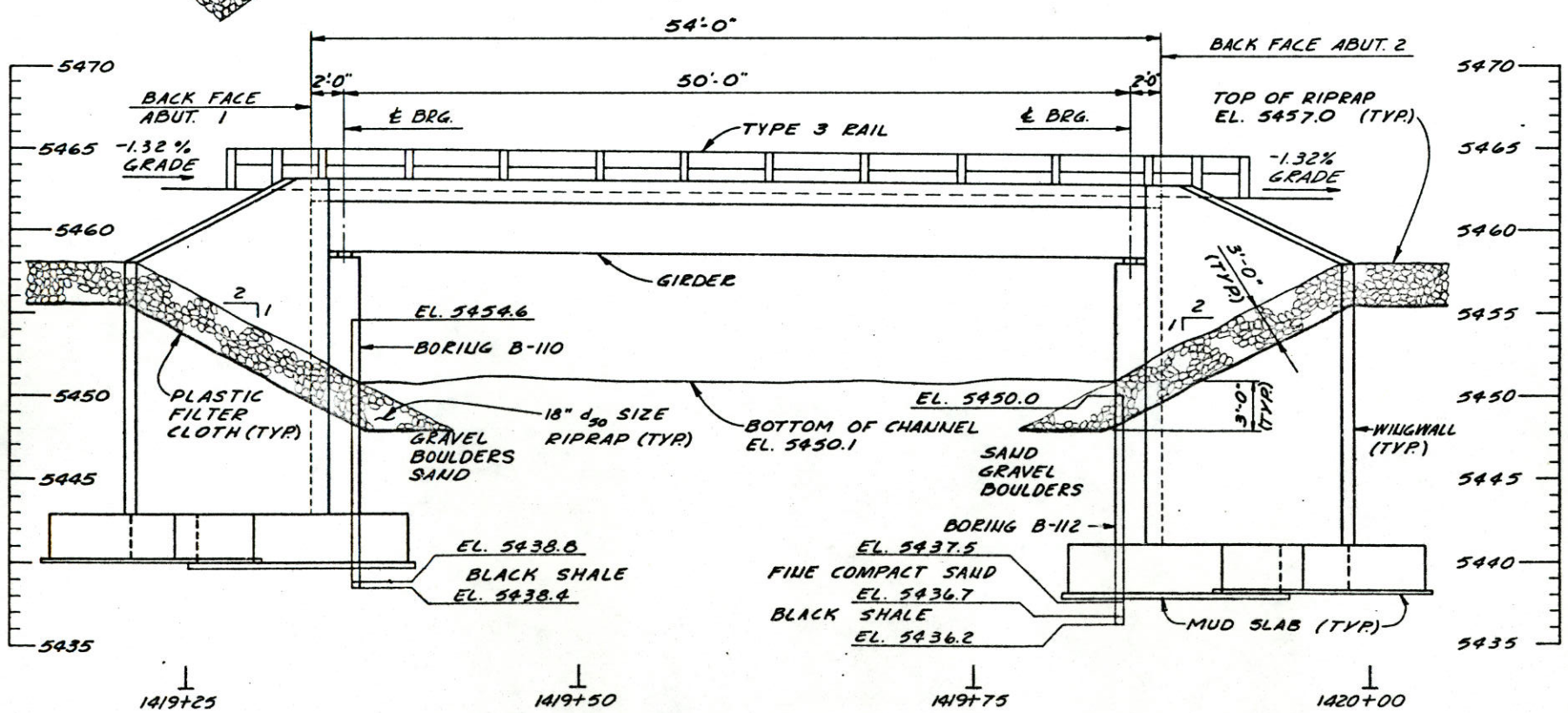

ELEVATION

NOTES:

1. LIVE LOAD DESIGN CRITERIA: HS 20-44 & INTERSTATE ALTERNATE
2. SOIL BORING LOGS TAKEN FROM "AS CONSTRUCTED PLANS." PROJECT NO. T-170-1(5)
3. PORTIONS OF EXISTING WINGWALLS WITHIN 2' OF FINISHED GRADE SHALL BE REMOVED. REMAINING PORTIONS MAY BE REMOVED AT CONTRACTOR'S OPTION. INCLUDE IN BID, PRICE FOR ITEM NO. 202, REMOVAL OF PORTIONS OF PRESENT STRUCTURE.

CENTENNIAL ENGINEERING, INC. ARVADA, COLORADO

DIVISION OF HIGHWAYS

STATE HIGHWAY 36
OVER COAL CREEK
(SUPERIOR INTERCHANGE)

GENERAL LAYOUT

Designer D. HELLER		Structure Numbers	E-16-FH
Detailer G. HIESCH			
Drawing Number B 2	of 6	Drawings	

Revision Dates (Preliminary Stage Only)

	INITIAL	DATE
DESIGNED BY	D.J.H.	6-82
CHECKED BY	A.C.O.	6-82
DETAILED BY	L.J.P.	6-82
CHECKED BY		6-82
QUANTITIES BY	K.L.O.	6-82
CHECKED BY	E.W.K.	6-82

STATE DEPARTMENT OF HIGHWAYS
DIVISION OF HIGHWAYS STATE OF COLORADO
DOH FORM NO. 117
REV. JAN. 1975

AS CONSTRUCTED			
NO REVISIONS 8-10-84	REVISED		VOID

FEDERAL ROAD REGION NO	DIVISION	PROJ. NO	SHEET NO	TOTAL SHEETS
VIII	COLORADO	CC 07-0036-12	42	90

REVISIONS		

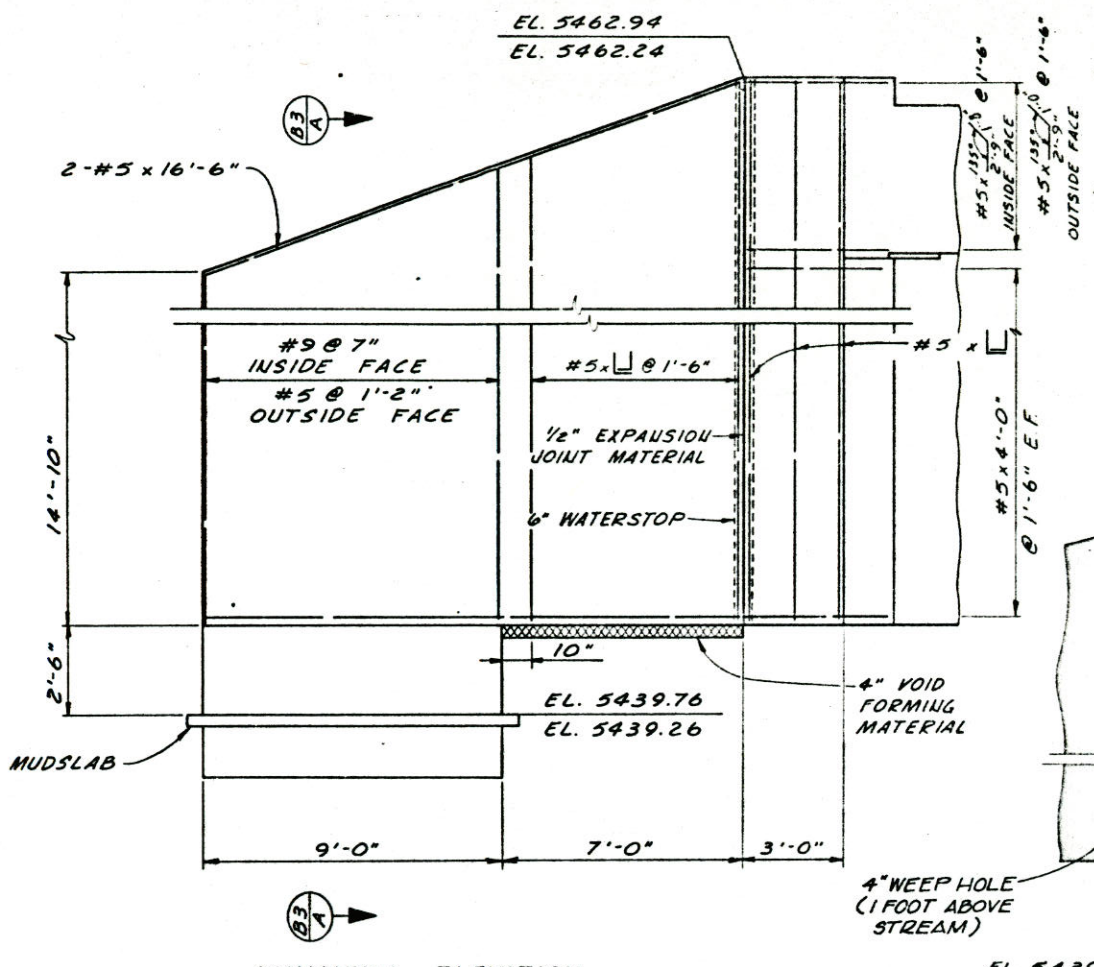

WINGWALL ELEVATION

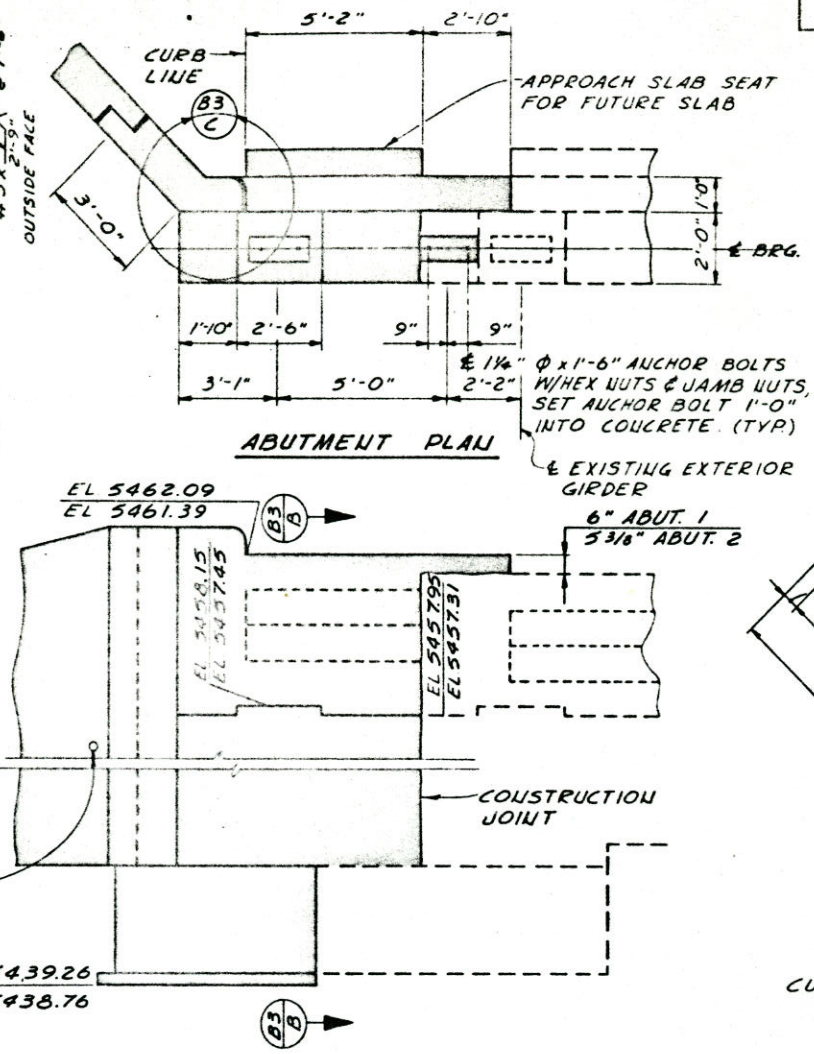

ABUTMENT PLAN

ABUTMENT ELEVATION

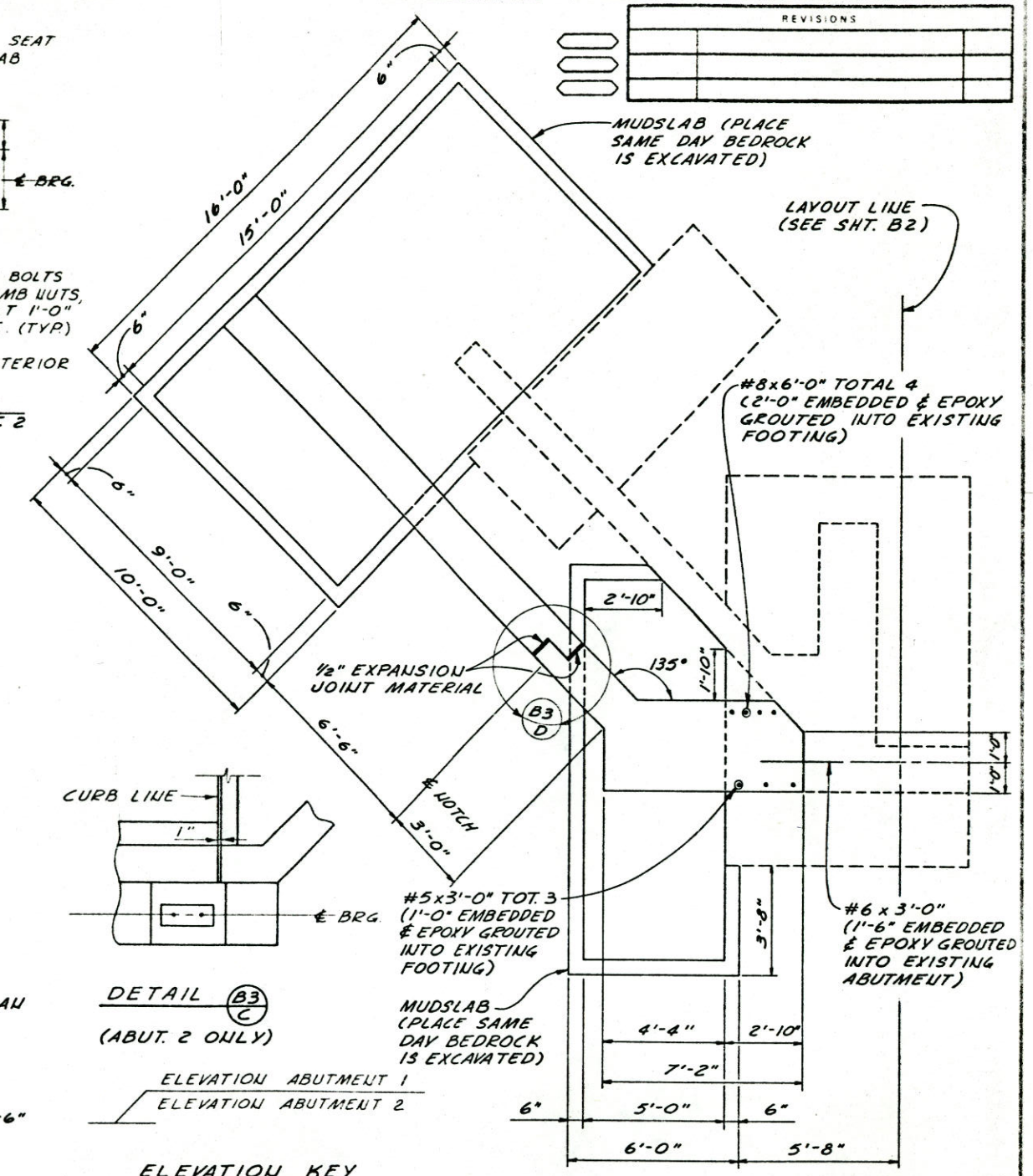

FOOTING PLAN

DETAIL B3/C
(ABUT. 2 ONLY)

ELEVATION ABUTMENT 1
ELEVATION ABUTMENT 2

ELEVATION KEY

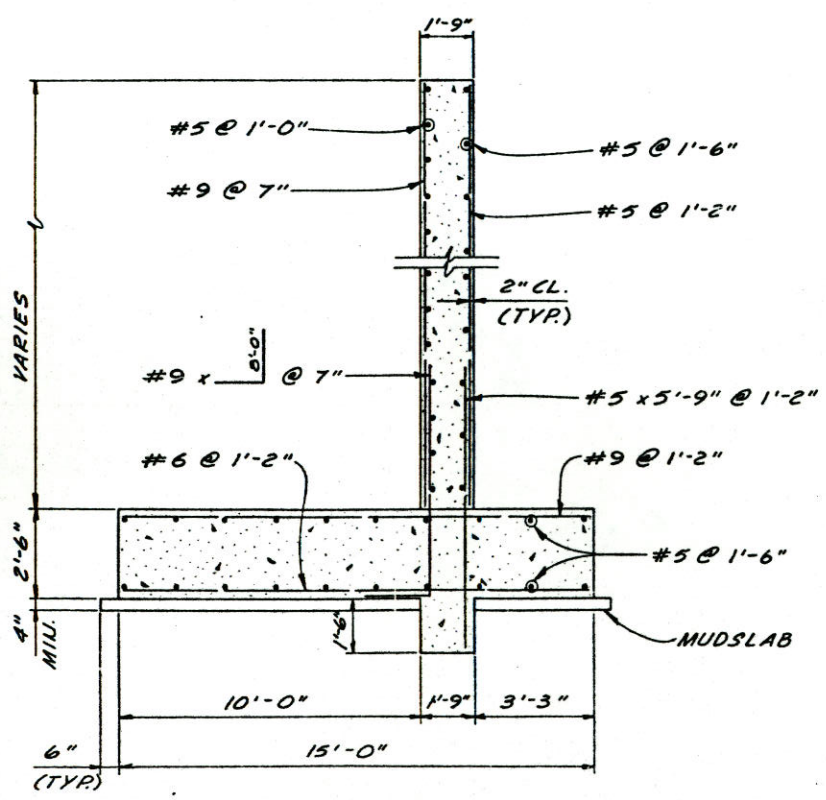

WING SECTION B3/A

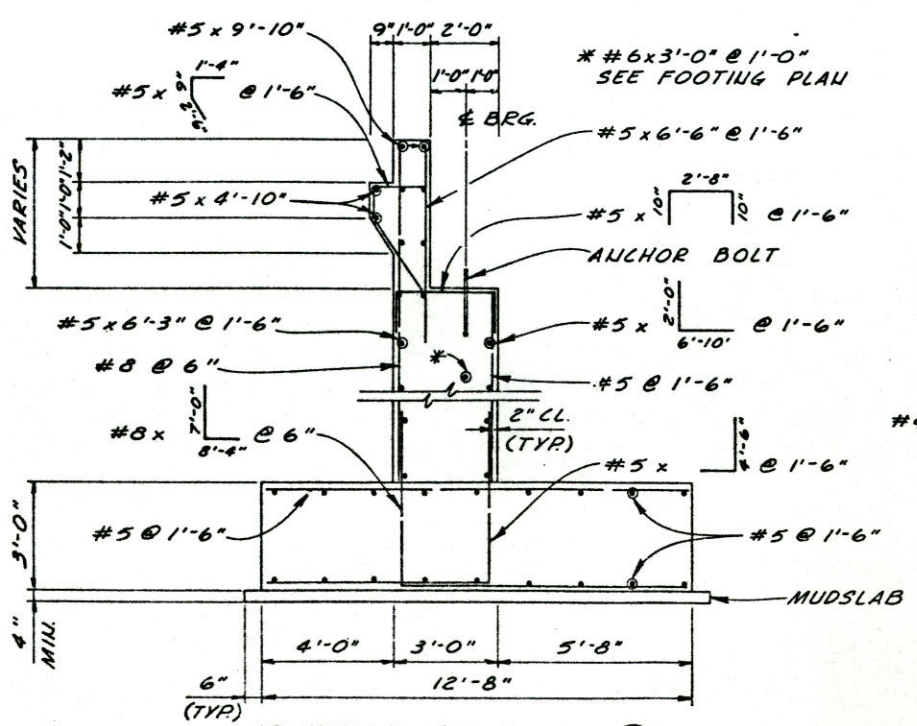

ABUTMENT SECTION B3/B

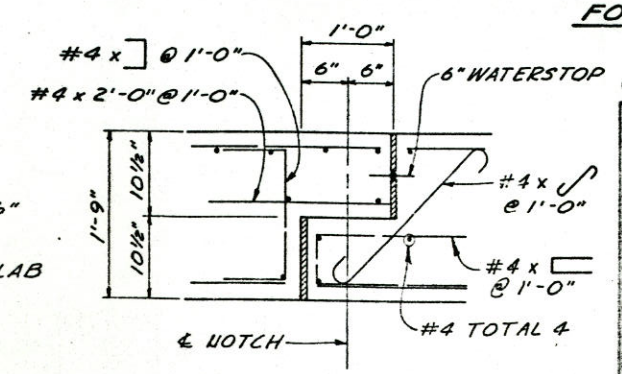

DETAIL B3/D

INITIAL	DATE		
DESIGNED BY D.H.H.	6-82		
CHECKED BY R.C.O.	6-82	H.L.O.	6-82
DETAILED BY L.J.P.	6-82	CHECKED BY E.W.K.	6-82

CENTENNIAL ENGINEERING, INC. ARVADA, COLORADO

DIVISION OF HIGHWAYS

STATE HIGHWAY 36
OVER COAL CREEK
(SUPERIOR INTERCHANGE)

ABUTMENT & WINGWALL DETAILS

Designer	D. HELLER	Structure Numbers	E-16-FH
Detailer	L. J. PACHECO		
Drawing Number B 3		of 6	Drawings

Revision Dates | Preliminary Stage Only!

STATE DEPARTMENT OF HIGHWAYS
DIVISION OF HIGHWAYS STATE OF COLORADO
DOH FORM NO. 117
REV. JAN. 1975

AS CONSTRUCTED		
NO REVISIONS	REVISED 8-10-84	VOID

FEDERAL ROAD REGION NO	DIVISION	PROJ. NO.	SHEET NO.	TOTAL SHEETS
VIII	COLORADO	CC 07-0036-12	43	90

REVISIONS		

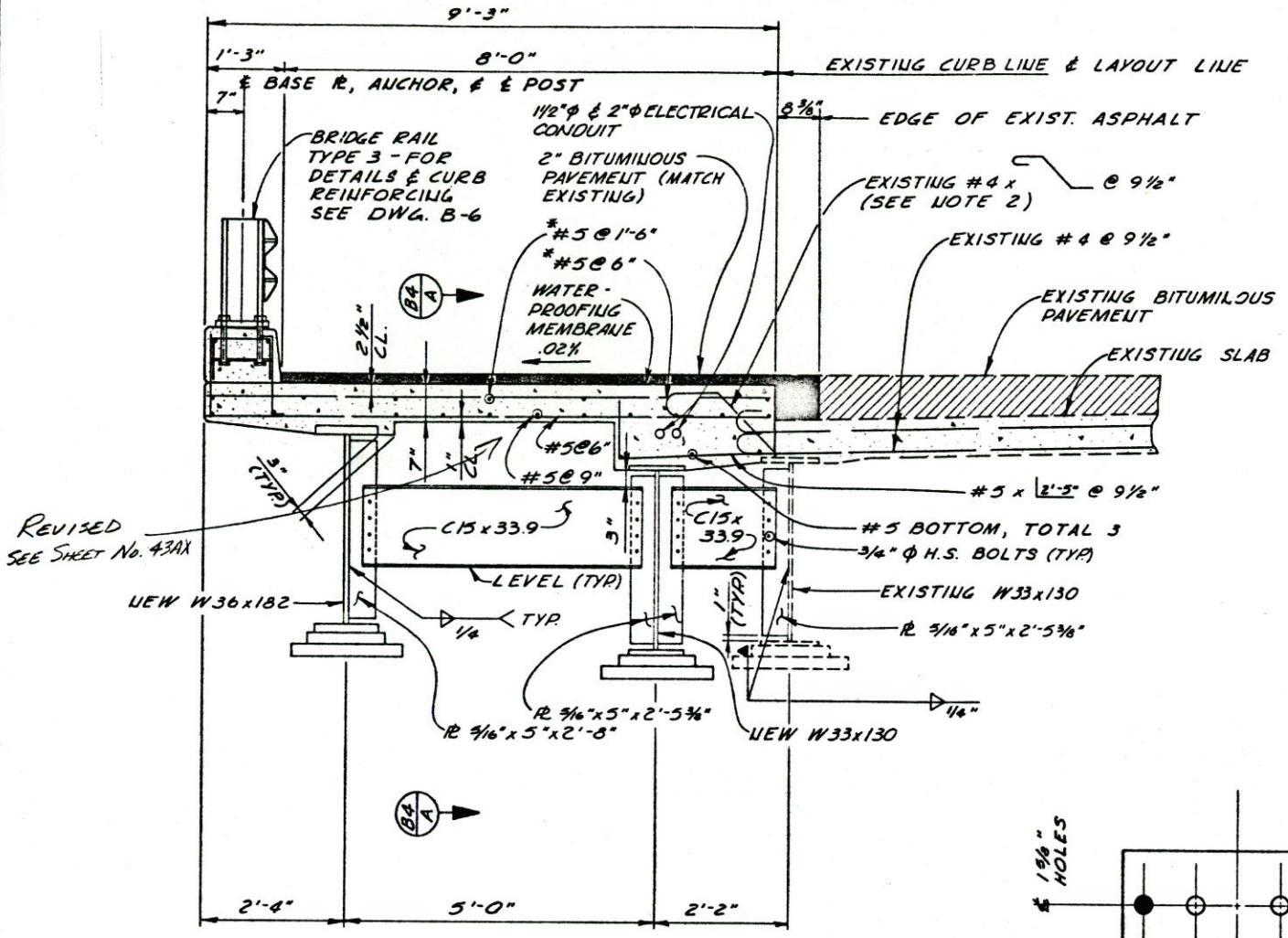

DECK SECTION SHOWING END DIAPHRAGM

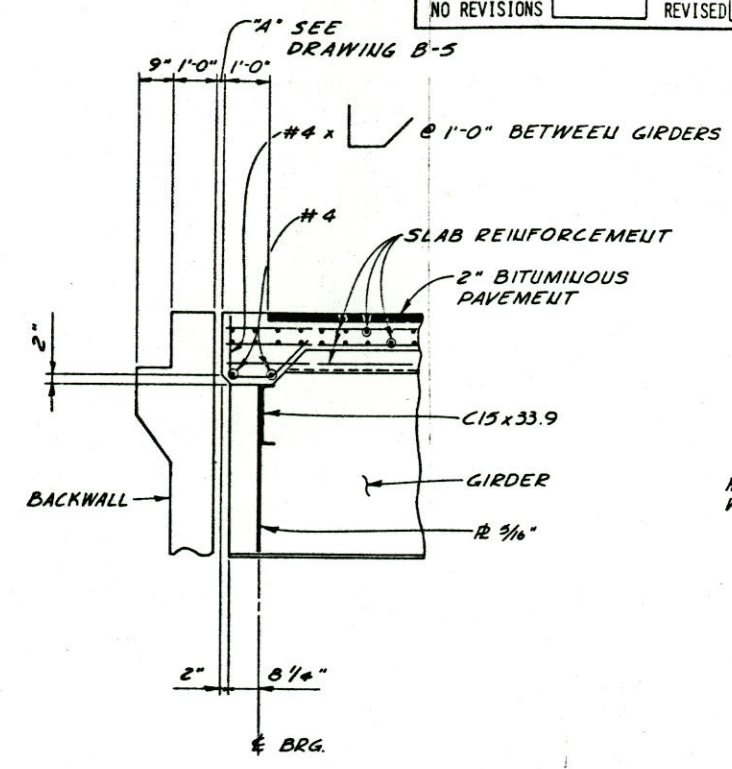

SECTION B4/A

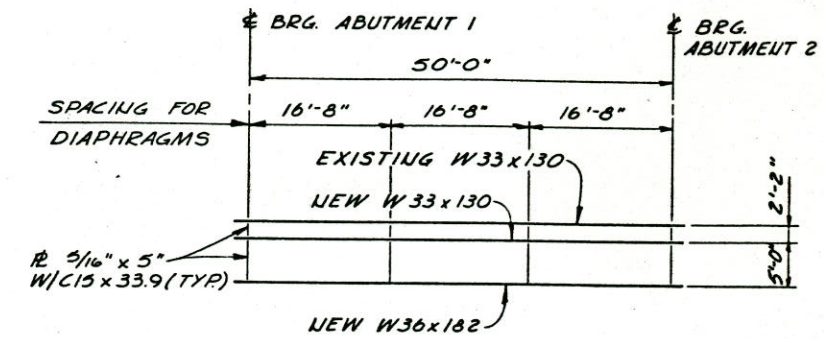

FRAMING PLAN

DEAD LOAD DEFLECTION TABLE (IN.)

	SPAN POINT	0	.25	.50
W33x130 BEAM	DEAD LOAD DEFLECTION (CONC. ONLY)	0	¼	⅜
	TOTAL DEAD LOAD DEFLECTION	0	7/16	⅝
W36x182 BEAM	DEAD LOAD DEFLECTION (CONC. ONLY)	0	3/16	¼
	TOTAL DEAD LOAD DEFLECTION	0	5/16	7/16

℄ SPAN SYMMETRICAL

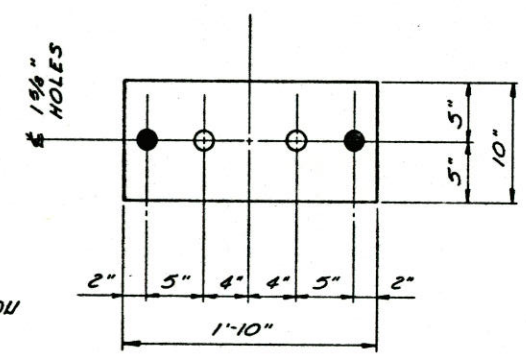

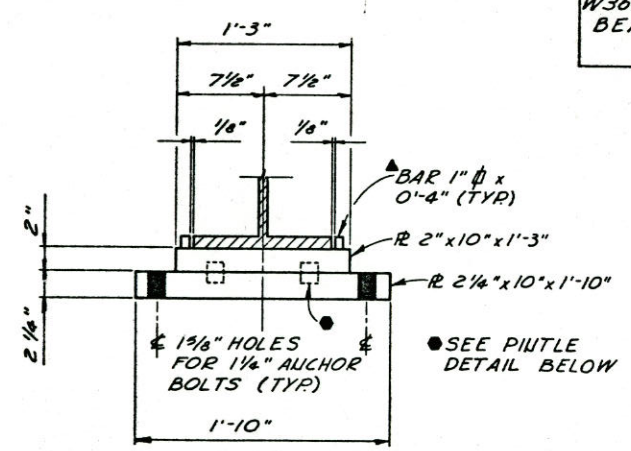

DECK ELEVATIONS
(TOP OF CONCRETE)

	EDGE OF DECK	CURB LINE	LAYOUT LINE
B.F. ABUT 1	5462.06	5462.09	5462.25
℄ ABUT. 1	5462.04	5462.06	5462.22
10'	5461.92	5461.94	5462.10
20'	5461.78	5461.80	5461.96
30'	5461.64	5461.66	5461.82
40'	5461.50	5461.52	5461.68
℄ ABUT. 2	5461.38	5461.40	5461.56
B.F. ABUT. 2	5461.36	5461.39	5461.55

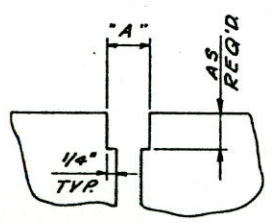

SECTION THRU CURB

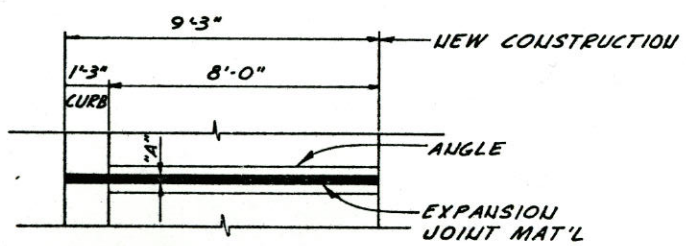

ABUTMENT PLAN

EXPANSION DEVICE
SEE DWG. B-5 FOR DIMENSION "A" DETAILS

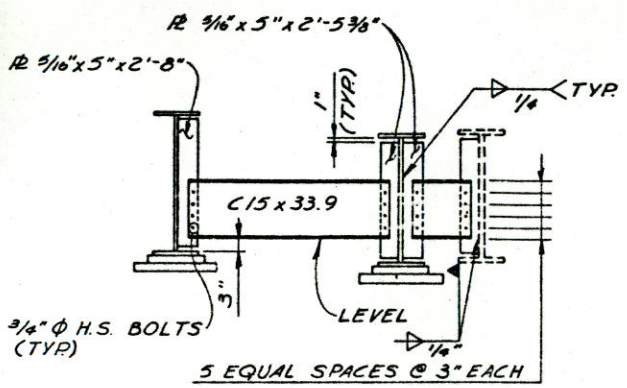

INTERMEDIATE DIAPHRAGM

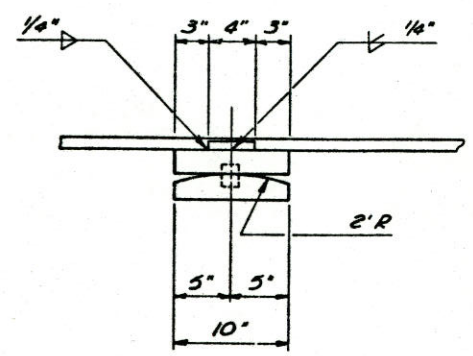

EXPANSION SHOE DETAILS
(ABUTMENT 1)

▲NOTE: FOR FIXED SHOES, OMIT BAR 1" φ x 0'-4", REPLACE WITH SHOE TO BEAM ¼" WELD. (ABUTMENT 2 ONLY)

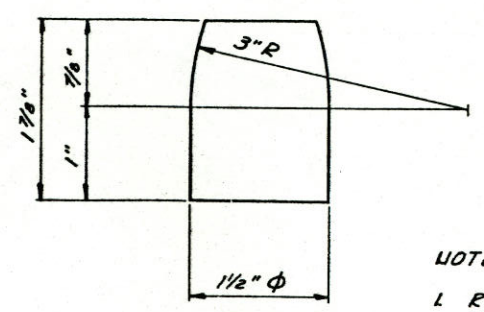

NOTES:

1. REINFORCING BARS MARKED WITH * SHALL BE EPOXY COATED.
2. BEND BAR DOWN TO MAINTAIN 2½" CLR.

CENTENNIAL ENGINEERING, INC WHEAT RIDGE, COLORADO

DIVISION OF HIGHWAYS

STATE HIGHWAY 36
OVER COAL CREEK
(SUPERIOR INTERCHANGE)

SUPERSTRUCTURE DETAILS

Designer	D. HELLER	Structure Numbers	F-16-FH
Detailer	L. PACHECO		
Drawing Number B 4 of 6 Drawings			

INITIAL	DATE	CHECKED BY	DATE
D.N.H.	6-82		
B.C.O.	6-82	QUANTITIES BY	6-82
L.J.P.	6-82	CHECKED BY	6-82

DESIGNED BY / CHECKED BY / DETAILED BY

ISSUE / DATE

Revision Dates (Preliminary Stage Only)

FEDERAL ROAD REGION NO.	DIVISION	PROJ. NO.	SHEET NO.	TOTAL SHEETS
VIII	COLORADO	CC 57-0036-12	43AX	

AS CONSTRUCTED

NO REVISIONS ☐ REVISED 8-10-84 VOID ☐

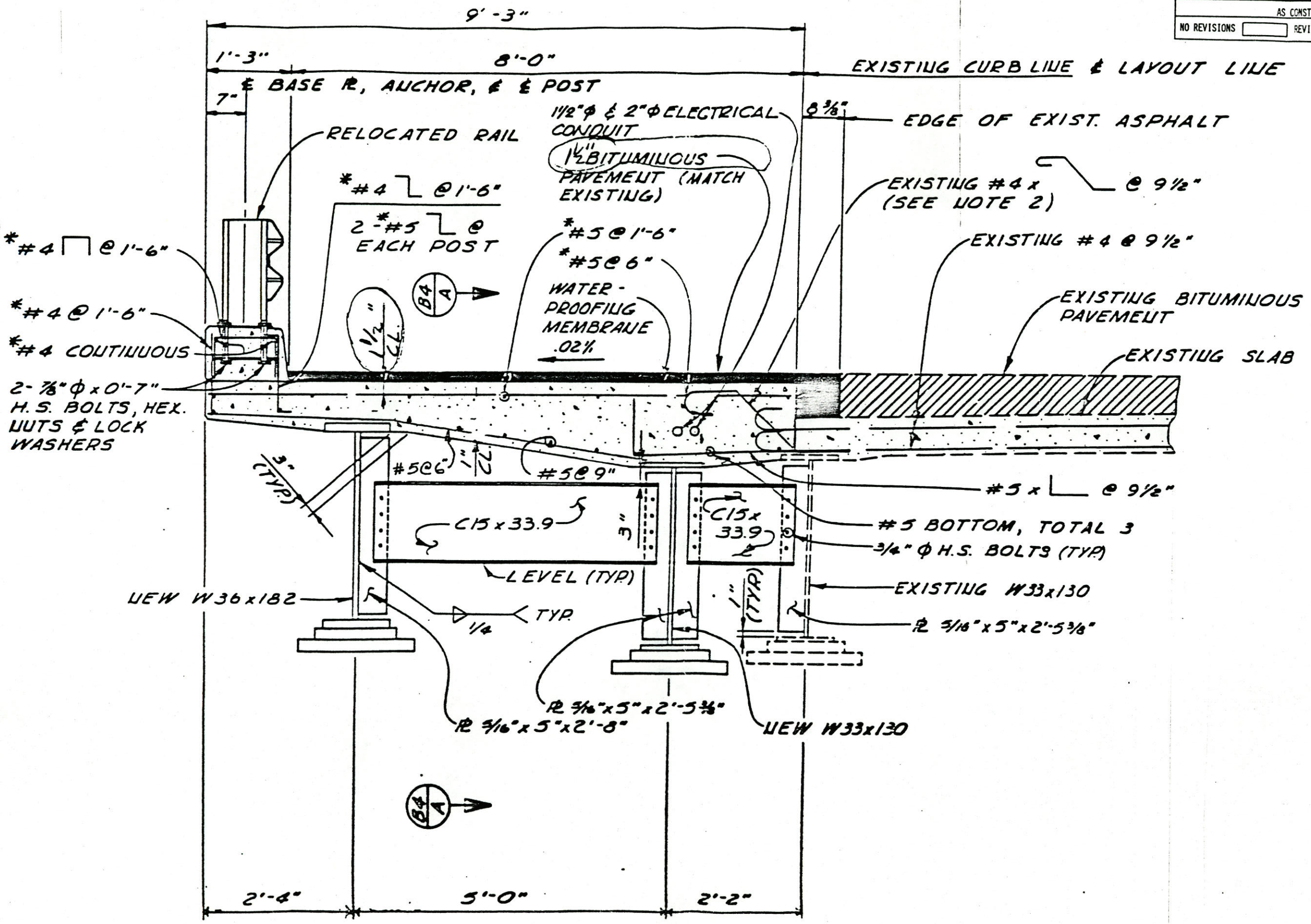

STATE DEPARTMENT OF HIGHWAYS
DIVISION OF HIGHWAYS STATE OF COLORADO
DOH FORM NO. 111
REV. MAR. 77

AS CONSTRUCTED			
NO REVISIONS		REVISED 8-10-84	VOID

FEDERAL ROAD REGION NO	DIVISION	PROJ. NO.	SHEET NO.	TOTAL SHEETS
VIII	COLORADO	CC-07-0036-12	44	90

REVISIONS		

BRIDGE STANDARD 41

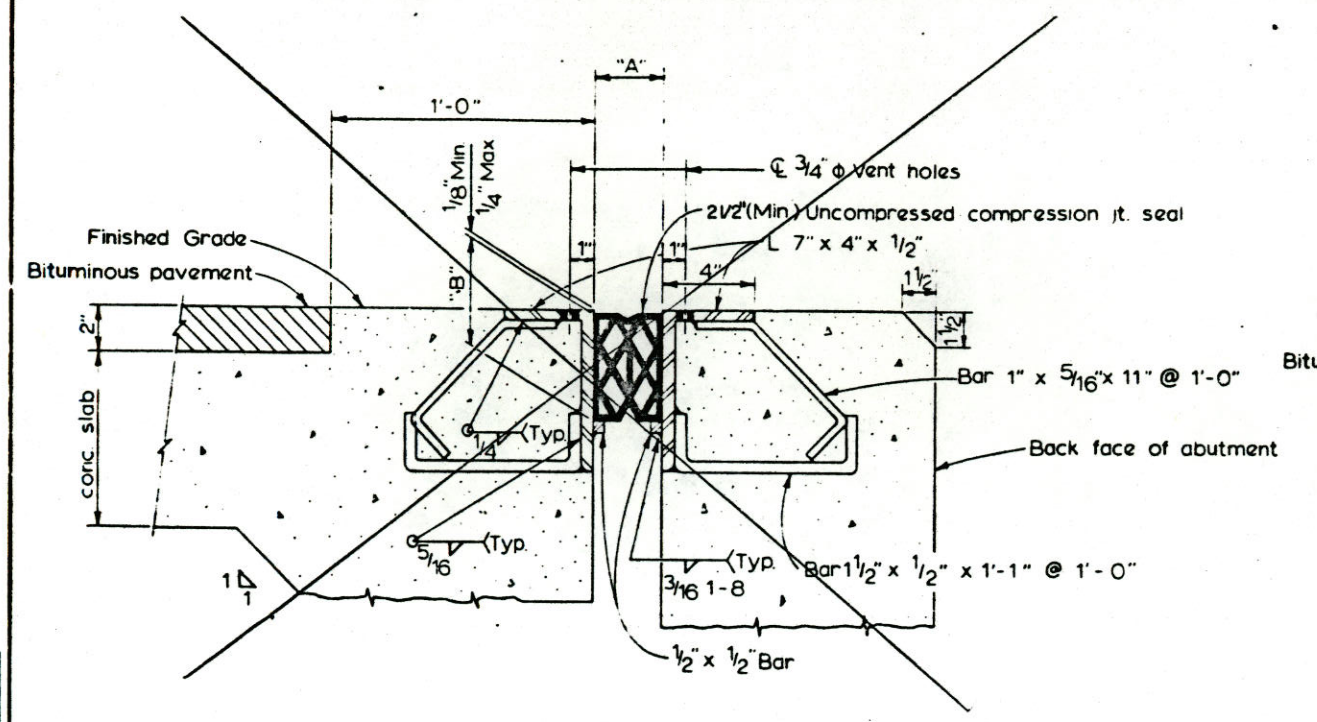

TYP. SECTION THRU EXPANSION JOINT

NOTE: THE "A" DIMENSION FOR THE COMPRESSION JOINT SEAL IS BASED ON A 2 1/2" UNCOMPRESSED SEALER SIZE. THE CONTRACTOR SHALL VERIFY THE EXACT WIDTH OF THE UNCOMPRESSED COMPRESSION JOINT SEALER AT THE JOB SITE AND ADJUST THE "A" DIMENSION ACCORDINGLY.

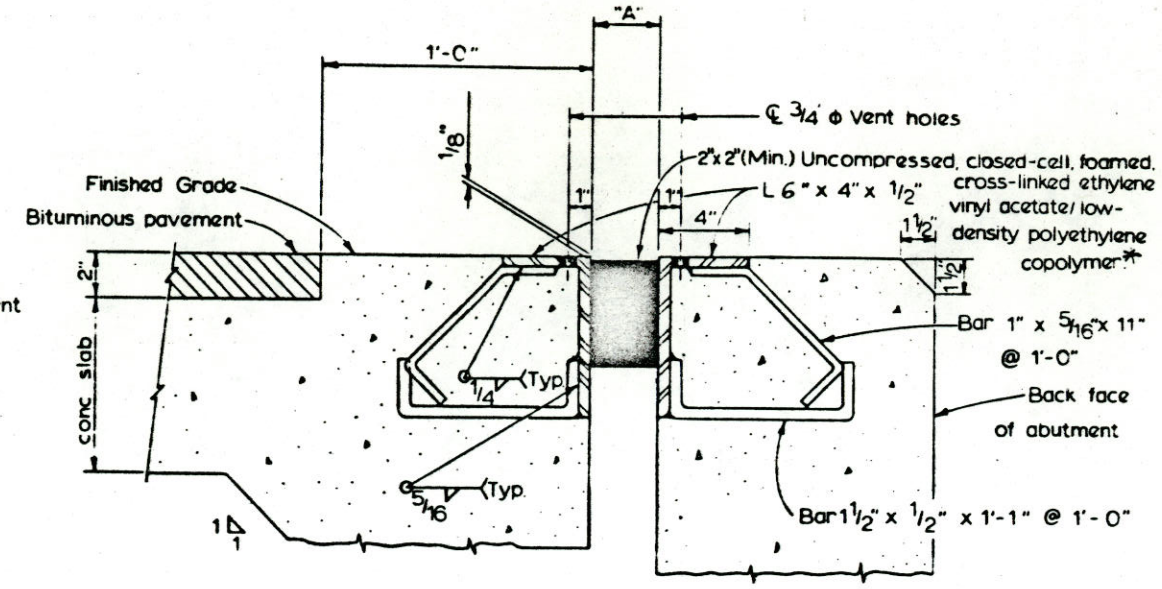

TYP. SECTION THRU EXPANSION JOINT

NOTES

THE EXPANSION DEVICE SHALL BE INSTALLED ON GRADE, PARALLEL TO THE SLOPE AND GRADE OF THE DECK.

AFTER THE CONCRETE HAS ATTAINED INITIAL SET, THE ATTACHMENTS USED TO HOLD THE ANGLE ASSEMBLY IN ITS PROPER POSITION SHALL BE REMOVED.

DO NOT PAINT STEEL SURFACES.

THE SHOP DRAWINGS SHALL INDICATE THE "A" DIMENSION AT A RANGE OF TEMPERATURES FROM 30° TO 100° ASSUMING A MID-POINT OPERATING RANGE TEMPERATURE OF 40°.

ANGLE ASSEMBLIES TO EXTEND GUTTER TO GUTTER ONLY.

OPENING IN CURB AND SIDEWALK TO BE CONSTRUCTED TO THE EXACT WIDTH OF THE DECK OPENING AT THE TIME OF CURB AND SIDEWALK PLACEMENT.

VENT HOLES SHALL NOT BE USED FOR SUPPORT BOLTS

ALL STRUCTURAL STEEL NOT OTHERWISE NOTED SHALL BE AASHTO M-183 (ASTM A-36).

THE "B" DIMENSION IS DEPENDENT UPON THE PARTICULAR COMPRESSION JOINT SEAL SUPPLIED, AND SHALL BE SHOWN ON THE SHOP DRAWINGS.

* BRAND NAME EVAZOTE

compression jt. seal		closed-cell, foamed, cross-linked ethylene vinyl acetate/ low-density polyethylene copolymer.	
Structure Temperature	Dim. "A" ABUT. 1 & 2	Structure Temperature	Dim. "A" ABUT. 1 & 2
30°F	1 11/16"	30°F	1 9/16"
40°F	1 5/8"	40°F	1 1/2"
50°F	1 9/16"	50°F	1 7/16"
60°F	1 1/2"	60°F	1 3/8"
70°F	1 7/16"	70°F	1 5/16"
80°F	1 7/16"	80°F	1 5/16"
90°F	1 3/8"	90°F	1 1/4"
100°F	1 5/16"	100°F	1 3/16"

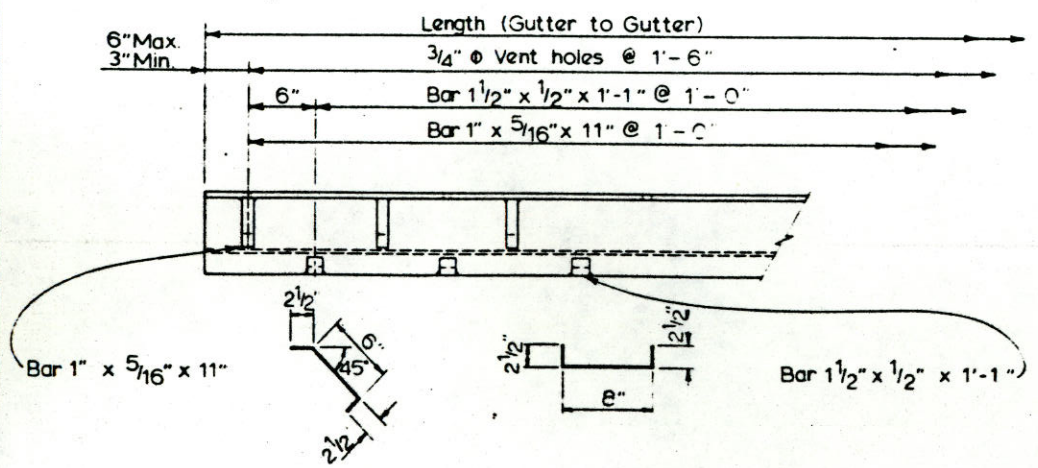

ANGLE (7" x 4" x 1/2") DETAIL

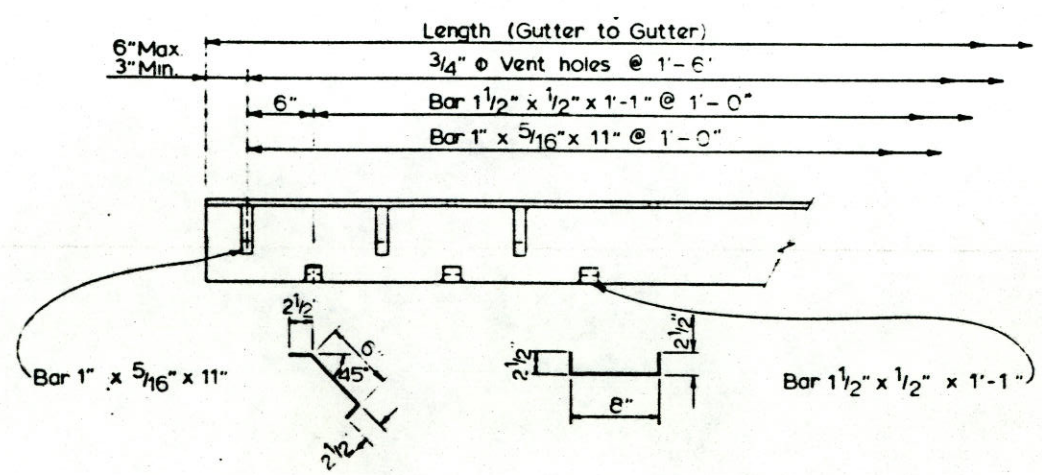

ANGLE (6" x 4" x 1/2") DETAIL

INITIAL	DATE	CHECKED BY	
DESIGNED BY		QUANTITIES BY	K.L.D. 6-82
CHECKED BY	8.6.82	CHECKED BY	E.W.K. 6-82
DETAILED BY	SHILL 8.81		

DIVISION OF HIGHWAYS

BRIDGE EXPANSION DEVICE

(0-2 INCH)

Designer	Structure Numbers	E-16-FH
Detailer S. HILL		
Drawing Number B 5	of 6	Drawings

(8-28-81)

Revision Dates	(Preliminary Stage Only)					
9-1-81	2-25-82					41

STATE DEPARTMENT OF HIGHWAYS
DIVISION OF HIGHWAYS STATE OF COLORADO
BOV FORM NO. 117
REV. MAR. 72

AS CONSTRUCTED			
NO REVISIONS	8-10-84	REVISED	VOID

FEDERAL ROAD REGION NO.	DIVISION	PROJ. NO.	SHEET NO.	TOTAL SHEETS
VIII	COLORADO	CC-07-0036-12	45	90

REVISIONS		

BRIDGE STANDARD 10

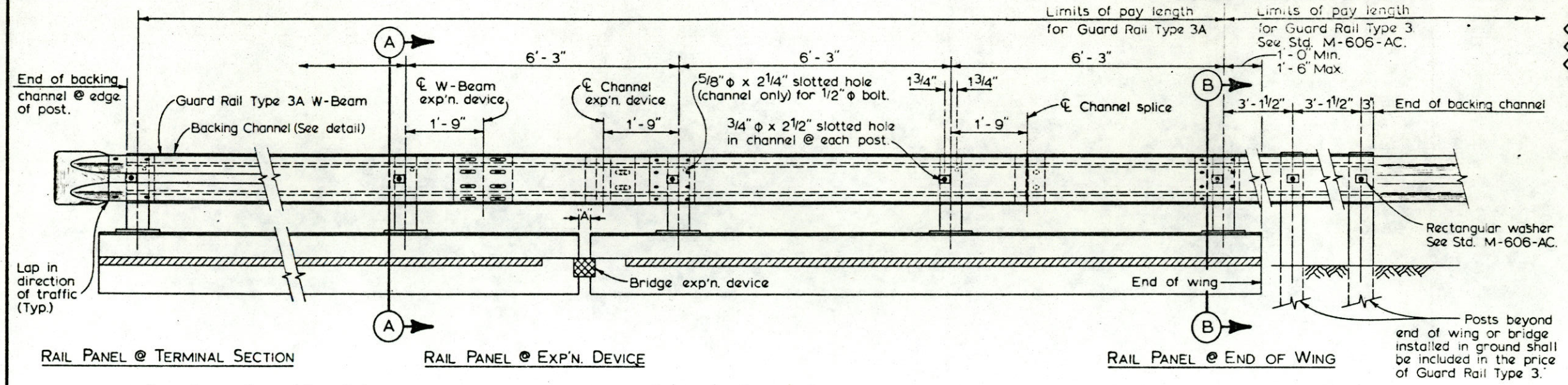

RAIL PANEL @ TERMINAL SECTION

RAIL PANEL @ EXP'N. DEVICE

RAIL PANEL @ END OF WING

NOTES:

ALL POSTS, CHANNEL, CHANNEL SPLICE, AND EXPANSION DEVICES SHALL BE FABRICATED FROM ASTM A36 STEEL AND SHALL BE GALVANIZED AFTER FABRICATION, IN ACCORDANCE WITH THE SPECIFICATIONS, AND SHALL BE MEASURED AND PAID FOR, IN ACCORDANCE WITH THE SPECIFICATIONS, UNDER ITEM 509, STRUCTURAL STEEL (GALVANIZED).

ALL ANCHOR BOLTS AND MISCELLANEOUS BOLTS, NUTS, AND WASHERS SHALL BE GALVANIZED, IN ACCORDANCE WITH THE SPECIFICATIONS, AND SHALL BE MEASURED AND PAID FOR UNDER ITEM 509, STRUCTURAL STEEL (GALVANIZED).

POST ANCHOR, ENCASED IN CONCRETE, SHALL BE ASTM A36 STEEL AND PAID FOR UNDER ITEM 509, STRUCTURAL STEEL (GALVANIZED).

W-BEAM SHALL BE MEASURED AND PAID FOR UNDER ITEM 606, GUARD RAIL TYPE 3A.

THE BACKING CHANNEL SHALL BE SHOP BENT OR FABRICATED TO FIT HORIZONTAL CURVE, WHEN RADIUS IS LESS THAN 1500 FEET.

CHANNEL SHALL BE CONTINUOUS OVER NOT LESS THAN TWO (2) POSTS.

POSTS AT BRIDGE EXPANSION DEVICE SHALL BE 1'-9" MINUMUM FROM THE CENTERLINE OF THE GUARD RAIL EXPANSION DEVICES TO THE CENTERLINE OF THE POST, MEASURED ALONG THE CENTERLINE OF THE POSTS.

POSTS SHALL BE PERPENDICULAR TO THE GRADE OF THE DECK.

ONE OR MORE 6'-3" POST SPACINGS MAY BE REDUCED (5'-0" MIN.) IN ORDER TO MAINTAIN DIMENSIONS FROM THE END OF WINGS AND EXPANSION JOINTS.

CONTRACTOR TO PROVIDE TERMINAL SECTION (FLARED) WHEN NO APPROACH GUARD RAIL IS USED. FOR DETAILS NOT SHOWN ON THIS SHEET, SEE STD. M-606-1

FOR ADDITIONAL DETAILS, SEE STD. M-606-1 .

OPTIONAL DRAIN HOLE FOR GALVANIZING MAY BE DRILLED, PUNCHED, OR CLIPPED, LEAVING SMOOTH SURFACES AND TRANSITIONS. NO FLAME CUTTING OR AIR CARBON ARC GOUGING ALLOWED.

ELEVATION BRIDGE RAIL

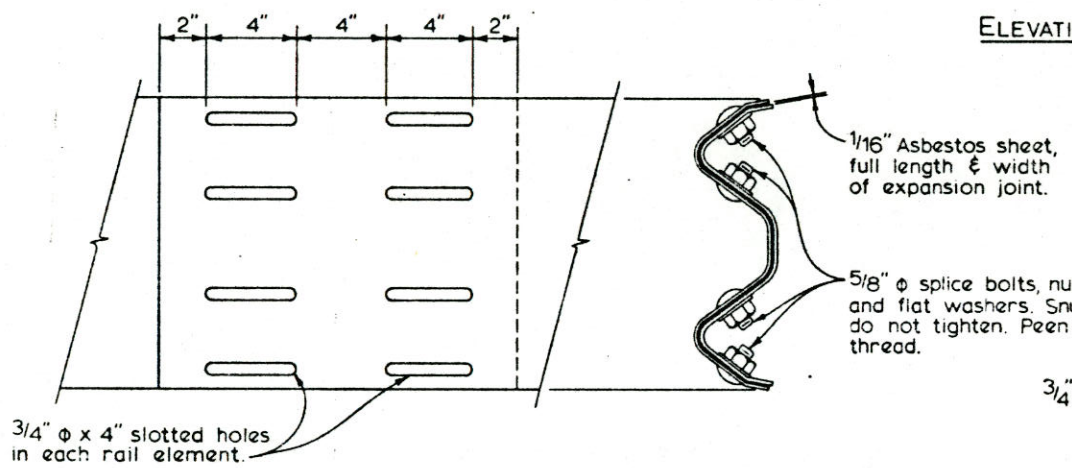

EXP'N. DEVICE (W-BEAM)

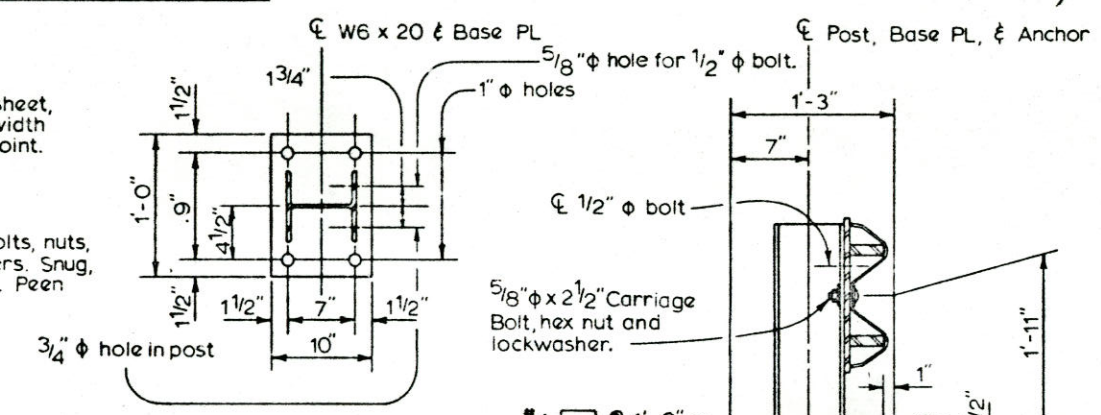

PLAN

SECTION (A)

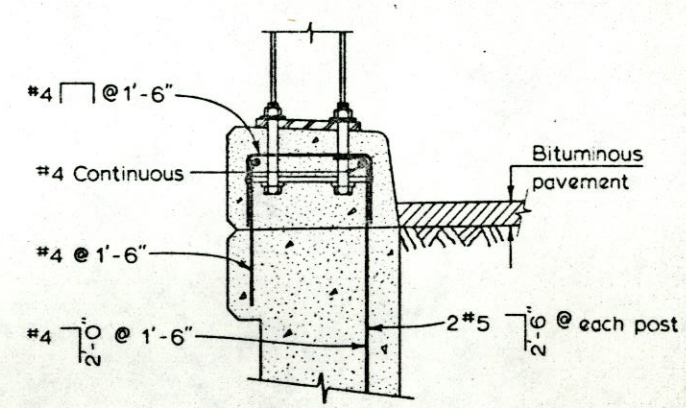

SECTION (B)

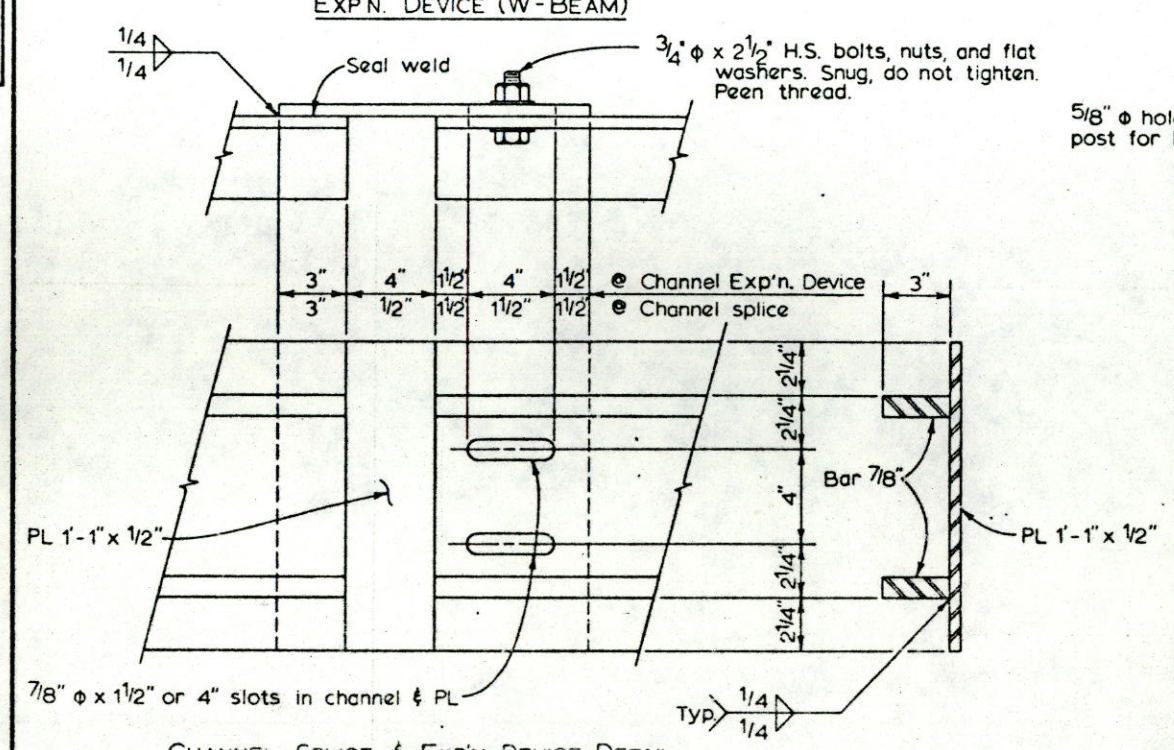

CHANNEL SPLICE & EXP'N DEVICE DETAIL

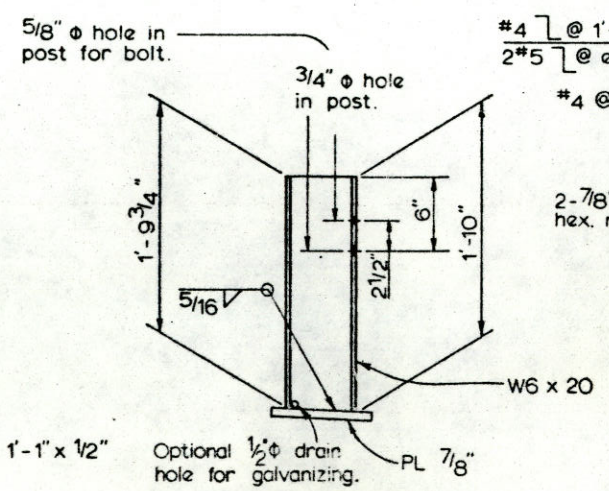

ELEVATION POST DETAIL

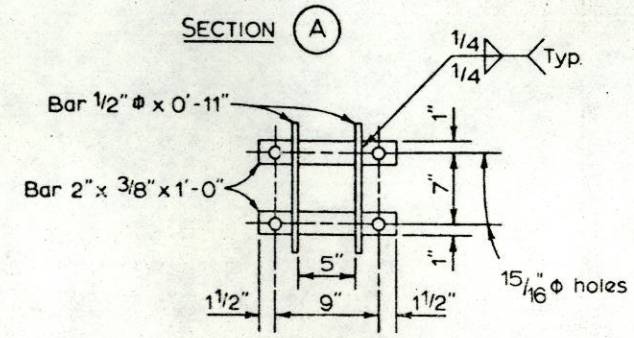

ANCHOR DETAIL

INITIAL	DATE	
DESIGNED BY	CHECKED BY	
CHECKED BY	QUANTITIES BY	
DETAILED BY	CHECKED BY	

DIVISION OF HIGHWAYS

BRIDGE RAIL TYPE 3

Designer	J. GRAVINA	Structure Numbers	E-16-FH
Detailer	S. HILL		
Drawing Number B 6		of 6	Drawings

(11- 1 -79)

Revision Dates (Preliminary Stage Only)						
2-1-80	4-1-80	3-1-81	6-5-81	12-1-81	2-15-82	10

AS CONSTRUCTED		
NO REVISIONS	REVISED 8-10-04	VOID

FEDERAL ROAD REGION NO.	DIVISION	PROJ. NO.	SHEET NO.	TOTAL SHEETS
VIII	COLORADO	CC 07-0036-12	46	90

REVISIONS		

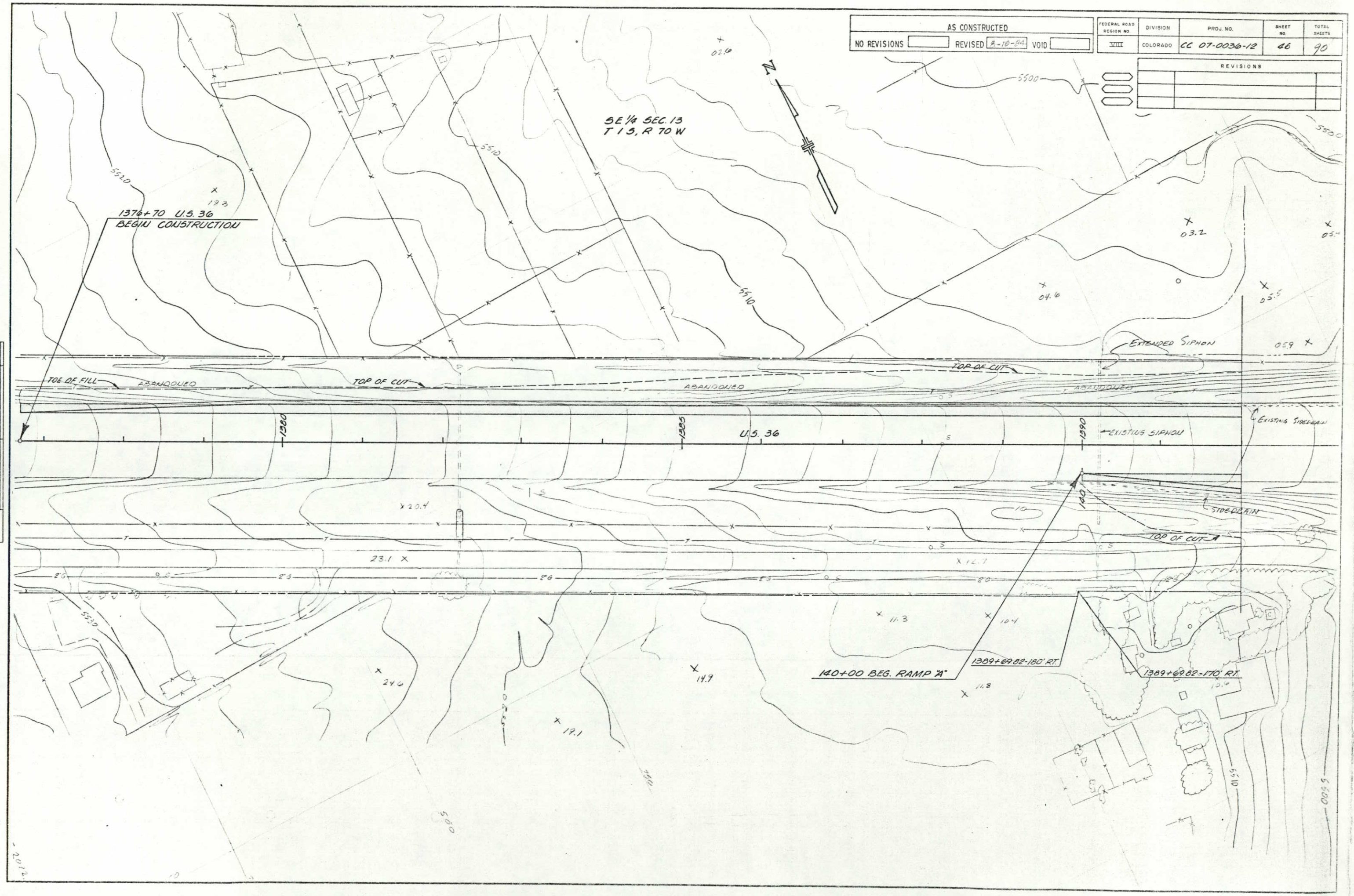

PLAN		
	SURVEYED	
	PLOTTED	
NOTE BOOK	ALIGNMENT CHECKED	
NO.	RT. OF WAY CHECKED	
		DATE
		BY

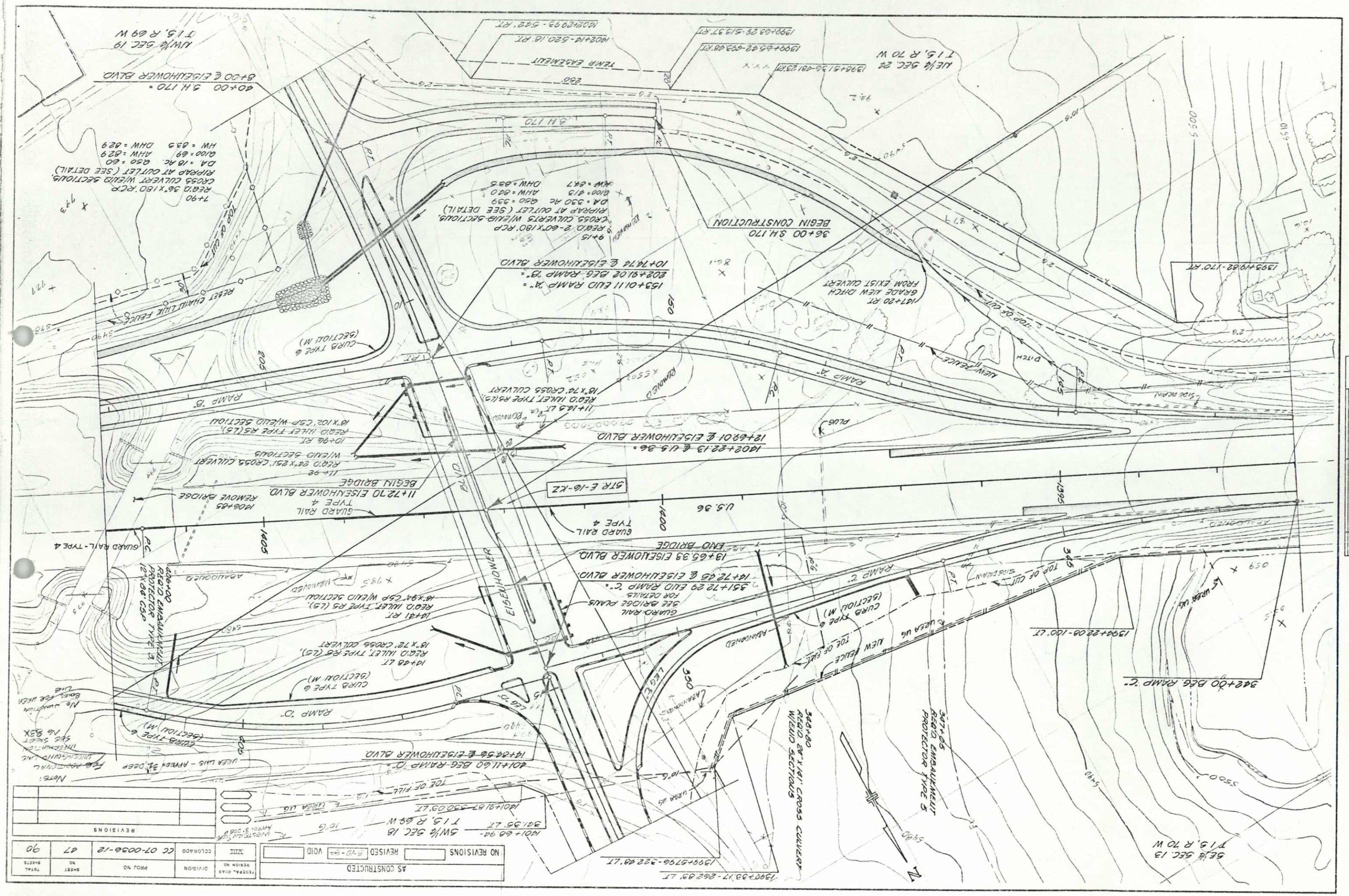
PLAN
SURVEYED
PLOTTED
DRAWN
BY
CHECKED
BY OF WAY CHECKED
NOTE BOOK
NO
DATE
BY
REVISIONS
NO REVISIONS
REVISED
VOID
AS CONSTRUCTED
FEDERAL ROAD REGION NO
DIVISION
PROJ NO
SHEET NO
TOTAL SHEETS
XIII
COLORADO
CC 07-0036-12
47
90
Note:
For Mainline Underground Utilities See Sheet No 88X
No Jumpting Bores For Utility Line
CURB TYPE 6 (SECTION M)
RAMP "D"
RAMP "B"
RAMP "A"
RAMP "C"
RAMP "E"
EIGENHOWER BLVD
U.S. 36
GTR E-16-KZ
GUARD RAIL TYPE 4
GUARD RAIL - TYPE 4
REMOVE BRIDGE
BEGIN BRIDGE
END BRIDGE
11+72.10 EISENHOWER BLVD.
13+65.33 EISENHOWER BLVD.
14+72.45 @ EISENHOWER BLVD.
351+72.29 EIID RAMP "C"
GUARD RAIL SEE BRIDGE PLANS FOR DETAILS
14+48.56 @ EISENHOWER BLVD
401+11.60 BEG RAMP "D"
402+22.13 @ U.S. 36
12+69.01 @ EISENHOWER BLVD
11+14.5 LT
REQ'D INLET TYPE R5(L5) 18"X74' CR055 CULVERT
11+92
REQ'D 24"X251' CR055 CULVERT W/EIID SECTIONS
10+96 RT
REQ'D INLET TYPE R5(L5) 18"X102' CSP W/EIID SECTION
14+48 LT
REQ'D INLET TYPE R5(L5) 18"X72' CR055 CULVERT
14+71 RT
REQ'D INLET TYPE R5 (L5) 18"X94' CSP W/EIID SECTION
400+00 REQ'D EMBANKMENT PROTECTOR TYPE 3 12"X94' CSP
153+01.11 EIID RAMP "A"
202+91.02 BEG RAMP "B"
10+76.74 @ EISENHOWER BLVD
9+15
REQ'D 2-60"X180' RCP CR055 CULVERTS W/EIID SECTIONS RIPRAP AT OUTLET (SEE DETAIL)
DA = 330 AC Q50 = 339
Q100 = 413 AHW = 820
HW = 847 DHW = 835
7+90
REQ'D 36"X180' RCP CR055 CULVERT W/EIID SECTIONS RIPRAP AT OUTLET (SEE DETAIL)
DA = 18 AC. Q50 = 60
Q100 = 69 AHW = 829
HW = 835 DHW = 829
40+00 S.H. 170 @ EISENHOWER BLVD
36+00 S.H. 170 BEGIN CONSTRUCTION
147+20 RT GRADE NEW DITCH FROM EXIST CULVERT
NEW FENCE
TOP OF CUT
SIDEWALK
DITCH
REMOVE
REPLACE CHAIN LINK FENCE
TOE OF FILL
TOE OF FILL
TOE OF FILL
NEW FENCE
ABANDONED
REQ'D EMBANKMENT PROTECTOR TYPE 5
364+80 REQ'D 24"X41' CROSS CULVERT W/EIID SECTIONS
342+00 BEG RAMP "C"
1399+22.08-100'LT
1399+93.17-262.83' LT
1399+57.96-322.49' LT
1401+68.92-331.35' LT
1401+91.87-330.03' LT
1398+51.36-491.23' RT
1399+65.42-493.48' RT
1399+63.29-519.37' RT
1402+14-520.18' RT
1402+09.92-522' RT
1393+19.82-170' RT
S4 1/2 SEC. 13 T 15, R 70 W
NE 1/4 SEC. 24 T 15, R 70 W
SW 1/4 SEC. 18 T 15, R 69 W
NW 1/4 SEC. 19 T 15, R 69 W

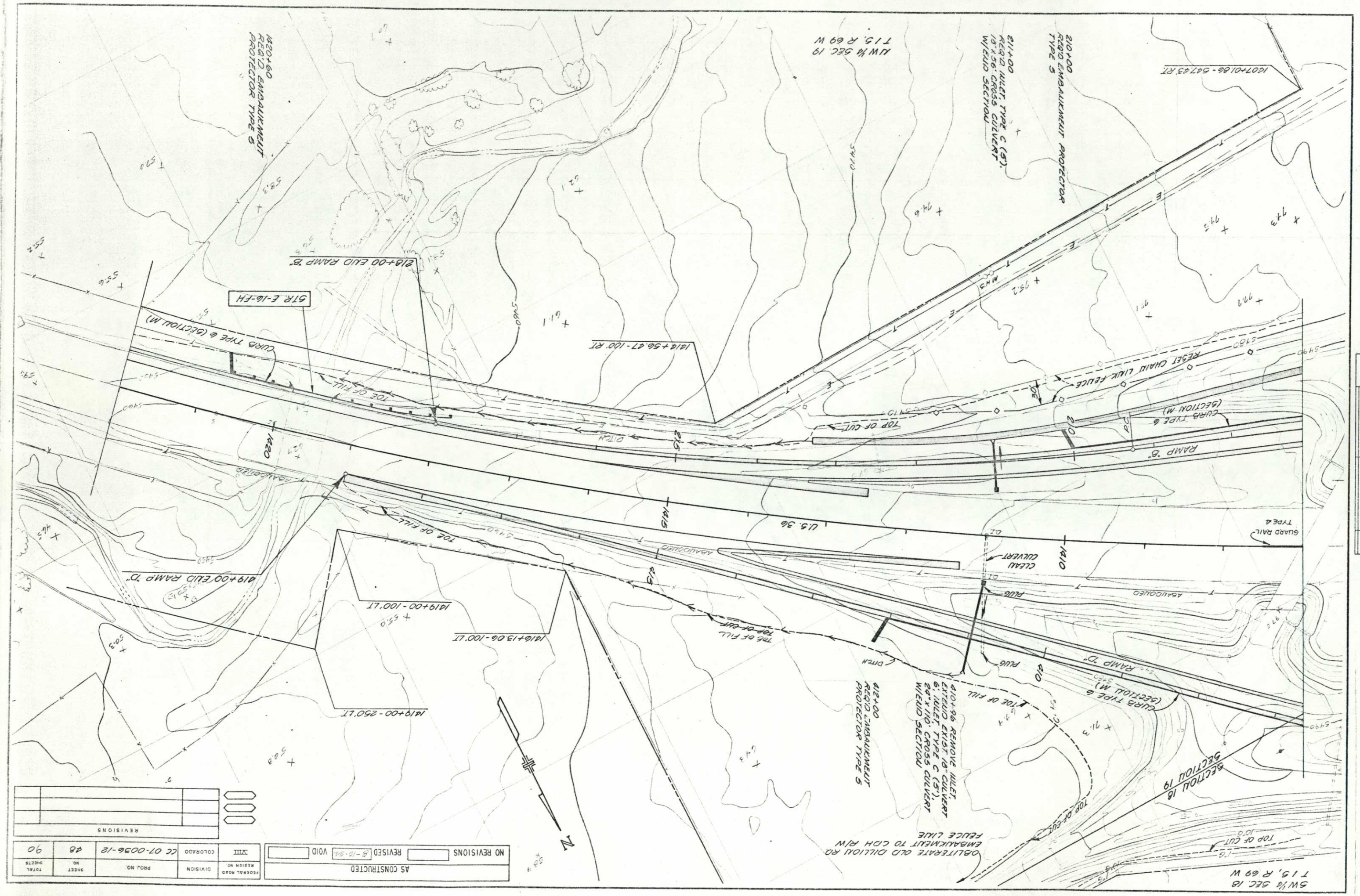

REVISIONS		

AS CONSTRUCTED		
NO REVISIONS	REVISED 8-12-84	VOID

FEDERAL ROAD REGION NO	DIVISION	PROJ. NO.	SHEET NO	TOTAL SHEETS
VIII	COLORADO	CC 07-0036-12	48	90

PLAN

SURVEYED
PLOTTED
TEMPLATE ADDED
RT. OF WAY CHECKED

NOTE BOOK
NO.

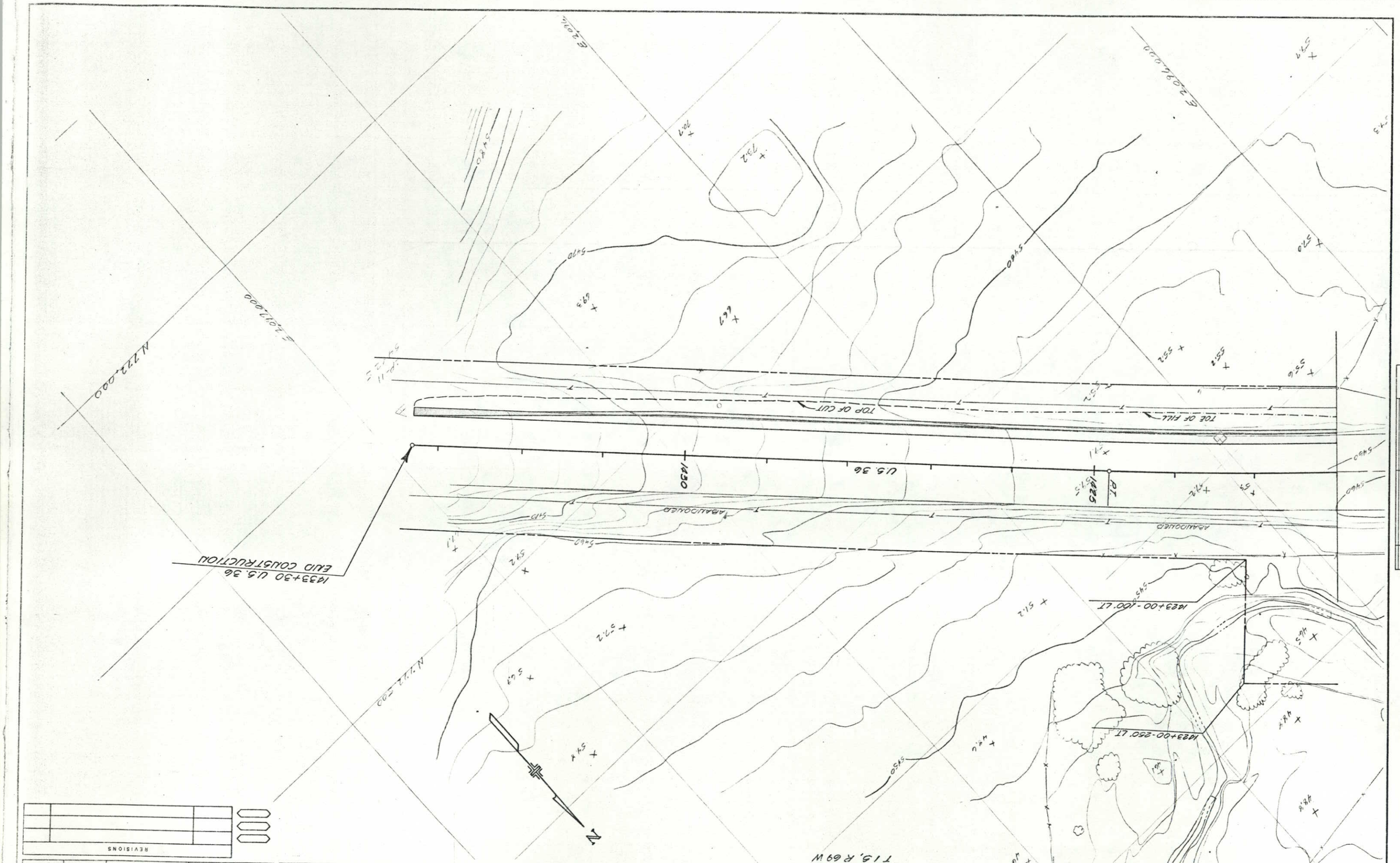
N 772,000
E 2,011,000
E 2,028,000
E 2,045,000
TOP OF CUT
TOE OF FILL
U.S. 36
1430
1425
PI
ABANDONED
ABANDONED
1433+30 U.S. 36
EAID CONSTRUCTION
1423+00 - 400' LT
1423+00 - 250' LT
N
NW¼ SEC 19
T 1S, R 69 W
PLAN
SURVEYED
DRAWN
ALIGNMENT CHECKED
PT. OF WAY CHECKED
NOTE BOOK
NO
BY
DATE
AS CONSTRUCTED
NO REVISIONS
8-10-84
REVISED
VOID
REVISIONS
FEDERAL ROAD REGION NO
VIII
DIVISION
COLORADO
PROJ NO
CC 07-036-12
SHEET NO
49
TOTAL SHEETS
90

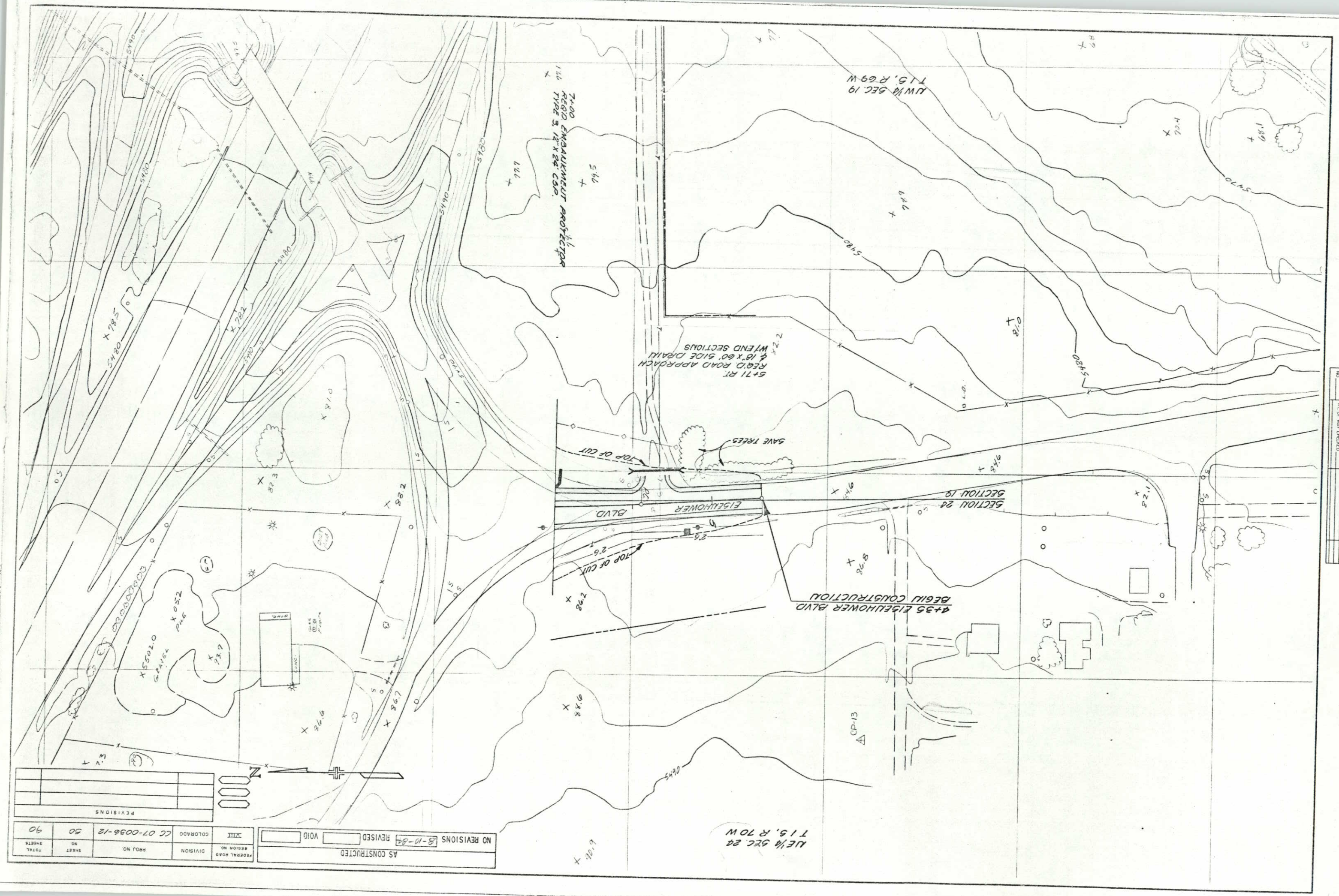
NW¼ SEC. 19
T15, R69W
7+00
RCB/D ENCRAUKMENT PROTECTOR
TYPE 3, 12" x 24" CSP.
5+71 RT
RCB/D ROAD APPROACH
& 18"x 60' SIDE DRAIN
W/END SECTIONS
SAVE TREES
TOP OF CUT
TOP OF CUT
EISENHOWER BLVD
SECTION 24
SECTION 19
4+35 EISENHOWER BLVD
BEGIN CONSTRUCTION
CP-13
SE¼ SEC. 24
T15, R70W
GRAVEL PILE
5480
5490
5500
5510
5520
5530
5540
5550
5560
5570
5580
5590
5600
5610
5620
5630
5640
5650
5660
5670
5680
5690
5700
5710
5720
5730
5740
5750
5760
5770
5780
5790
5800
5810
5820
5830
5840
5850
5860
5870

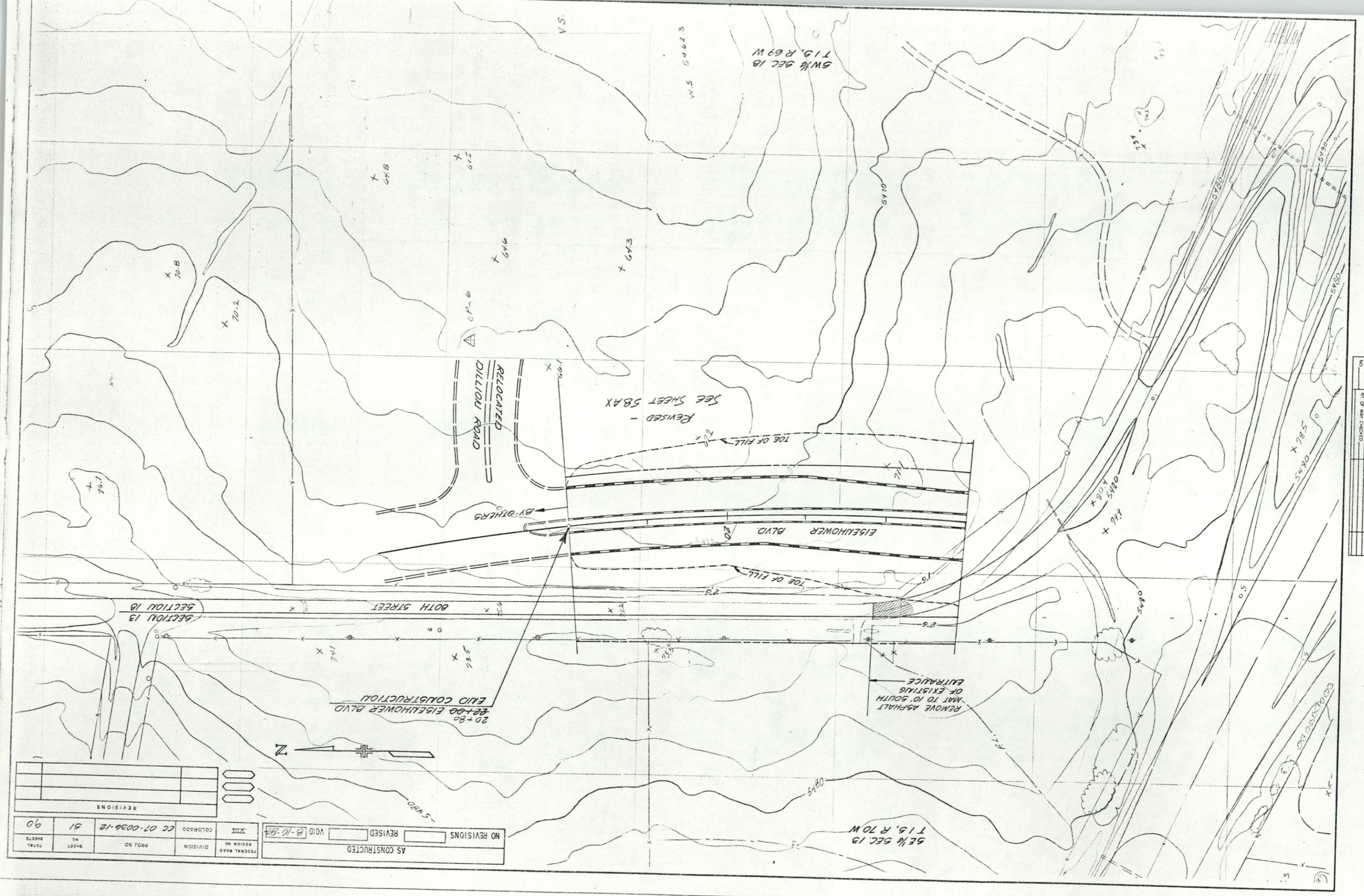

PLAN

SURVEYED
PLOTTED
ALIGNMENT PROPOSED
RIT OF WAY CHECKED

NOTE BOOK NO.

DATE	BY

FEDERAL ROAD REGION NO	DIVISION	PROJ. NO	SHEET NO	TOTAL SHEETS
VIII	COLORADO	CC 07-0036-12	61	90

REVISIONS

AS CONSTRUCTED

NO REVISIONS ☐ REVISED ☐ VOID 8-10-84

AS CONSTRUCTED			
NO REVISIONS 8-10-84	REVISED	VOID	

FEDERAL ROAD REGION NO.	DIVISION	PROJ NO.	SHEET NO.	TOTAL SHEETS
VIII	COLORADO	CC 07-0036-12	52	90

REVISIONS		

PROFILE
SURVEY FIELD
PLOTTED
GRADES CHECKED
B.M.'S NOTED
STRUCTURE NOTATIONS CHKD
NOTE PROFILE
NO.

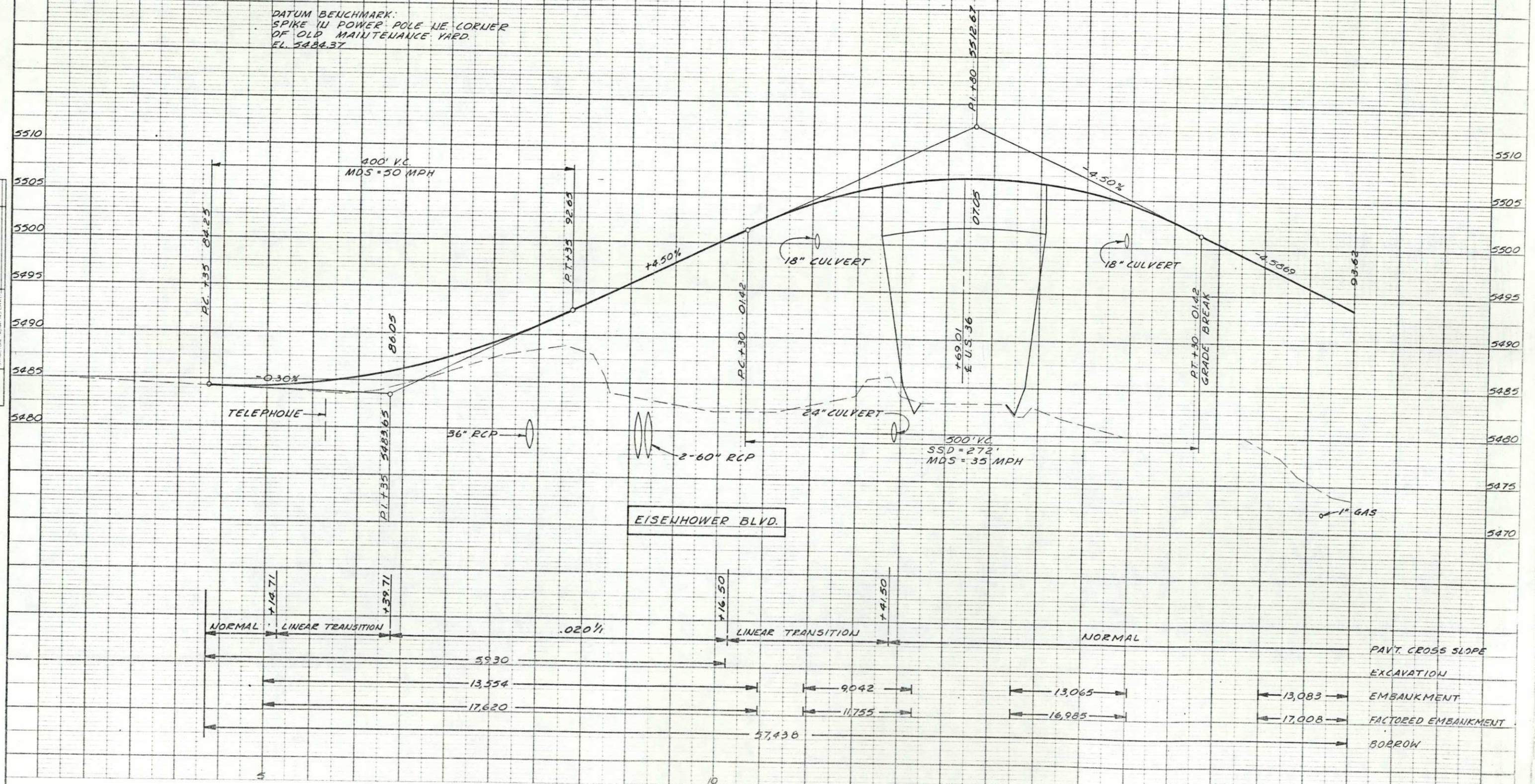

AS CONSTRUCTED			
NO REVISIONS 8-10-84	REVISED	VOID	

FEDERAL ROAD REGION NO.	DIVISION	PROJ. NO.	SHEET NO.	TOTAL SHEETS
VIII	COLORADO	CC 07-0036-12	53	90

REVISIONS		

NOTE: THE CONSTRUCTION PLANS FOR THE CONTINUATION OF EISENHOWER BLVD. FROM STA. 22+00 TO THE NORTH SHOW THE PROFILE GRADE LINE AT THE TOP OF THE MEDIAN. THEREFORE, ALL PROFILE GRADE ELEVATIONS ON THOSE PLANS ARE 0.34' HIGHER THAN ELEVATIONS SHOWN HERE.

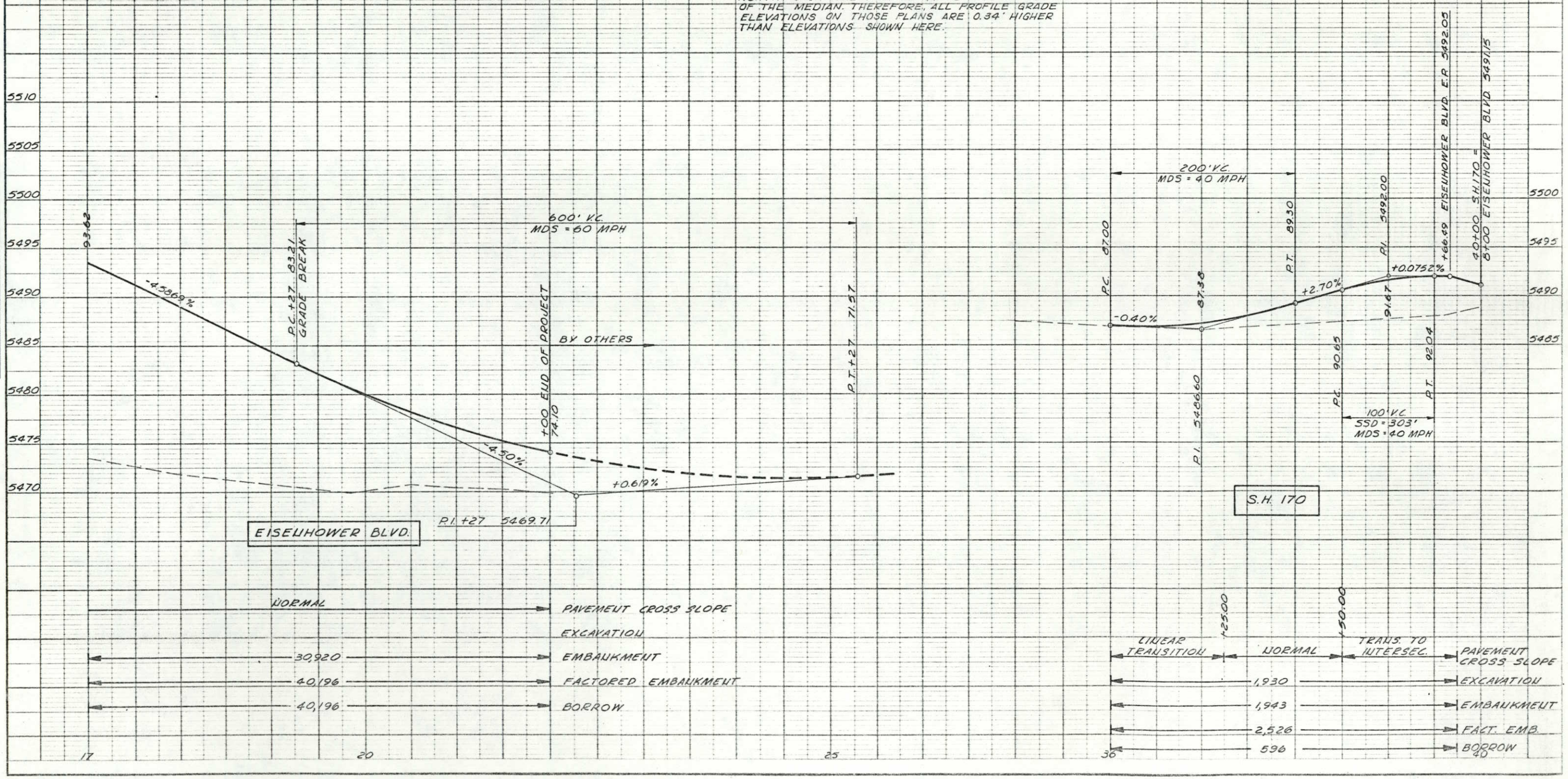

PROFILE
SURVEYED
PLOTTED
ALIGNMENT CHECKED
B.M.'S NOTED
STRUCTURE NOTATIONS CHKD.
NOTE BOOK
NO.
BY
DATE

AS CONSTRUCTED			
NO REVISIONS 8-10-84	REVISED		VOID

FEDERAL ROAD REGION NO	DIVISION	PROJ NO	SHEET NO	TOTAL SHEETS
VIII	COLORADO	CC 07-0036-12	54	90

REVISIONS		

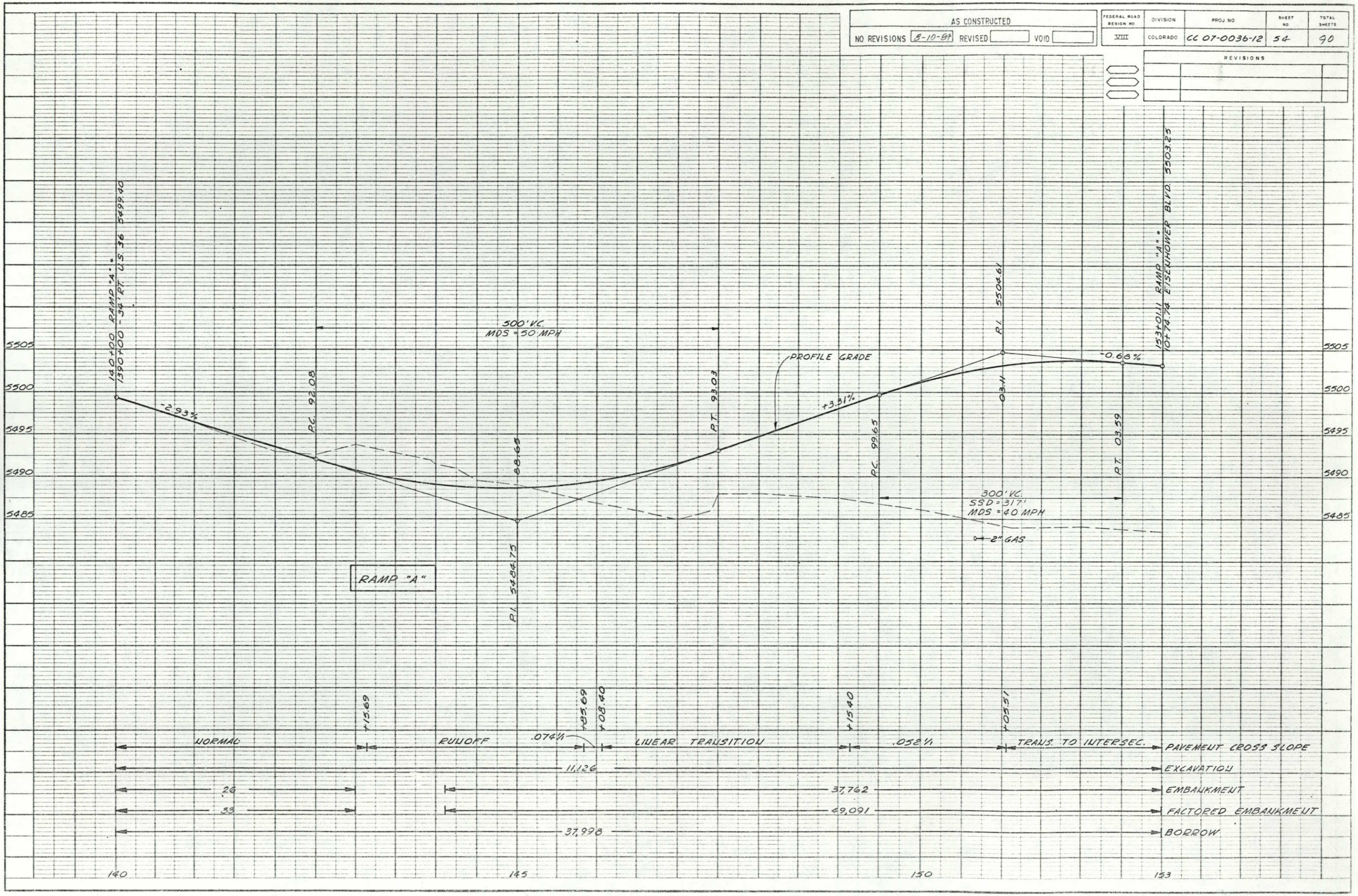

PROFILE
SURVEYED
PLOTTED
GRADES CHECKED
BY
STRUCTURE DATA
NOTE BOOK NO.

AS CONSTRUCTED					
NO REVISIONS	8-10-84	REVISED		VOID	

FEDERAL ROAD REGION NO.	DIVISION	PROJ NO.	SHEET NO.	TOTAL SHEETS
VIII	COLORADO	CC 07-0036-12	55	90

REVISIONS		

PROFILE
SURVEYED
PLOTTED
GRADES CHECKED
BRIDGE
STRUCTURE NOTATIONS CHKD
NOTE BOOK NO.
BY
DATE

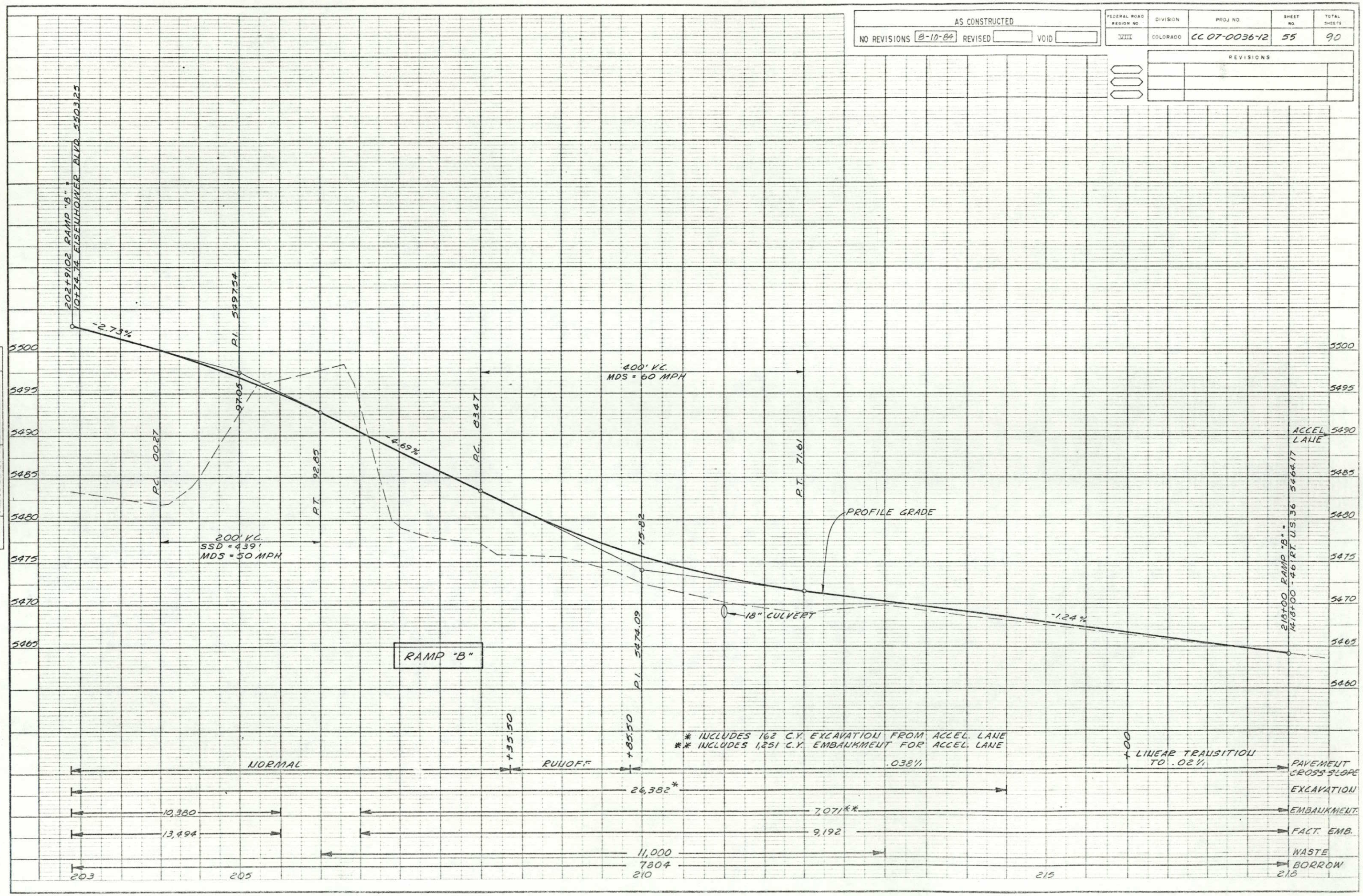

AS CONSTRUCTED			
NO REVISIONS	8-10-84	REVISED	VOID

FEDERAL ROAD REGION NO	DIVISION	PROJ NO	SHEET NO	TOTAL SHEETS
VIII	COLORADO	CC 07-0036-12	56	90

REVISIONS		

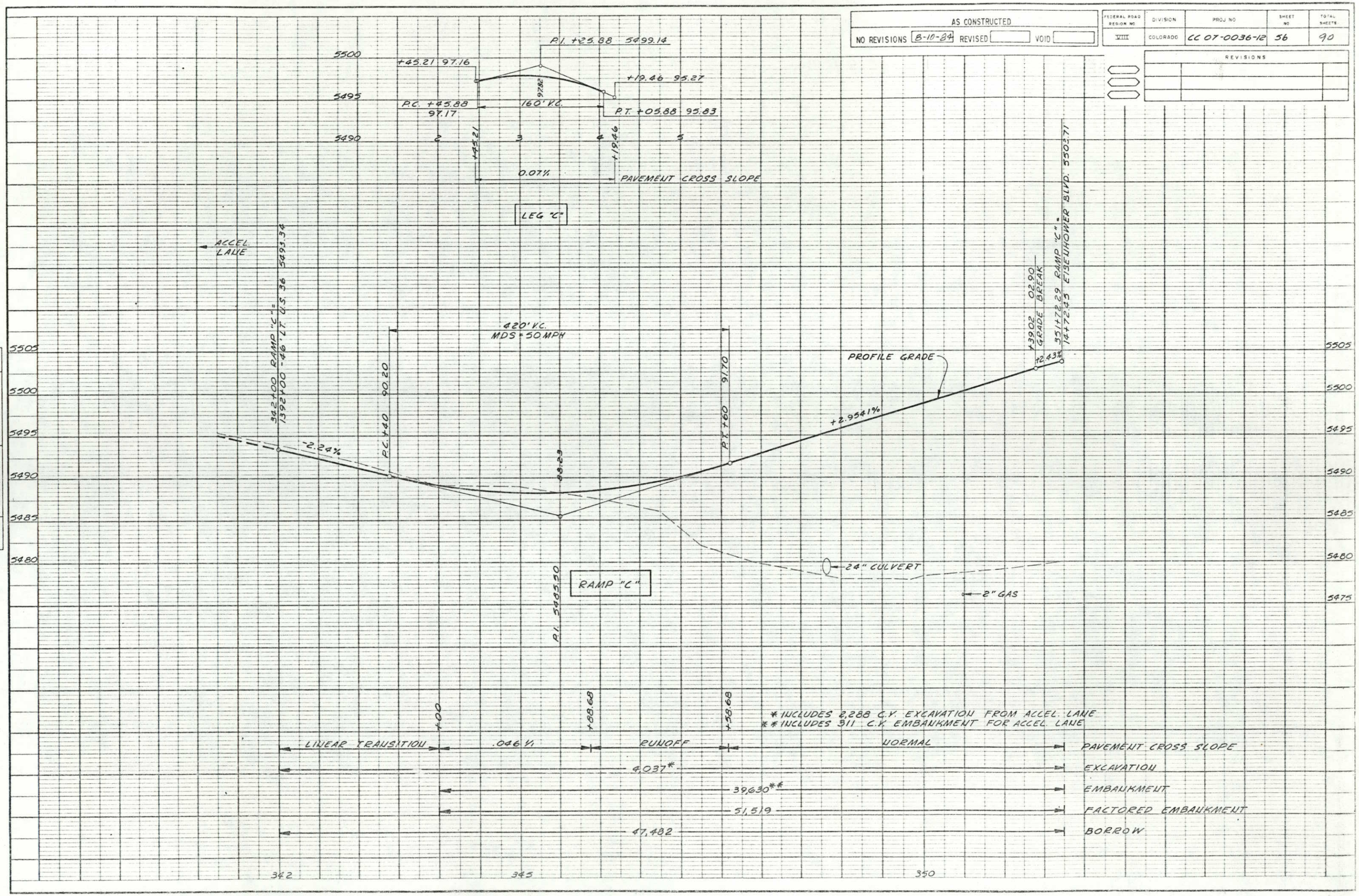

PROFILE
SURVEYED
PLOTTED
GRADES CHECKED
BY
NOTE BOOK
NO.
STRUCTURE NOTAT NO CHYD
DATE
BY

AS CONSTRUCTED			
NO REVISIONS B-10-84	REVISED	VOID	

FEDERAL ROAD REGION NO	DIVISION	PROJ. NO.	SHEET NO	TOTAL SHEETS
VIII	COLORADO	CC 07-0036-12	57	90

REVISIONS

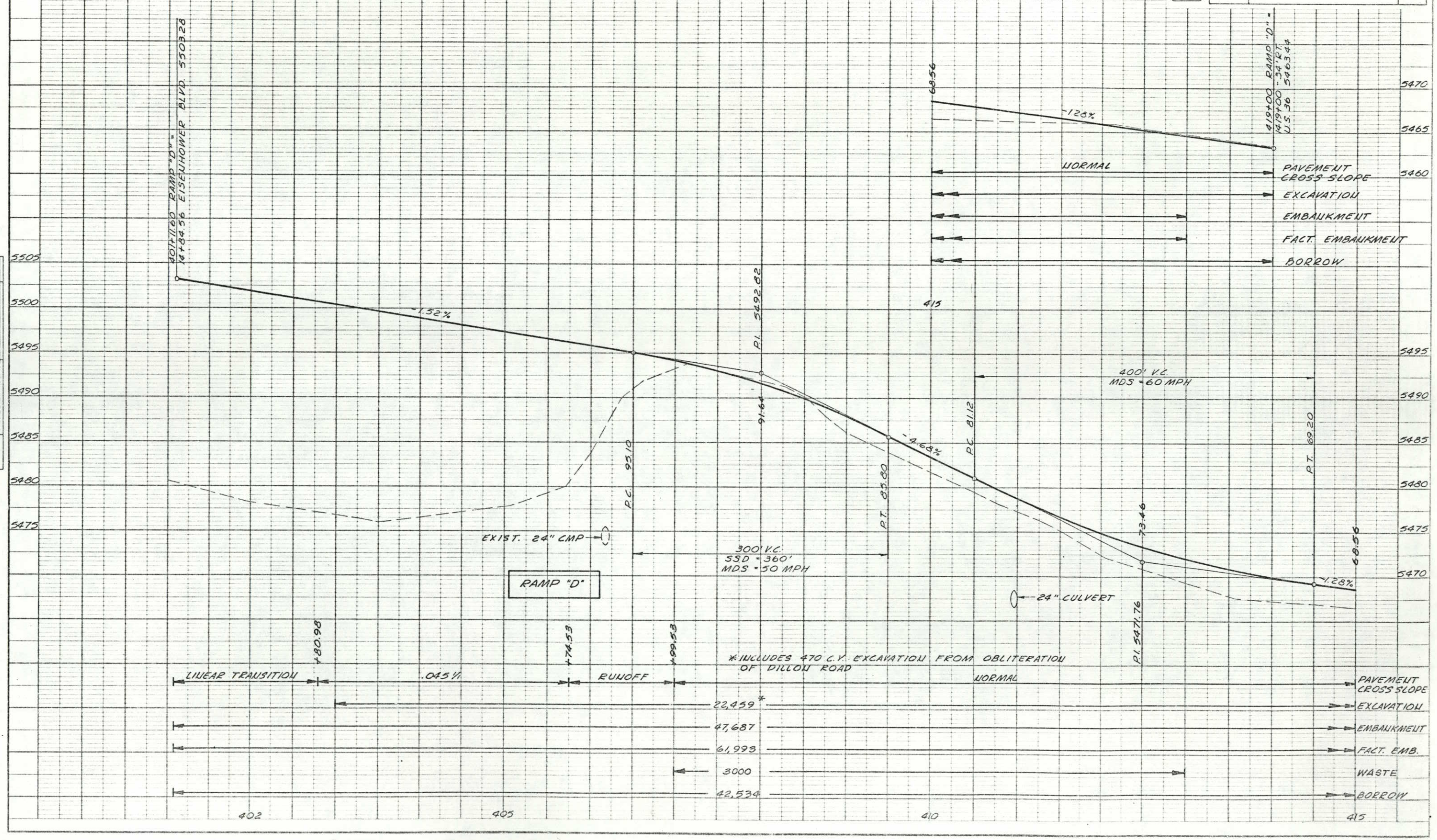

PROFILE
SURVEYED
PLOTTED
GRADES CHECKED
B.M.'S NOTED
STRUCTURE NOTES
NOTE BOOK
NO.
BY
DATE