STATE DEPARTMENT OF HIGHWAYS
DIVISION OF HIGHWAYS — STATE OF COLORADO

PLAN AND PROFILE OF PROPOSED

COLORADO PROJECT NO. CXFC 06-0036-05

STATE HIGHWAY NO. 36 & 7

LARIMER COUNTY

FEDERAL ROAD REGION NO	DIVISION	PROJECT NO	SHEET NO
VIII	COLORADO	CXFC 06-0036-05	1

AS CONSTRUCTED

NO REVISIONS ☐ REVISED 5-20-89 VOID ☐

	REVISIONS		
R-1	2-7-89	SHEETS 1, 3, 9, 10, 13	G.R.R.

SCALES OF ORIGINAL DRAWINGS

ON PLAN, 1 IN. = 50 FT.

AS CONSTRUCTED PLANS
RETURN TO DIST. 4 DESIGN

LENGTH & DESIGN DATA

STATION	ROADWAY LIN. FT.
Sta. 1111+00 Begin CXFC 06-0036-05 MP 0.72	
	2700.00
Sta. 1138+00 End CXFC 06-0036-05 MP 0.21	
TOTAL	2700.00

SUMMARY	LIN. FT.	MILES
PROJECT NET & GROSS LENGTH	2700.00	0.511

DESIGN DATA

MAXIMUM DEGREE OF CURVE	12° 00'
MAXIMUM GRADE	3.75 %
MINIMUM S.S.D. HORIZONTAL	265'
MINIMUM S.S.D. VERTICAL	>300'
MAXIMUM DESIGN SPEED	30 MPH
2007 DESIGN TRAFFIC VOLUME	DHV 2520
	ADT 15,750
	4% TRUCKS

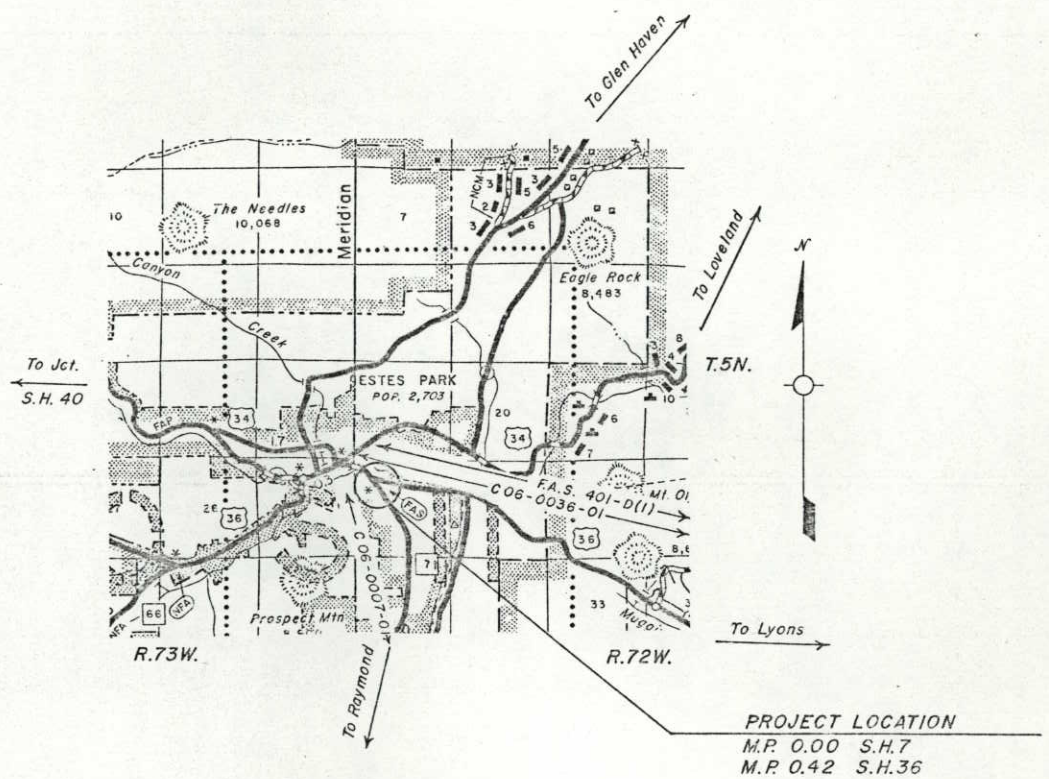

SCALE IN MILES

0 .05 1 2 3 4

0 1 2 3 4 5 6

SCALE IN KILOMETERS

SHEET NO.	INDEX OF SHEETS
1	TITLE SHEET
2	STANDARD PLANS LIST
3	TYPICAL SECTION, GENERAL NOTES
4-6	SUMMARY OF APPROXIMATE QUANTITIES
7	SURFACING PLAN, REMOVAL OF GUARDRAIL, TABULATION OF CURB AND GUTTER, SEEDING PLAN, SUMMARY OF EARTHWORK QUANTITIES
8	TABULATION OF SIGNING QUANTITIES, SCHEDULE OF CONSTRUCTION TRAFFIC SIGNS
9-10	TABULATION OF SIGNS
11	TRAFFIC SIGNAL PLAN
12-14	LINE SHEETS
15	STAKING PLAN
16-18	STRIPING PLAN
19-20	FINAL SIGNING
21-22	CLASS III SIGNS 2 SHEETS
23	BREAK-AWAY SIGN SUPPORT DETAILS

NEW AND REVISED STANDARDS

M-620-2	FIELD LABORATORY - CLASS 2 (5-25-88)	1 SHEET
M-203-12	SUPERELEVATION OF CURVES — STREETS (8-16-84)	1 SHEET

DIVISION OF HIGHWAYS

APPROVED: Robert L. Clevenger 1/27/89
CHIEF ENGINEER DATE

AS CONSTRUCTED INFORMATION

CONTRACTOR Coulson Excavating
RESIDENT ENGINEER Hal Toland
(Project or Resident)
PROJECT STARTED 3-6-89
PROJECT COMPLETED 5-20-89
AS CONSTRUCTED PLANS APPROVED [signature]
Dist. Const. Engr. 8-23-89
TITLE DATE

TX 332

87463 GRR/DIST 4

AS CONSTRUCTED		
NO. REVISIONS 5-20-89	REVISED	VOID

FEDERAL ROAD REGION NO.	DIVISION	PROJECT NO.	SHEET NO.	TOTAL SHEETS
VIII	COLORADO	CXFC 06-0036-05	2	

Plan No.	Title	Page
■ M-100-1	STANDARD SYMBOLS	1
□ M-107-1	TEMPORARY EROSION CONTROL	2
■ M-203-1	APPROACH ROADS, FLARING, CUT SLOPE TREATMENT, BRIDGE & CREST WIDENING	3
□ M-203-2	DITCH TYPES	4
□ M-203-10	SUPERELEVATION OF CURVES - CROWNED HIGHWAYS	5
□ M-203-11	SUPERELEVATION OF CURVES - DIVIDED HIGHWAYS - SHOULDER PIVOT	6
□ M-203-12	SUPERELEVATION OF CURVES - STREETS	7
□ M-203-13	SUPERELEVATION OF CURVES - DIVIDED HIGHWAYS - CENTER PIVOT	8
■ M-206-1	EXCAVATION AND BACKFILL FOR STRUCTURES (2 SHEETS)	9
□ M-206-2	EXCAVATION AND BACKFILL FOR BRIDGES	11
□ M-214-1	PLANTING DETAILS	12
□ M-412-1	CONCRETE PAVEMENT JOINTS	13
□ M-504-1	STEEL CRIBBING	14
□ M-506-1	GABIONS AND SLOPE MATTRESS	15
□ M-510-1	STRUCTURAL PLATE CULVERT PIPE - H-20 LOADING (2 SHEETS)	16
□ M-601-1	SINGLE CONCRETE BOX CULVERT	18
□ M-601-2	DOUBLE CONCRETE BOX CULVERT	19
□ M-601-3	TRIPLE CONCRETE BOX CULVERT	20
□ M-601-10	HEADWALL FOR PIPE CULVERTS	21
□ M-601-11	TYPE "S" SADDLE HEADWALL FOR PIPE CULVERTS	22
□ M-601-12	HEADWALL, INTERCEPTING HEADWALL AND CULVERT OUTLET PAVING	23
□ M-601-20	WINGWALLS FOR PIPE OR BOX CULVERTS	24
■ M-603-1	METAL CULVERT PIPE - H-20 LOADING (2 SHEETS)	25
■ M-603-2	REINFORCED CONCRETE PIPE	27
□ M-603-3	PRECAST CONCRETE BOX CULVERT	28
□ M-603-10	CONCRETE AND METAL END SECTIONS	29
□ M-604-1	PIPE SEWER IN TRENCH	30
■ M-604-10	INLET, TYPE C	31
□ M-604-11	INLET, TYPE D	32
□ M-604-12	CURB INLET, TYPE R (2 SHEETS)	33
□ M-604-13	CONCRETE INLET, TYPE 13	35
□ M-604-20	MANHOLES	36
■ M-604-21	STEPS FOR MANHOLES & INLETS	37
□ M-606-1	GUARD RAIL, TYPE 3, W-BEAM (8 SHEETS)	38
□ M-606-2	GUARD RAIL, TYPE 3, W-BEAM FOR LOCAL ROADS & STREETS (4 SHEETS)	46
□ M-606-10	GUARD RAIL, TYPE 4, CONCRETE BARRIER, CAST-IN-PLACE	50
□ M-606-11	GUARD RAIL, TYPE 4, CONCRETE BARRIER, PRECAST-PORTABLE	51
□ M-607-1	WIRE FENCES AND GATES (2 SHEETS)	52
□ M-607-2	CHAIN LINK FENCE (3 SHEETS)	54
□ M-607-3	BARRIER FENCE	57
□ M-607-4	DEER FENCE AND GATE (2 SHEETS)	58
□ M-607-10	PICKET SNOW FENCE	60
■ M-608-1	CURB RAMPS	61
■ M-609-1	CURBS AND GUTTERS	62
□ M-611-1	CATTLE GUARD - WELDED GRILL UNITS - 10' THRU 42' ROADWAYS (2 SHEETS)	63
□ M-613-1	HIGHWAY LIGHTING (2 SHEETS)	65
□ M-615-1	EMBANKMENT PROTECTOR, TYPES 3 & 4	67
□ M-615-2	EMBANKMENT PROTECTOR, TYPE 5	68
□ M-616-1	INVERTED SIPHON (ALSO USE M-603 OR M-604 AS REQUIRED)	69
□ M-620-1	FIELD LABORATORY - CLASS 1	70
□ M-620-2	FIELD LABORATORY - CLASS 2	71
□ M-620-11	FIELD OFFICE - CLASS 1	72
□ M-620-12	FIELD OFFICE - CLASS 2	73
□ S-612-1	TYPICAL DELINEATOR INSTALLATIONS (4 SHEETS)	75
■ S-614-1	TYPICAL GROUND SIGN PLACEMENT	79
■ S-614-2	CLASS I GROUND SIGN INSTALLATIONS	80
■ S-614-3	CLASS II GROUND SIGN INSTALLATIONS	81
■ S-614-4	CLASS III SIGNS, LAMINATED ALUMINUM PANELS AND POST SPACING TABLE (2 SHEETS)	82
□ S-614-5	BREAK-AWAY SIGN SUPPORT DETAILS FOR GROUND SIGNS (2 SHEETS)	84
□ S-614-6	CONCRETE FOOTINGS AND SIGN ISLANDS FOR CLASS III SIGNS (2 SHEETS)	86
■ S-614-10	TYPICAL MARKER ASSEMBLY INSTALLATIONS	88
□ S-614-11	MILEPOST SIGN AND INSTALLATION	89
□ S-614-12	STRUCTURE NUMBER INSTALLATION (BRIDGE INFORMATION SHEET)	90
□ S-614-13	STANDARD RAILROAD CROSSING SIGNS AND MARKINGS	91
□ S-614-20	TYPICAL POLE MOUNT SIGN INSTALLATION	92
□ S-614-21	CONCRETE BARRIER SIGN POST INSTALLATIONS	93
□ S-614-22	TYPICAL MULTI-SIGN INSTALLATIONS	94
□ S-614-30	INTERSTATE ROUTE MARKERS	95
■ S-614-31	U. S. & COLORADO ROUTE MARKERS	96
■ S-614-32	AUXILIARY MARKERS	97
■ S-614-40	TRAFFIC SIGNAL INSTALLATION DETAILS (3 SHEETS)	98
■ S-614-50	TRAFFIC CONTROLS FOR HIGHWAY CONSTRUCTION (4 SHEETS)	101
■ S-614-51	BARRICADES, DRUMS, CONCRETE BARRIER (TEMP) & VERTICAL PANELS	105
■ S-627-1	TYPICAL PAVEMENT MARKINGS (3 SHEETS)	106

THE STANDARD PLAN SHEETS INDICATED HEREON BY A MARKED BOX ARE TO BE USED TO CONSTRUCT THIS PROJECT.

DEPARTMENT OF HIGHWAYS
STATE OF COLORADO
DIVISION OF HIGHWAYS

STANDARD PLANS LIST

M & S STANDARDS — JANUARY, 1982

ATE OF COLORADO
ATE DEPARTMENT OF HIGHWAYS
VISION OF HIGHWAYS:
O. H. FORM NO. 126:
V. FEB. 1984

AS CONSTRUCTED			
NO REVISIONS 5-20-89	REVISED		VOID

(R-1) 2-7-89, REVISED NOTES, G.R.R.

FED. ROAD REGION	DIVISION	PROJ. NO.	SHEET NO.	SHEET TOTALS
VIII	COLO.	CXFC 06-0036-05	3	

TYPICAL SECTION

THE DEPTH AND WIDTH OF THE SIDE DITCH SHALL BE VARIED WHERE NECESSARY IN ORDER TO PROVIDE PROPER DRAINAGE.

BREAK POINTS ON SLOPES AND IN BOTTOMS OF DITCHES SHALL BE ROUNDED DURING CONSTRUCTION FOR A PLEASING APPEARANCE. SEE STANDARDS FOR DETAILS OF CUT SLOPE TREATMENT, FLARING, AND WIDENING.

S.H. 36
Section A · Sta. 1110+00 TO 1123+00

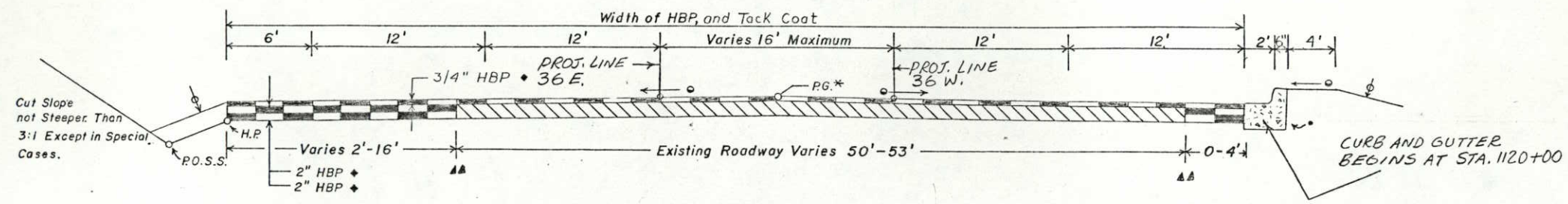

S.H. 36
Section B Sta. 1123+00 TO 1127+00 AND 1133+00 TO 1138+00

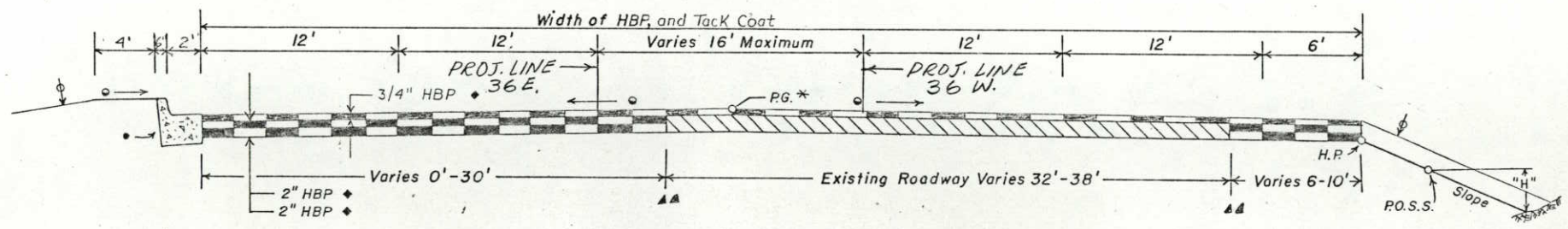

S.H. 36
Section C Sta. 1127+00 TO 1130+20
Sta. 1127+00 TO 1133+00 Tapers to Sect. B

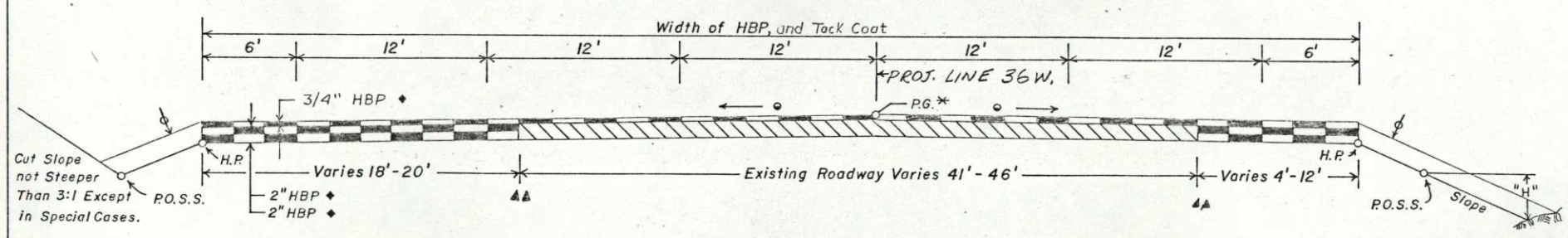

S.H. 7
Section D Sta. 2103+00-2105+45

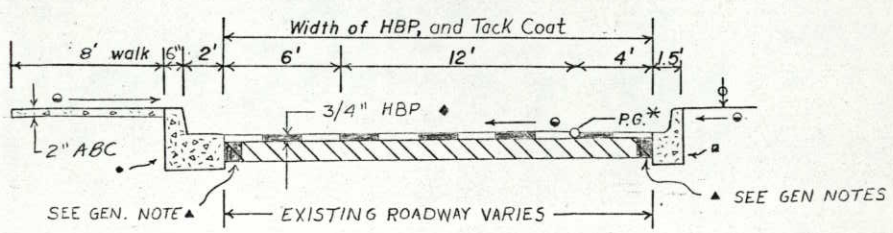

P.G. - PROFILE GRADE

H.P. - HINGE POINT

P.O.S.S. - POINT OF SLOPE SELECTION.

◆ APPROXIMATE THICKNESS

SLOPE 0.02 FT./FT. OR MATCH EXISTING SLOPE

CURB AND GUTTER (TYPE 2) (SECTION IB)

CURB AND GUTTER (TYPE 2) (SECTION IIB)

THE CONTRACTOR WILL BE REQUIRED TO PLACE TOPSOIL TO THIS LINE AFTER COMPLETION OF THE PAVING OPERATION. (R-1)

* LOCATION OF CROWN POINT VARIES. ELEVATION TO BE THICKNESS OF TOP LIFT ABOVE EXISTING PAVEMENT.

FILL SLOPES:
SLOPE 6:1 WHERE "H" IS LESS THAN 4'
SLOPE 4:1 WHERE "H" IS 4' TO 10'
SLOPE 3:1 WHERE "H" IS OVER 10'
IN SPECIAL CASES, SLOPE MAY BE STEEPENED.

COLORADO PROJECT NO. CXFC 06-0036-05

GENERAL NOTES

FOR PRELIMINARY PLAN QUANTITIES OF PAVEMENT MATERIALS, THE FOLLOWING RATES OF APPLICATION WERE USED:

TACK COAT DILUTED EMUL.
ASPHALT (SLOW SETTING) @0.1 GAL./SQ.YD. (DILUTED)
BITUMINOUS PAVEMENT (GR EX)
(HAUL AND ASPHALT) @110 LBS./SQ.YD./INCH

DILUTED EMULSIFIED ASPHALT FOR TACK COAT SHALL CONSIST OF 1 PART EMULSIFIED ASPHALT AND 1 PART WATER.

RATES OF APPLICATION SHALL BE AS DETERMINED BY THE ENGINEER AT THE TIME OF APPLICATION.

THE FOLLOWING SHALL BE FURNISHED WITH EACH BITUMINOUS PAVER.
1. A SKI TYPE DEVICE AT LEAST 30 FEET IN LENGTH.
2. SHORT SKI OR SHOE.

ANY LAYER OF BITUMINOUS PAVEMENT THAT IS TO HAVE A SUCCEEDING LAYER PLACED THEREON SHALL BE COMPLETED FULL WIDTH BEFORE SUCCEEDING LAYER IS PLACED.

ROAD APPROACHES WHICH REQUIRE BITUMINOUS PAVEMENT SHALL HAVE A 2" THICKNESS OF PAVEMENT PLACED AS FOLLOWS:

PUBLIC APPROACHES AND ENTRANCES TO BUILDINGS OR RESIDENCES SHALL BE PAVED 50 FEET OUT FROM EDGE OF SHOULDER OR TO THE RIGHT OF WAY LINE, WHICHEVER IS LESS. FIELD ENTRANCES SHALL BE PAVED 4 FEET OUT FROM EDGE OF SHOULDER.

DEPTH OF MOISTURE-DENSITY CONTROL FOR THIS PROJECT SHALL BE AS FOLLOWS:

FULL DEPTH OF ALL EMBANKMENTS.
BASES OF CUTS AND FILLS 6 INCHES

EXCAVATION REQUIRED FOR COMPACTION OF BASES OF CUTS AND FILLS WILL BE CONSIDERED AS SUBSIDIARY TO THAT OPERATION AND WILL NOT BE PAID FOR SEPARATELY.

TYPE OF COMPACTION FOR THIS PROJECT WILL BE AASHTO T-99.

THE MINIMUM THICKNESS OF TOPSOIL SHALL BE 4 INCHES ON ALL SLOPES AND WILL BE PLACED INSIDE THE ISLANDS. IT IS ESTIMATED THAT 932 CU. YDS. WILL BE REQUIRED BASED ON AVERAGE THICKNESS, AND WILL BE OBTAINED FROM CONTRACTOR SOURCE. (R-1)

THE GRASS AND SPRINKLERS LOCATED ON THE NORTH SIDE OF S.H. 36, WILL REQUIRE NEW SOD AND SPRINKLER SYSTEM MODIFICATIONS ON THE NEW SLOPE. TO BE DONE BY OTHERS AT NO COST TO THE PROJECT.

GUARD POSTS AND DELINEATORS WILL BE REMOVED AND REPLACED BY STATE FORCES AT NO COST TO THE PROJECT.

MILE POSTS WILL BE ADJUSTED OR RESET BY STATE FORCES AT NO COST TO PROJECT.

CONTRACTOR MUST CONTACT MR. RICHARD WIDMER DIRECTOR OF PUBLIC WORKS OF THE TOWN OF ESTES PARK 5 DAYS PRIOR TO BEGINNING CONSTRUCTION.

ADJUST CURB AND GUTTER FLOW LINE TO DRAIN DURING CONSTRUCTION. ALL GRADES SHALL BE APPROVED BY THE SURVEYOR.

▲ EXISTING PAVEMENT SHALL BE WHEEL CUT TO PROVIDE A NEAT JOINT ADJACENT TO NEW CONSTRUCTION. ASPHALT PATCHING WILL BE CONSIDERED INCIDENTAL AND INCLUDED IN THE COST OF THE CURB AND GUTTER.

▲▲ EXISTING PAVEMENT SHALL BE WHEEL CUT TO PROVIDE A NEAT JOINT ADJACENT TO NEW CONSTRUCTION. (R-1)

IT IS ESTIMATED THAT 80 GALLONS OF PAVEMENT MARKING PAINT WILL BE REQUIRED FOR THIS PROJECT AS FOLLOWS:
WHITE: 45 GALLONS
YELLOW: 35 GALLONS

MATERIAL SHALL BE PLACED IN SEPARATE COURSES AT THE FOLLOWING APPROXIMATE RATES PER 100 LIN. FT. OF ROADWAY.

		TONS			
		SECTION			
LAYER	THICKNESS	A	B	C	D
LIFT 3	3/4" HBP	35	28	28	11
LIFT 2	2" HBP	VARIES	VARIES	VARIES	VARIES
LIFT 1	2" HBP	VARIES	VARIES	VARIES	VARIES

THE RATES SHOWN HAVE BEEN DETERMINED FROM INFORMATON AVAILABLE AT THE TIME OF DESIGN. RATES SHOULD BE ADJUSTED DURING CONSTRUCTION TO OBTAIN THE DESIRED APPROXIMATE THICKNESS.

114450

TE OF COLORADO
TE DEPARTMENT OF HIGHWAYS
ISION OF HIGHWAYS:
O. H. FORM NO. 113:
. DEC. 1983:

SUMMARY OF APPROXIMATE QUANTITIES

AS CONSTRUCTED			FED. ROAD REGION	DIVISION	PROJ. NO.	SHEET NO.
NO REVISIONS	REVISED 5-20-89	VOID	VIII	COLO.	CXFC 06-0036-05	4

INDEX BOOK	PAGE	SHEET	CONTRACT ITEM NO.	CONTRACT ITEM	UNIT	PROJECT TOTALS PLAN	AS CONST.	DIFF. +/-	% PLAN
FORM 305's			202	REMOVAL OF STRUCTURE	EACH	1	1	—	100
			202	REMOVAL OF PIPE	EACH	1	1	—	100
			202	REMOVAL OF CURB AND GUTTER	LIN. FT.	1117	1117	—	100
			202	REMOVAL OF PAVEMENT MARKING	SQ. FT.	2698	1120	-1578	42
			202	REMOVAL OF GROUND SIGN	EACH	43	55	+12	128
			202	REMOVAL OF GUARD RAIL TYPE 3 DELETED BY FORM 105	LIN. FT.	54	0	-54	0
			203	UNCLASSIFIED EXCAVATION (COMPLETE IN PLACE)	CU. YD.	1592	1007	-585	63
			207	TOPSOIL (HAUL)	CU. YD.	932	1239	+307	133
			210	RESET GROUND SIGN	EACH	1	2	+1	200
			212	SEEDING (NATIVE)	ACRE	0.5	1.3	+.8	260
			213	MULCHING DELETED BY M.C.R. LINE 5 (CMO #1)	ACRE	0.5	0	-.5	0
			304	AGGREGATE BASE COURSE (CLASS 6) (HAUL) CMO #1 DELETED BY M.C.R. LINE 1	TON	70	0	-70	0
			403	HOT BITUMINOUS PAVEMENT (GRADING EX) (HAUL AND ASPHALT)	TON	2467	2838	+371	115
			411	EMULSIFIED ASPHALT (SLOW-SETTING)	GAL.	1444	873	-571	60
			604	INLET TYPE C (5 FOOT)	EACH	2	2	—	100
			608	CONCRETE CURB RAMP	SQ. YD.	4	17	+13	425
			609	CURB AND GUTTER TYPE 2 (SECTION I-B)	LIN. FT.	485	737	+252	152
			609	CURB AND GUTTER TYPE 2 (SECTION II-B)	LIN. FT.	2479	2069	-410	83

ATE OF COLORADO
ATE DEPARTMENT OF HIGHWAYS
VISION OF HIGHWAYS:
.O. H. FORM NO. 113:
V. DEC. 1983:

SUMMARY OF APPROXIMATE QUANTITIES

AS CONSTRUCTED			FED. ROAD REGION	DIVISION	PROJ. NO.	SHEET NO.
NO REVISIONS	REVISED 5-20-89	VOID	VIII	COLO.	CXFC 06-0036-05	5

INDEX BOOK	PAGE	SHEET	CONTRACT ITEM NO.	CONTRACT ITEM	UNIT	PROJECT TOTALS PLAN	AS CONST.	DIFF. +/-	% PLAN
FORM 305's			613	1-1/2 INCH ELECTRICAL CONDUIT	LIN.FT.	350	318	-32	91
			613	3 INCH ELECTRICAL CONDUIT	LIN.FT.	400	230	-170	58
			614	FLAGGING	HR.	750	410.5	-339.5	55
			614	TRAFFIC CONTROL SUPERVISOR	DAY	30	35	+5	117
			614	SIGN PANEL (CLASS I)	SQ.FT.	121	131	+10	108
			614	SIGN PANEL (CLASS II)	SQ.FT.	78	77	-1	99
			614	SIGN PANEL (CLASS III)	SQ.FT.	165	165	—	100
			614	TIMBER SIGN POST 4x4 INCH	LIN.FT.	275	355	+80	129
			614	TIMBER SIGN POST 6x6 INCH	LIN.FT.	327	302	-25	92
			614	LOOP DETECTOR WIRE	LIN.FT.	2750	2558	-192	93
			614	TRAFFIC SIGNAL FACE (12-8-8)(INSTALL ONLY)	EACH	4	4	—	100
			614	TRAFFIC SIGNAL FACE (12-12-12)(INSTALL ONLY)	EACH	6	6	—	100
			614	TRAFFIC SIGNAL FACE(12-12-12-12-12) (INSTALL ONLY)	EACH	1	1	—	100
			614	TRAFFIC SIGNAL CONTROLLER(INSTALL ONLY)	EACH	1	1	—	100
			614	PEDESTRIAN PUSH BUTTON (INSTALL ONLY)	EACH	4	4	—	100
			614	CONSTRUCTION TRAFFIC SIGN (PANEL SIZE A) DELETED BY FORM 105	EACH	2	0	-2	0
			614	CONSTRUCTION TRAFFIC SIGN (PANEL SIZE B)	EACH	18	14	-4	78
			614	DRUM CHANNELIZING DEVICE (WITH LIGHT) (STEADYBURN)	EACH	50	50	—	100
			614	TRAFFIC CONE	EACH	100	100	—	100

SUMMARY OF APPROXIMATE QUANTITIES

AS CONSTRUCTED			FED. ROAD REGION	DIVISION	PROJ. NO.	SHEET NO.
NO REVISIONS	REVISED 5-20-89	VOID	VIII	COLO.	CXFC 06-0036-05	6

INDEX BOOK	PAGE	SHEET	CONTRACT ITEM NO.	CONTRACT ITEM	UNIT	PROJECT TOTALS PLAN	AS CONST.	DIFF. +/-	% PLAN
FORM 305'S									
			614	TRAFFIC SIGNAL-LIGHT POLE (INSTALL ONLY)	EACH	2	2	—	100
			614	TRAFFIC SIGNAL POLE (INSTALL ONLY)	EACH	2	2	—	100
			620	FIELD LABORATORY (CLASS 2)	EACH	1	1	—	100
			620	SANITARY FACILITY	EACH	1	1	—	100
			624	18 INCH CULVERT PIPE (CR 3)	LIN.FT.	170	214	+44	126
			624	24 INCH CULVERT PIPE (CR 3)	LIN.FT.	10	10	—	100
			608	C & G TYPE 2 (SEC IB) PRICE REDUCTION	L.S.	0	1	+1	—
			625	CONSTRUCTION SURVEYING	L.S	1	1	—	100
			609	C & G TYPE 2 (SEC IIB) PRICE REDUCTION	L.S.	0	1	+1	—
			626	MOBILIZATION	L.S.	1	1	—	100
			608	CONCRETE SIDEWALK (CMO #1)	SQ YD	0	213	+213	—
			627	PAVEMENT MARKING PAINT	GAL.	80	62	-18	78
			213	MULCHING (HYDRO) (CMO #1)	ACRE	—	1.3	+1.3	—
			627	4 INCH PAVEMENT MARKING TAPE	LIN.FT.	2800	689	-2111	25
				FORCE ACCOUNT					
			F/A01	MINOR CONTRACT REVISIONS LINE 3 - RETAINING WALL (CMO #1) LINE 4 - MODIFY INLET (CMO #1)	F.A.	1	1	—	100
			F/A02	DBE INCENTIVE PAYMENT	F.A.	1	1	—	100
			F/A03	CONNECT POWER SOURCE	F.A.	1	1	—	100
			F/A04	PURCHASE SIGNALIZATION EQUIP. (BY CDOH)	F.A.	1	1	—	100

ATE OF COLORADO
ATE DEPARTMENT OF HIGHWAYS
VISION OF HIGHWAYS:
O. H. FORM NO. 126:
V. FEB. 1984

AS CONSTRUCTED					
NO REVISIONS	REVISED 5-20-89	VOID			

FED. ROAD REGION	DIVISION	PROJ. NO.	SHEET NO.	SHEET TOTALS
VIII	COLO.	CXFC 06-0036-05	7	

SEEDING PLAN

SEEDING, SOIL PREPARATION, FERTILIZING WITH COMMERCIAL FERTILIZER, AND MULCHING WILL BE REQUIRED FOR APPROXIMATELY 0.5 ACRES WILL BE REQUIRED. THE FOLLOWING TYPES AND RATES SHALL BE USED:

COMMON NAME	BOTANICAL NAME	RATE PLS/ACRE POUNDS
SHEEP FESCUE	FESTUCA OVINA	1.0
BLUE GRAMA	BOUTELOUCA GRACILIS	1.0
ALKALI SACATON	SPOROBOLUS AIROIDES	0.25
CORN POPPY	PAPAVER RHOEAS	0.25
COSMOS	COSMOS BIPINNATUS	0.50
TOTAL POUNDS/PLS/ACRE SEEDING		3.00

MIX GRASS, CORN POPPY AND COSMOS AND SEED ENTIRE MEDIAN AREAS EVENLY.

WILDFLOWER SEED APPLICATION

COMMON NAME	BOTANICAL NAME	RATE PLS/ACRE POUNDS
ROCKY MTN. PENSTEMON	PENSTEMON STRICTUS	0.50
PRAIRIE CONEFLOWER	RATIBIDA COLUMNIFERA	0.25
SWEET WILLIAM	DIANTHUS BARBATUS	0.25
BLUE FLAX	LINUM LEWISII	0.50
TOTAL POUNDS/PLS/ACRE SEEDING		1.50

DO NOT MIX THESE SEEDS, BUT APPLY IN INDIVIDUAL SWATHES BY HAND AS FOLLOWS:

SWEET WILLIAM CLOSEST TO CURBING
BLUE FLAX NEXT
PRAIRIE CONEFLOWER NEXT TO BLUE FLAX
PENSTEMON IN THE CENTER OF MEDIAN

RAKE ENTIRE MEDIAN, BURYING THE SEED TO A DEPTH OF .25" TO .50"

MULCHING MATERIAL		
	STRAW	1.5 TONS PER ACRE

HAND PLACE 1½ TONS/ACRE STRAW AND CRIMP WITH A SHOVEL

COMMERCIAL FERTILIZER	RATE LBS/ACRE AVAILABLE
AVAILABLE N	10
AVAILABLE P	10
AVAILABLE K	10

THIS SEEDING PLAN IS TO BE USED FOR THE ISLANDS.

PROJECT TOTALS

SEEDING	(4.75 LBS/ACRE)	2.5 LBS
MULCHING	(1.50 TONS/ACRE)	0.75 TONS

TOTALS (FOR INFORMATION ONLY)

FERTILIZER	(AVAILABLE N)	5.0 LBS
FERTILIZER	(AVAILABLE P)	5.0 LBS
FERTILIZER	(AVAILABLE K)	5.0 LBS

REMOVAL OF GUARD RAIL

LOCATION	SIDE	GUARDRAIL TYPE 3 LIN. FT.
SH 36 1127+77 TO 1128+31	L	54
TOTAL		540

SUMMARY OF EARTHWORK QUANTITIES

INDEX BOOK	PAGE	SHEET	DESCRIPTION	PROJECT TOTALS PLAN	FINAL
			UNCLASSIFIED EXCAVATION *		
			ROADWAY (FROM CROSS SECTIONS)	1592	
			TOTAL	1592	
			TOPSOIL		
			TOPSOIL (HAUL)	932	
				~~832~~ 1239	1239
			FOR INFORMATION ONLY		
			EMBANKMENT MATERIAL (CIP) **		
			ROADWAY (FROM CROSS SECTIONS)	841	
			TOTAL	841	
			ROADWAY QUANTITIES BALANCE		
			EXCAVATION UNCLASSIFIED	1592	
			TOTAL	~~1592~~ 1007	1007
			EMBANKMENT (NET) ROADWAY (FROM CROSS SECTIONS)	841	
			TOTAL	841	
			EMBANKMENT X FACTOR (1.20)		
			ROADWAY (FROM CROSS SECTIONS)	1010	
			EXCESS EXCAVATION	582	
			TOTAL	~~1592~~ 1007	1007

* REMOVAL OF ASPHALT MAT INCLUDED IN COST OF UNCLASSIFIED EXCAVATION
** COMPACTION AASHTO T99

TABULATION OF CURB AND GUTTER

LOCATION	REMOVAL OF C&G SIDE	LIN. FT.	C&G TYPE 2 (SECT IB) SIDE	LIN. FT.	C&G TYPE 2 (SECT IIB) SIDE	LIN. FT.
SH 36 **						
1119+50 TO 1130+00					RT.	~~1060~~ 1054
1123+37 TO 1125+10					LT.	~~170~~ 167
1123+45 TO 1126+29	LT.	280				
1125+50 TO 1127+16					LT.	~~165~~
1126+20 TO 1126+40	LT.	82				
SH 7						
2099+15 TO 2100+90					LT.	~~180~~ 229
2101+40 TO 2108+30 *					LT.	~~529~~
2101+57 TO 2103+60					RT.	~~240~~
2101+83 TO 2104+77	RT.	305				
2103+07 TO 2105+45			LT.	~~240~~ 231		
2104+40 TO 2105+55	LT.	117				
WEST ISLAND RAMP (FROM SH 7)				506		
2101+55 TO 2102+88			RT.	~~245~~		
2101+88 TO 2102+76	RT.	265				
2103+00 TO 2104+05					LT.	~~135~~
2104+40 TO 2104+93	LT.	68				
SUBTOTAL		1117		~~737~~ 485		~~2479~~ 2068
TOTAL		1117		~~737~~ 485		~~2479~~ 2068

* BASED ON PROJ 36W ALIGNMENT
** S.H. 36 ALIGNMENT

SURFACING PLAN

SOURCE	LOCATION	TYPICAL SECTION	LENGTH (STA.)	QUANTITY-TONS HBP (GR EX) HFA LIFT 3	LIFT 2	LIFT 1
CONTRACTOR SOURCE	109+00					
		APPROACH	2.00	37	12	12
	111+00					
		A	6.50	179	53	53
	117+50					
		A	2.50	75	52	52
	1120+00					
		A	1.20	36	9	9
	1121+20					
		A	2.10	66	9	9
	1123+30					
		B	3.70	112	142	142
	1127+00					
		C	3.20	106	72	72
	1130+20					
		C TO B	2.80	81	54	54
	1133+00					
		B	5.00	97	49	49
	1138+00					
	S.H. 7					
	2099+00					
		APPROACH	4.00	117		
	2103+00					
		D	2.00	21		
	2105+00					
	RAMP TO EAST S.H. 36		3.00	42	39	39
	RAMP TO WEST S.H. 36		1.15	41	38	38
	EST. FOR ROAD APPR. *					98
	EST. FOR IRREGULARITIES			147		185
	SIDEWALK		7.70			76
SUBTOTAL				1127	529	888
TOTAL					~~2511~~ 2838	

STABILIZATION BASED ON:

1. 18K ESAL SH. 36 (INT. SH 7 WEST)	651,000
18K ESAL SH 36 (INT. SH 7 EAST)	342,000
18K ESAL SH 7	640,000
2. REGIONAL FACTOR	0.50
3. SERVICEABILITY INDEX	2.50
4. SUBGRADE "R" VALUE	40.00
STRENGTH COEFFICIENTS:	
5. HBP GR. EX	0.44

* ESTIMATED FOR:
6 CITY ROAD APPR.
3 PRIVATE APPR.

ATE OF COLORADO
ATE DEPARTMENT OF HIGHWAYS
VISION OF HIGHWAYS:
O. H. FORM NO. 826:
C. 1983:

AS CONSTRUCTED			FED. ROAD REGION	DIVISION	PROJ. NO.	SHEET NO.	TOTAL SHEETS
NO REVISIONS	REVISED 5-20-89	VOID	VIII	COLO.	CXFC 06-0036-05	8	

TABULATION OF SIGNING QUANTITIES

ITEM NO.	ITEM	UNIT	PROJECT TOTALS
202	REM GROUND SIGN	EACH	55 ~~43~~
210	RES GROUND SIGN	EACH	2 ~~1~~
614	SIGN PANEL (CL. I)	SQ. FT.	131 ~~121~~
614	SIGN PANEL (CL. II)	SQ. FT.	77 ~~78~~
614	SIGN PANEL (CL. III)	SQ. FT.	165
614	TIMBER SIGN POST (4x4)	LIN. FT.	355 ~~275~~
614	TIMBER SIGN POST (6x6)	LIN. FT.	302 ~~327~~
614	CONST TRAF SIGN (A)	EACH	0 ~~2~~
614	CONST TRAF SIGN (B)	EACH	14 ~~18~~
614	DRUM DEVICE (LIGHT) (SB)	EACH	50
614	TRAFFIC CONE	EACH	100
627	4 IN PVMT MKG TAPE	LIN. FT.	689 ~~2,800~~

SCHEDULE OF CONSTRUCTION TRAFFIC SIGNS

SIGNS						OTHER DEVICES	
SIGN CODE	LEGEND	DIMENSIONS	PANEL SIZE A	PANEL SIZE B	PANEL SIZE C	ITEM	QUANTITY
48W20-1	ROAD/CONST./AHEAD	48"x 48"		3		TRAFFIC CONES 28"	100
48W20-4	ONE LANE / ROAD/AHEAD	48"x 48"		~~3~~ 2		DRUM DEVICE (LIGHT) (SB)	50
48W20-7a	Flagger Symbol	48"x 48"		~~3~~ 4		PVMT MKG TAPE	689 ~~2,800~~
60G20-2	END / CONST.	60"x 24"		3			
48W20-5( )	* LANE / CLOSED/AHEAD	48"x 48"		2			
48W4-2(R)	Right Lane Transition Symbol	48"x48"		~~2~~ 0			
48W4-2(R)	Left Lane Transition Symbol	48"x48"		~~2~~ 0			
BARRICADE (TYPE 2)			0 ~~2~~				
SIGN TOTALS			0 ~~2~~	14 ~~18~~	–		

* - Interchangeable plaque reading "RIGHT" / "LEFT" shall be provided at no extra cost.

TE OF COLORADO
TE DEPARTMENT OF HIGHWAYS:
VISION OF HIGHWAYS:
O.H. FORM 822:
V. NOV. 1983:

AS CONSTRUCTED			FED. ROAD REGION	DIVISION	PROJ. NO.	SHEET NO.
NO REVISIONS	REVISED 5-20-87	VOID	VIII	COLO.	CXFC 06-0036-05	9

(R-1) 2-7-89, REVISED NOTE, G.R.R.

TABULATION OF SIGNS

SIGN NO.	SIGN CODE	STATION	SIGN PANEL SIZE	BACK-GROUND COLOR	REMOVE GROUND SIGN (EACH)	RESET GROUND SIGN (EACH)	NO. OF POSTS	LENGTH OF POST	POST TYPE (LIN. FT.) 4 x 4 TIMBER	6 x 6 TIMBER	W6x12 BEAM	W6x15 BEAM	W8x18 BEAM	W8x21 BEAM	W10x22 BEAM	W10x26 BEAM	W12x35 BEAM	W12x40 BEAM	U-2	CONC. FOOTING TYPE (EACH) 1	2	3	4	5	6	7	8	SIGN PANEL (SQ. FT.) CLASS I	CLASS II	CLASS III
1	SPECIAL	1128+50 SH36	2'x 2'-6"	GREEN	1		2	14'-0"		28.0																				20.00
2	24R2-1 (30)	1127+30 SH36	24"x 30"	WHITE	1		1	12'-6"	12.5																			5.00		
3		1126+30 SH36			1																									
4		1126+40 SH36			1																									
5		1125+90 SH36			1																									
6A	24M4-5		24"x 12"	WHITE																									2.00	
6B	24M1-4(34)		24"x 24"	WHITE																									4.00	
6C	21M6-1	1125+15 SH36	21"x 15"	WHITE			1	16'-0"		16.0																			2.19	
6D	24M1-4(36)		24"x 24"	WHITE																									4.00	
6E	21M6-4		21"x 15"	WHITE																									2.19	
7A	24M1-6A(7)		24"x 24"	WHITE																									4.00	
7B	21M6-1	1125+00 SH36	21"x 15"	WHITE			1	15'-0"		15.0																			2.19	
7C	24M1-4(36)		24"x 24"	WHITE																									4.00	
7D	21M6-3		21"x 15"	WHITE																									2.19	
8		1123+70 SH36			1																									
9		1123+20 SH36			1																									
10		1122+60 SH36			1																									
11	SPECIAL	1122+00 SH36	8'x 4'	GREEN	1		2	17'-0"		34.0																				32.00
12		1120+80 SH36				1																								
13	30R1-1	1128+70 SH36	30" Octagon	RED	1		1	14'-0"	14.0																			6.25		
14A	24M1-4(36)		24"x 24"	WHITE						15.0																			4.00	
14B	21M6-3		21"x 15"	WHITE																									2.19	
14C	24M1-6A(7)	1127+90 SH36	24"x 24"	WHITE	1		1	15'-0"		15.0																			4.00	
14D	21M6-2(R)		21"x 15"	WHITE																									2.19	
15		1126+50 SH36			1																									
16		2104+65 SH7			1																									
17		2104+35 SH7			1																									
18		2103+65 SH7			1																									
19	30R5-1	2103+05 SH7	30"x30"	WHITE	1		1	12'-6"	12.5																			6.25		
20		2102+20 SH7			1																									
21		2102+25 SH7			1																									
22		2102+10 SH7			1																									
23A	24M3-3	2101+90 SH7	24"x12"	WHITE			1	13'-0"	13.0																			2.00		
23B	24M1-6A(7)		24"x24"	WHITE																								4.00		
24	30R1-1	2100+85 SH7	30" Octagon	RED	1		1	12'-0"	12.0																			6.25		
25	SPECIAL	2100+55 SH7	8'x 3'	GREEN			2	16'-0"		32																				24.00
26		2100+20 SH7			1																									
27	30R1-1	2090+90 SH7	30" Octagon	RED	1		1	12'-0"	12.0																			6.25		
28	SPECIAL	2100+20 SH7	7'x 4'	GREEN	1		2	17'-0"		34																				28.00
29		2101+10 SH7			1																									
30A	24M3-4		24"x12"	WHITE																									2.00	
30B	24M1-4(36)		24"x24"	WHITE																									4.00	
30C	21M5-1(L)	2101+60 SH7	21"x15"	WHITE	1		1	16'-0"		16																			2.19	
30D	24M3-2		24"x12"	WHITE																									2.00	
30E	24M1-4(36)		24"x24"	WHITE																									4.00	
30F	21M6-2(R)		21"x15"	WHITE																									2.19	
31	36W3-3	2102+20 SH7	36" DIAMOND	YELLOW			1	15'-0"		15.0																			9.00	
32		1123+85 SH36			1																									
33		1122+95 SH36			1																									
34	36R1-2	1122+85 SH36	36" Triangle	WHITE	1		1	12'-6"	12.5																				3.90	

NOTES:

1. POST LENGTHS ARE APPROXIMATE ONLY. EXACT LENGTHS TO BE DETERMINED BY THE CONTRACTOR. (R-1)

▲ 2. REFLECTIVE SHEETING SHALL BE HIGH BRIGHTNESS ENCAPSULATED TYPE. SEE SECTION 713 OF THE STANDARD SPECIFICATIONS.

11/11/87 07:41:12 IGS3:::(FORMS) F822 XXXXX HYYY

STATE OF COLORADO
STATE DEPARTMENT OF HIGHWAYS:
DIVISION OF HIGHWAYS:
D.O.H. FORM 822:
REV. NOV. 1983:

AS CONSTRUCTED			FED. ROAD REGION	DIVISION	PROJ. NO.	SHEET NO.
NO REVISIONS	REVISED 5-20-87	VOID	VIII	COLO.	CXFC 06-0036-05	10

TABULATION OF SIGNS

(R-1) 2-7-89, REVISED NOTE, G.R.R.

SIGN NO.	SIGN CODE	STATION	SIGN PANEL SIZE	BACK-GROUND COLOR	REMOVE GROUND SIGN (EACH)	RESET GROUND SIGN (EACH)	NO. OF POSTS	LENGTH OF POST	POST TYPE (LIN. FT.) 4 x 4 TIMBER	6 x 6 TIMBER	W6x12 BEAM	W6x15 BEAM	W8x18 BEAM	W8x21 BEAM	W10x22 BEAM	W10x26 BEAM	W12x35 BEAM	W12x40 BEAM	U-2	CONC. FOOTING TYPE (EACH) 1	2	3	4	5	6	7	8	SIGN PANEL (SQ. FT.) CLASS I	CLASS II	CLASS III
35	30R5-1	1122+75 SH36	30"x30"	WHITE			1	12'-6"	12.5																			6.25		
36A	24M3-2	1122+00 SH36	24"x12"	WHITE			1	13'-0"	13.0																			2.00		
36B	24M1-9(36)		24"x24"	WHITE																								4.00		
37	30R1-1	1121+10 SH36	30"Octagon	RED	1		1	12'-0"	12.0																			6.25		
38	24R2-1(40)	1120+80 SH36	24"x30"	WHITE	1		1	12'-6"	12.5																			5.00		
39A	21M2-1	1132+45 SH36	21"x15"	WHITE	1		1	13'-0"	13.0																			2.19		
39B	24M1-6A(7)		24"x24"	WHITE																								4.00		
40	SPECIAL	1130+50 SH36	8'x2'	GREEN	1		2	15'-0"		30.0																				16.00
41	SPECIAL	1119+85 SH36	5'x2'	GREEN	1		1	15'-0"		15.0																				10.00
42	30R1-1	1119+60 SH36	30"Octagon	RED	1		1	12'-0"	12.0																			6.25		
43A	21M2-1	1118+00 SH36	21"x15"	WHITE	1		1	13'-0"	13.0																			2.19		
43B	24M1-6A(7)		24"x24"	WHITE																								4.00		
44		1117+60 SH36			1																									
45	24R2-1(30)	1115+50 SH36	24"x30"	WHITE	1		1	14'-0"	14.0																			5.00		
46		1114+50 SH36			1																									
47	30R1-1	1114+05 SH36	30"Octagon	RED	1		1	14'-0"	14.0																			6.25		
48	SPECIAL	1112+90 SH36	7'x2'6"	GREEN	1		2	15'-6"		31.0																				17.50
49	30R1-1	1111+55 SH36	30"Octagon	RED	1		1	14'-0"	14.0																			6.25		
50	30R1-1	1114+95 SH36	30"Octagon	RED	1		1	14'-0"	14.0																			6.25		
51	30R3-7(R)	1114+15 SH36	30"x30"	WHITE	1		1	14'-0"	14.0																			6.25		
52	SPECIAL	1113+30 SH36	7'x2'6"	GREEN	1		2	15'-6"		31.0																				17.50
53	30R3-7(R)	1112+10 SH36	30"x30"	WHITE	1		1	14'-0"	14.0																			6.25		
54	30R1-1	1110+70 SH36	30"Octagon	RED	1		1	14'-0"	14.0																			6.25		
55	SPECIAL	1125+10 SH36	36"x36"	WHITE			MOUNT ON TRAFFIC SIGNAL MAST ARM																						9.00	
	NO PARKING		12"x18"	WHITE	7		7	@ 12'-6"	87.5																			10.5		
	HOSPITAL			BLUE	1																									
	FOOD & LODGING			WHITE	1																									
		PROJECT TOTALS			~~43~~ 55	+2			~~355.0~~ ~~274.5~~	~~302.0~~ ~~327.0~~																		131	77	165.00

NOTES:

1. POST LENGTHS ARE APPROXIMATE ONLY. EXACT LENGTHS TO BE DETERMINED BY THE CONTRACTOR. (R-1)
2. ▲ REFLECTIVE SHEETING SHALL BE HIGH BRIGHTNESS ENCAPSULATED TYPE. SEE SECTION 713 OF THE STANDARD SPECIFICATIONS.

11/11/87 07:41:12 IGS3:::(FORMS) F822 XXXXX HYYY

STATE OF COLORADO
STATE DEPARTMENT OF HIGHWAYS
DIVISION OF HIGHWAYS:
D. O. H. FORM NO. 126:
REV. FEB. 1984

TRAFFIC SIGNAL PLAN
S.H. 7 & S.H. 36
-Estes Park-

AS CONSTRUCTED						
NO REVISIONS ~~5-20-84~~	REVISED		VOID ~~5-20-84~~	FED.ROAD REGION	DIVISION	PROJ. NO.	SHEET NO.	SHEET TOTALS
				VIII	COLO.	CXFC 06-0036-05	11	

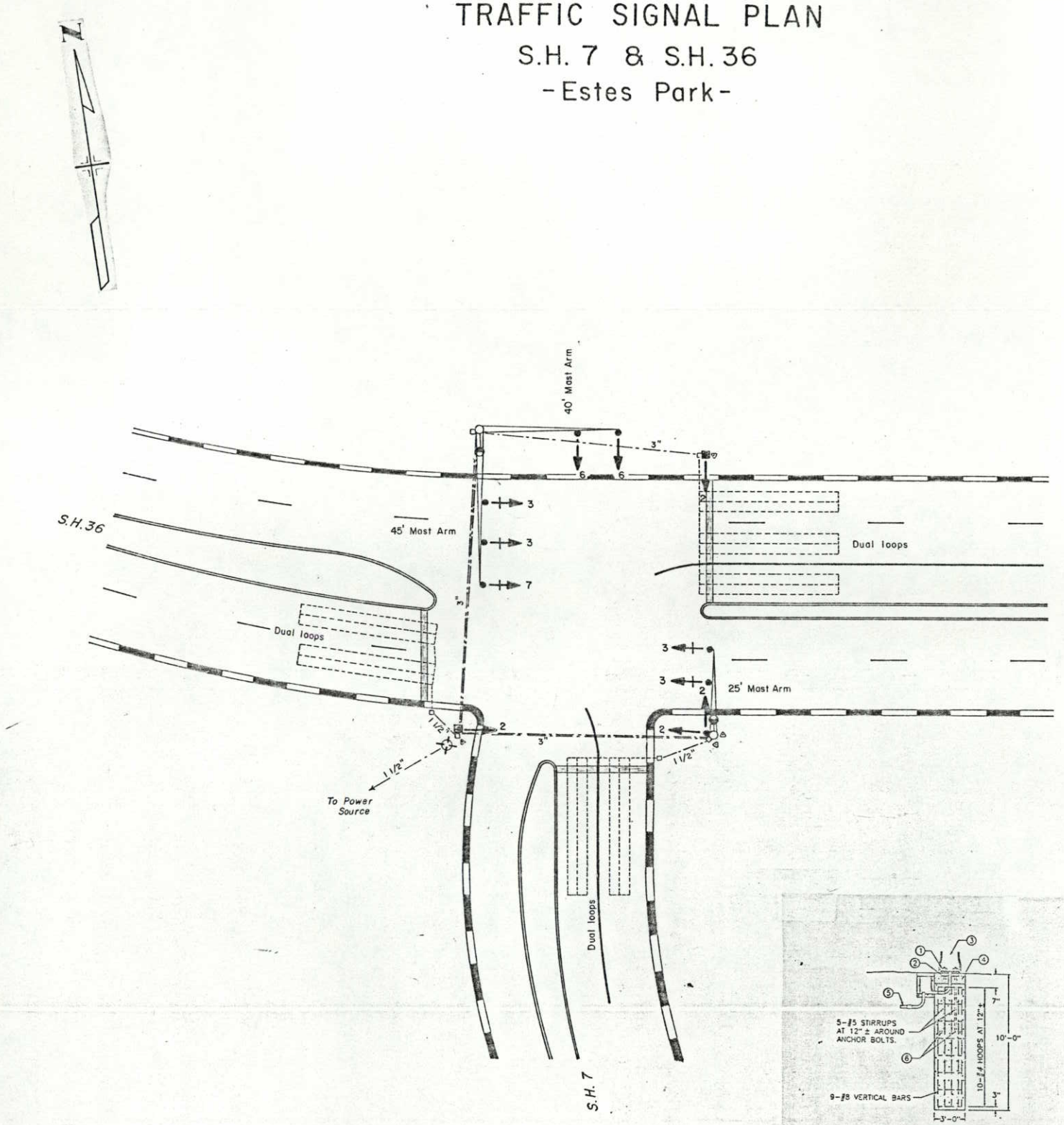

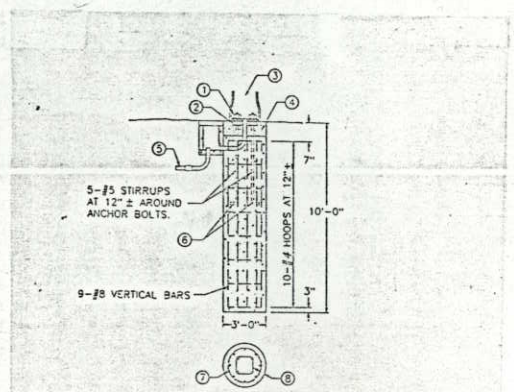

TYPICAL TRAFFIC SIGNAL POLE FOOTING DETAIL

NOTE: THIS DETAIL SHALL BE USED FOR TRAFFIC SIGNAL POLE FOOTINGS IN LIEU OF DETAILS B AND C ON STANDARD S-614-10. REFER TO STANDARD S-614-40 FOR FOOTING NOTES.

PHASING

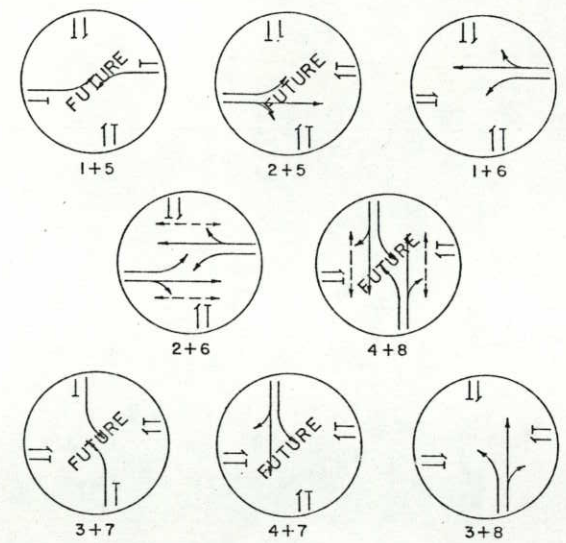

NOTES

1. Traffic signals mounted on mast arms shall be furnished with astro type mounting brackets (supplied by State).
2. Controller shall be a Type 170. Controller cabinet shall be a Model 332 (supplied by State)
3. Luminaires shall be 47,000 Lumen, 400 Watt HPS with cut-off lenses. (Supplied and installed by the town)
4. Conduit shall be Schedule 80 PVC.
5. Detector loops shall be installed prior to final lift.
6. Each signal pole shall have a pull box at the foundation of the pole (see typical footing detail). Conduit from pull box to pole base shall be 2".

FACES

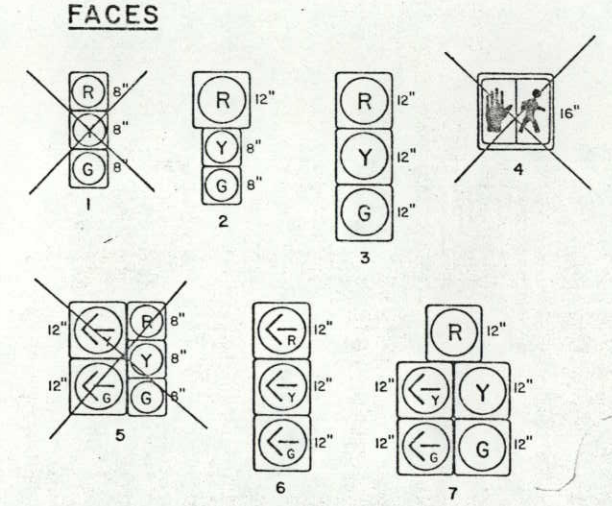

TABULATION OF QUANTITIES

ITEM NO.	ITEM DESCRIPTION	UNIT	QUANTITY	
613	1-1/2 IN ELEC COND	LIN. FT.	~~350~~	318
613	3 IN ELEC COND	LIN. FT.	~~400~~	230
614	PEDESTRIAN PUSH BUTTON (INSTALL ONLY)	EACH	4	
614	TRAF SIG (12-8-8) (INSTALL ONLY)	EACH	4	
614	TRAF SIG (12-12-12) (INSTALL ONLY)	EACH	6	
614	TRAF SIG (12-12-12-12-12) (INSTALL ONLY)	EACH	1	
614	LOOP DETECTOR WIRE	LIN. FT.	~~2750~~	2558
614	SIG-LIGHT POLE S (1) (INSTALL ONLY)	EACH	1	
614	SIG-LIGHT POLE S (2) (INSTALL ONLY)	EACH	1	
614	TRAF SIG PEDESTAL POLE S (INSTALL ONLY)	EACH	2	
614	CONTROLLER (TYPE 170) (INSTALL ONLY)	EACH	1	

LEGEND

	New	Existing
Traffic Signal Pole with Mast Arm		
Traffic Signal Span Wire Pole		
Pedestal Pole		
Traffic Signal Face		
Traffic Signal Face with Backplate		
Pedestrian Signal Face		
Controller and Cabinet		
Electrical Conduit and Pull Box		
Pull Box-Special		
Vehicle Loop Detector		
Pedestrian Push Button		
Luminaire		

Scale in Feet
0 20 40 60

4007000.00

ATE OF COLORADO
ATE DEPARTMENT OF HIGHWAYS
VISION OF HIGHWAYS:
O. H. FORM NO. 126:
V. FEB. 1984

AS CONSTRUCTED			
NO REVISIONS	5-20-89	REVISED	VOID

FED. ROAD REGION	DIVISION	PROJ. NO.	SHEET NO.	SHEET TOTALS
VIII	COLO.	CXFC 06-0036-05	12	

Estes Park
S.H. 36 & S.H. 7
Roadway Plan Sheet

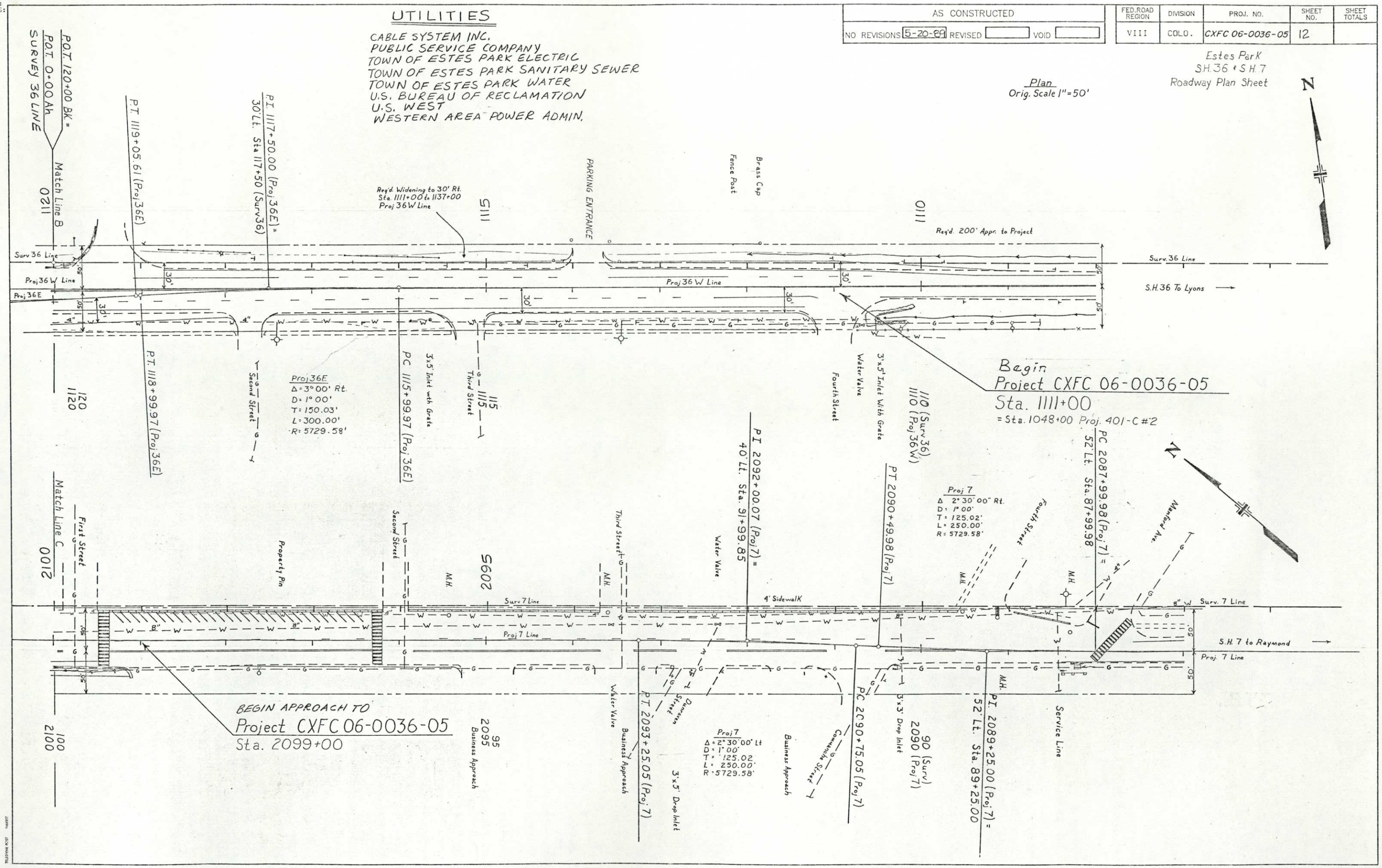

ATE OF COLORADO
ATE DEPARTMENT OF HIGHWAYS
VISION OF HIGHWAYS
O. H. FORM NO. 1126
V. FEB. 1984

AS CONSTRUCTED	FED. ROAD REGION	DIVISION	PROJ. NO.	SHEET NO.	SHEET TOTALS
NO REVISIONS ☐ REVISED 5-20-89 VOID ☐	VIII	COLO.	CXFC 06-0036 05	13	

(R-1) 2-7-89 ADDED DETAIL AND REVISED NOTES FOR MEDIAN INLETS, G.R.R.

Plan
Orig Scale 1" = 50'

Estes Park
S.H. 36 & S.H. 7
Roadway Plan Sheet

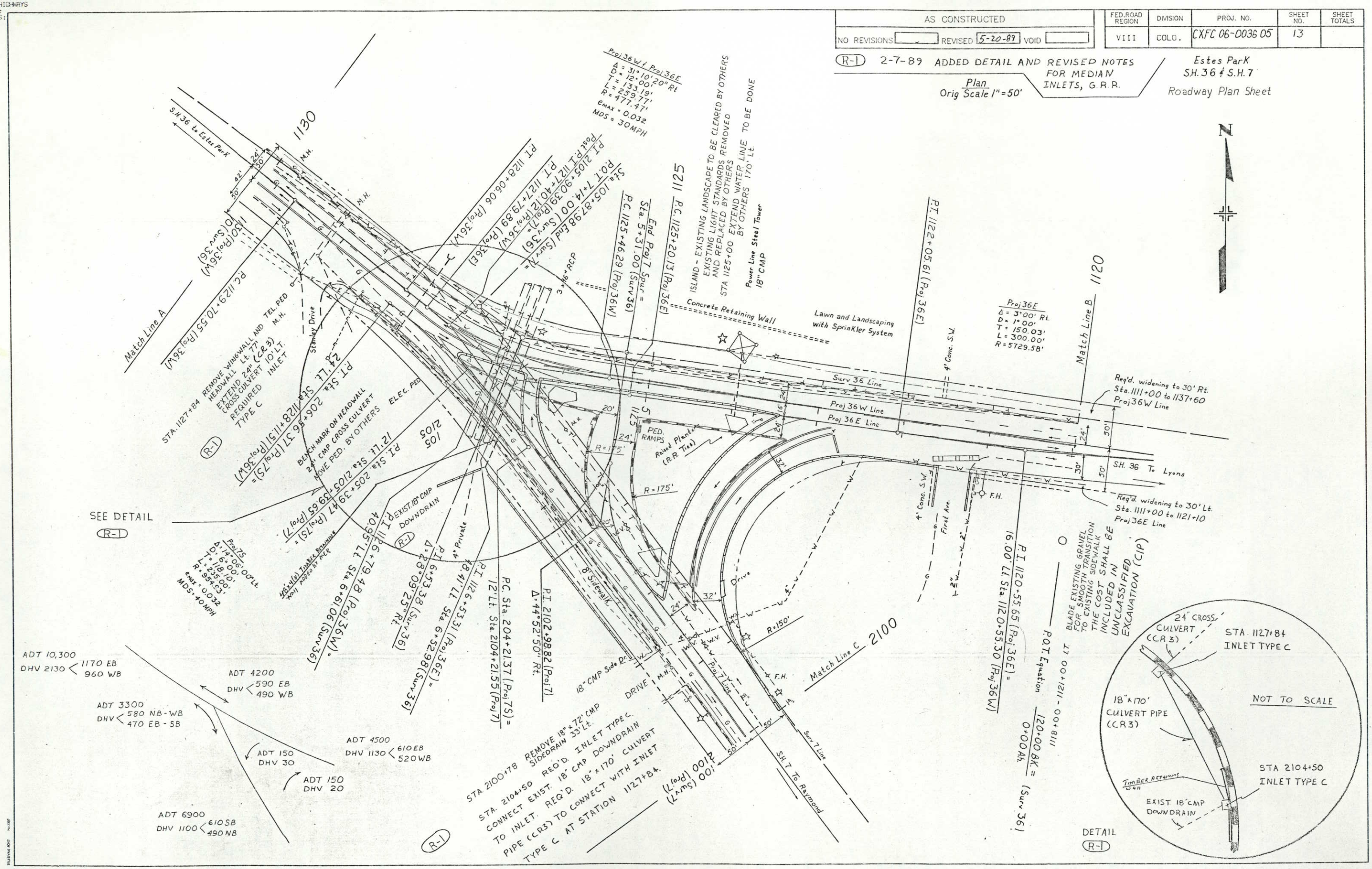

ATE OF COLORADO
ATE DEPARTMENT OF HIGHWAYS
VISION OF HIGHWAYS:
O. H. FORM NO. 126:
V. FEB. 1984

AS CONSTRUCTED			
NO REVISIONS 5-20-89	REVISED		VOID

FED. ROAD REGION	DIVISION	PROJ. NO.	SHEET NO.	SHEET TOTALS
VIII	COLO.	CXFC 06-0036-05	14	

Estes Park

SH 36 & SH 7

Roadway Plan Sheet

Plan
Orig Scale 1" = 50'

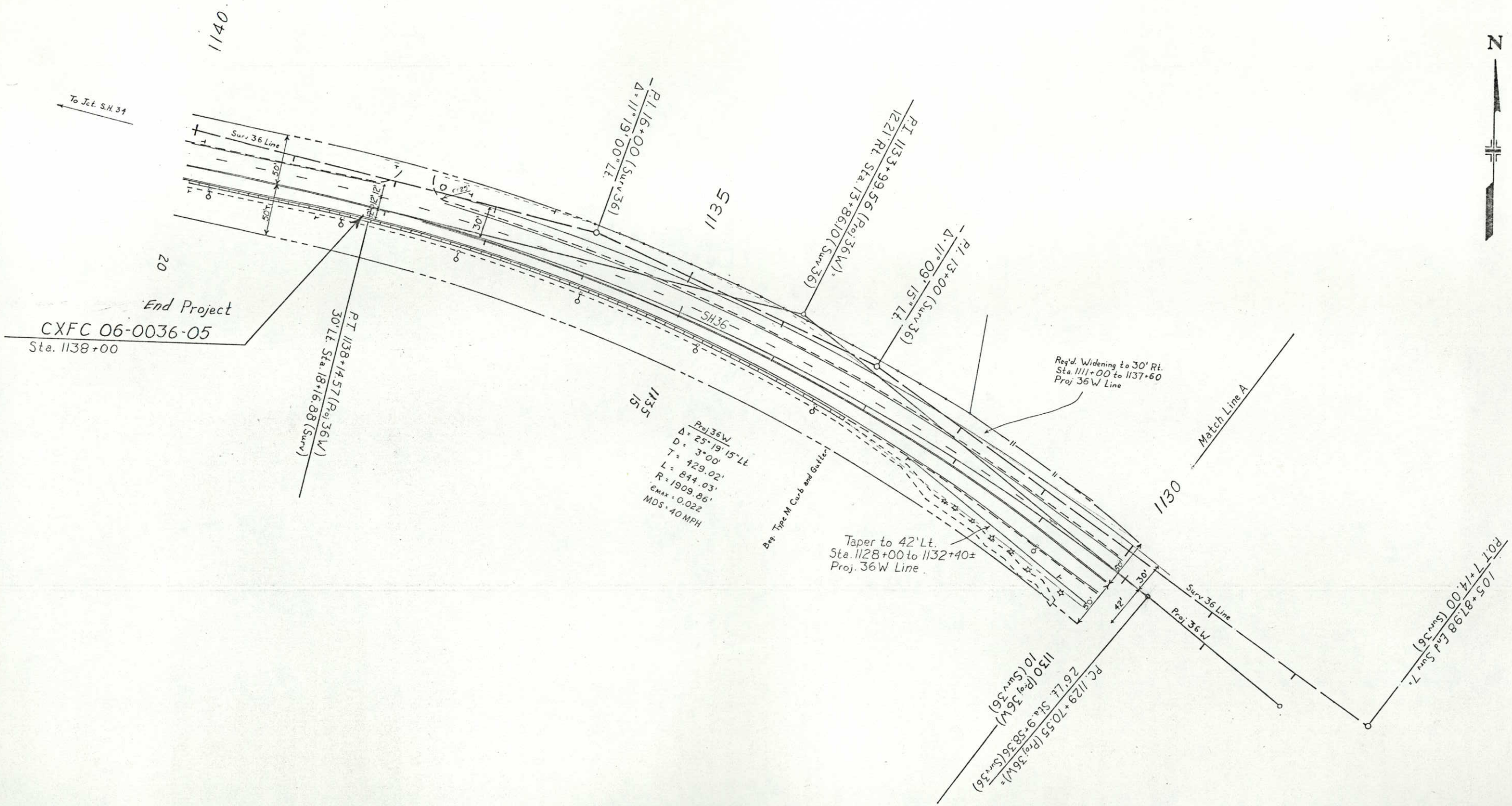

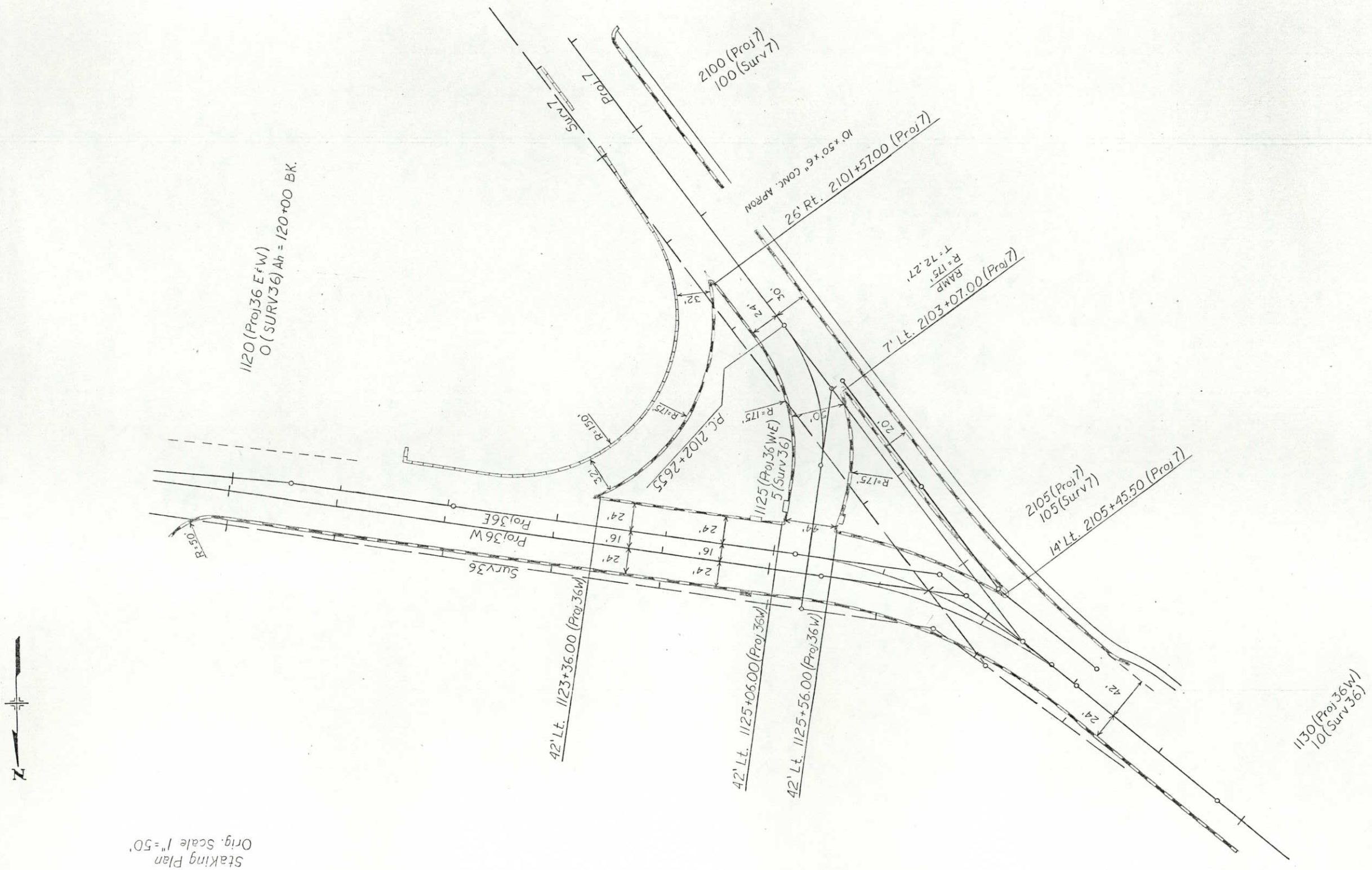

Staking Plan
Orig. Scale 1"=50'

FED. ROAD REGION	DIVISION	PROJ. NO.	SHEET NO.	SHEET TOTALS
VIII	COLO.	CXFC 06-0036-05	15	

AS CONSTRUCTED

NO REVISIONS 5-20-84 REVISED VOID

STATE OF COLORADO
STATE DEPARTMENT OF HIGHWAYS
DIVISION OF HIGHWAYS
O. H. FORM NO. 126.
REV. FEB. 1984

ATE OF COLORADO
ATE DEPARTMENT OF HIGHWAYS
VISION OF HIGHWAYS:
O. H. FORM NO. 126:
V. FEB. 1984

AS CONSTRUCTED	FED. ROAD REGION	DIVISION	PROJ. NO.	SHEET NO.	SHEET TOTALS
NO REVISIONS 5-20-89 REVISED VOID	VIII	COLO.	CXFC 06-0036-05	16	

Striping Plan

Orig. Scale 1"=50'

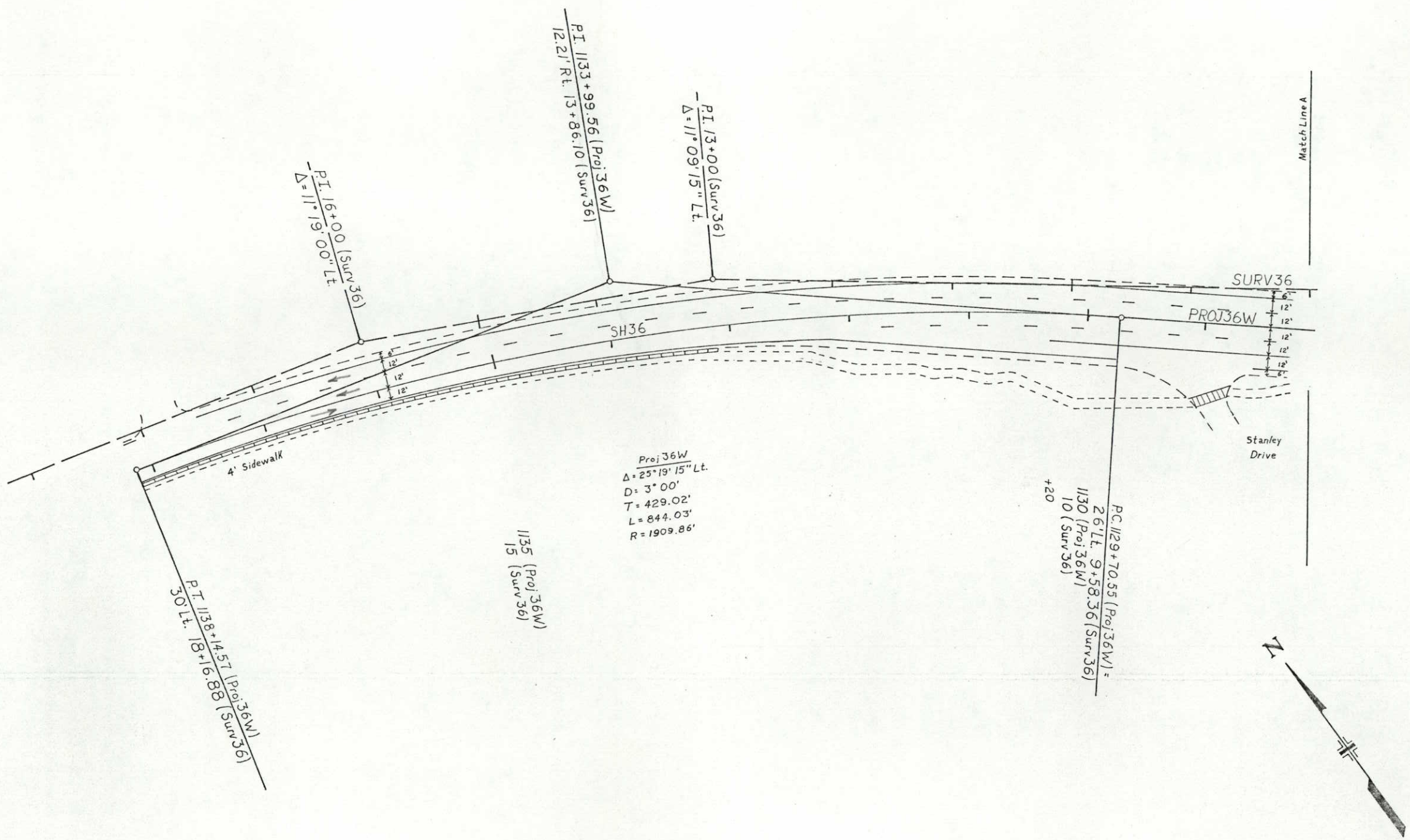

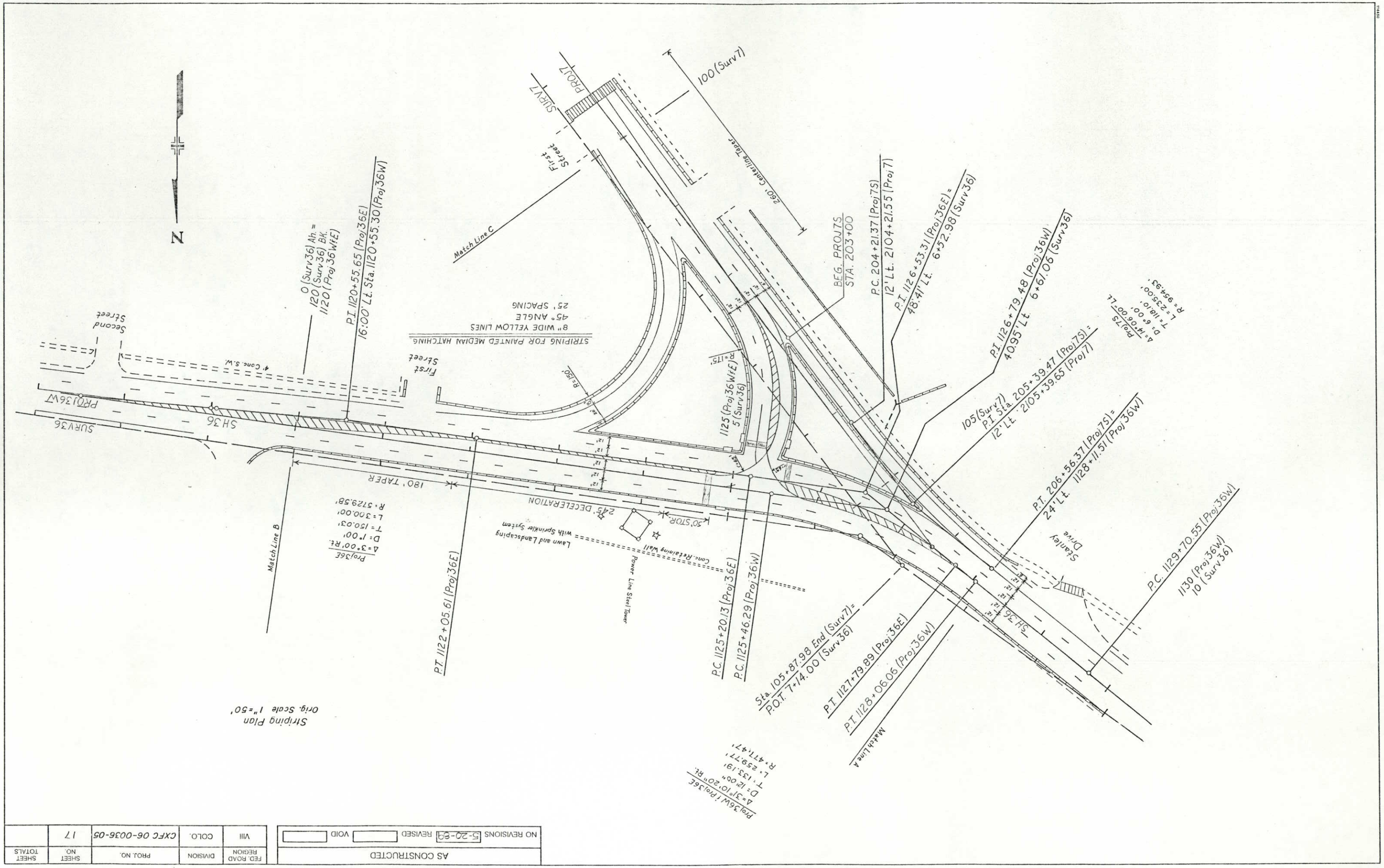

AS CONSTRUCTED					
NO REVISIONS 5-20-94 REVISED ☐ VOID ☐	FED. ROAD REGION	DIVISION	PROJ. NO.	SHEET NO.	SHEET TOTALS
	VIII	COLO.	CXFC 06-0036-05	17	

STATE OF COLORADO
STATE DEPARTMENT OF HIGHWAYS
DIVISION OF HIGHWAYS
D.H. FORM NO. 126
7 FEB. 1984

STATE OF COLORADO
STATE DEPARTMENT OF HIGHWAYS
DIVISION OF HIGHWAYS
D. O. H. FORM NO. 126
REV. FEB. 1984

AS CONSTRUCTED						
NO REVISIONS 5-20-88	REVISED		VOID			
FED. ROAD REGION	DIVISION	PROJ. NO.	SHEET NO.	SHEET TOTALS		
VIII	COLO.	CXFC 06-0036-05	18			

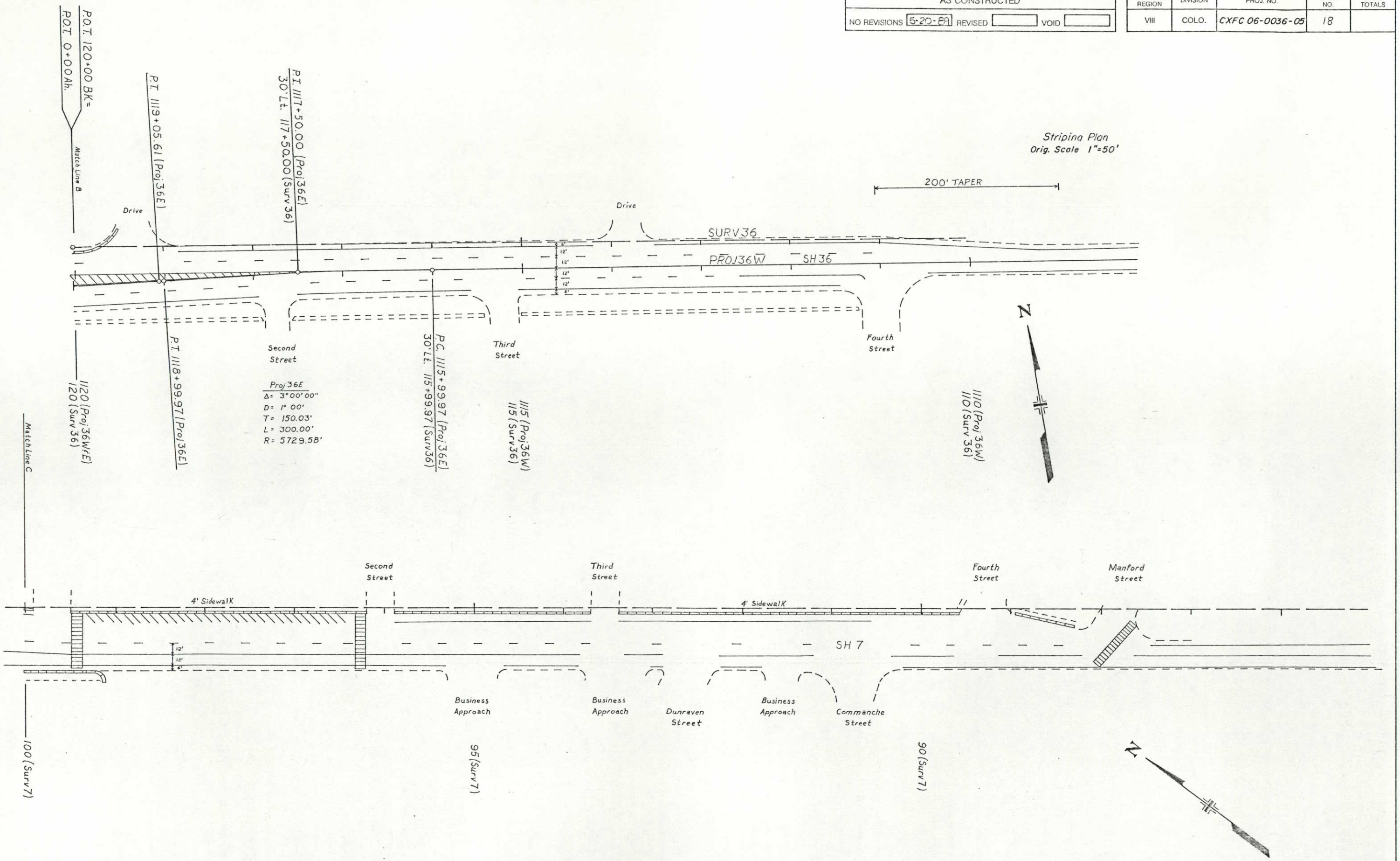

ATE OF COLORADO
ATE DEPARTMENT OF HIGHWAYS
VISION OF HIGHWAYS
O. H. FORM NO.1128
V. FEB. 1984

AS CONSTRUCTED				
NO REVISIONS 5-20-89	REVISED		VOID	

FED.ROAD REGION	DIVISION	PROJ. NO.	SHEET NO.	SHEET TOTALS
VIII	COLO.	CXFC 06-0036-05	19	

Signing Plan

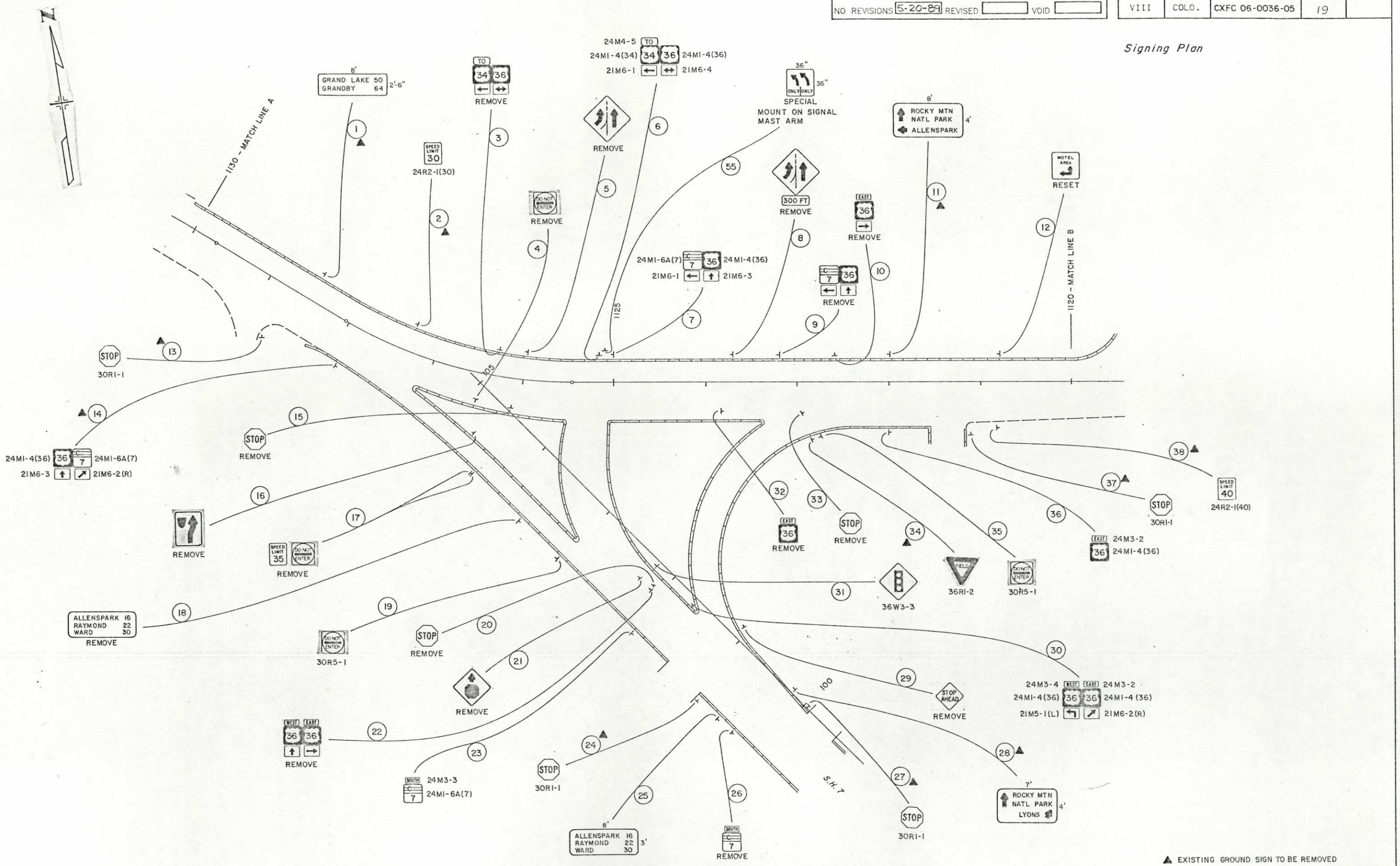

▲ EXISTING GROUND SIGN TO BE REMOVED

AS CONSTRUCTED	FED. ROAD REGION	DIVISION	PROJ. NO.	SHEET NO.	SHEET TOTALS
NO REVISIONS 5-20-89 REVISED VOID	VIII	COLO.	CXFC 06-0036-05	20	

Signing Plan

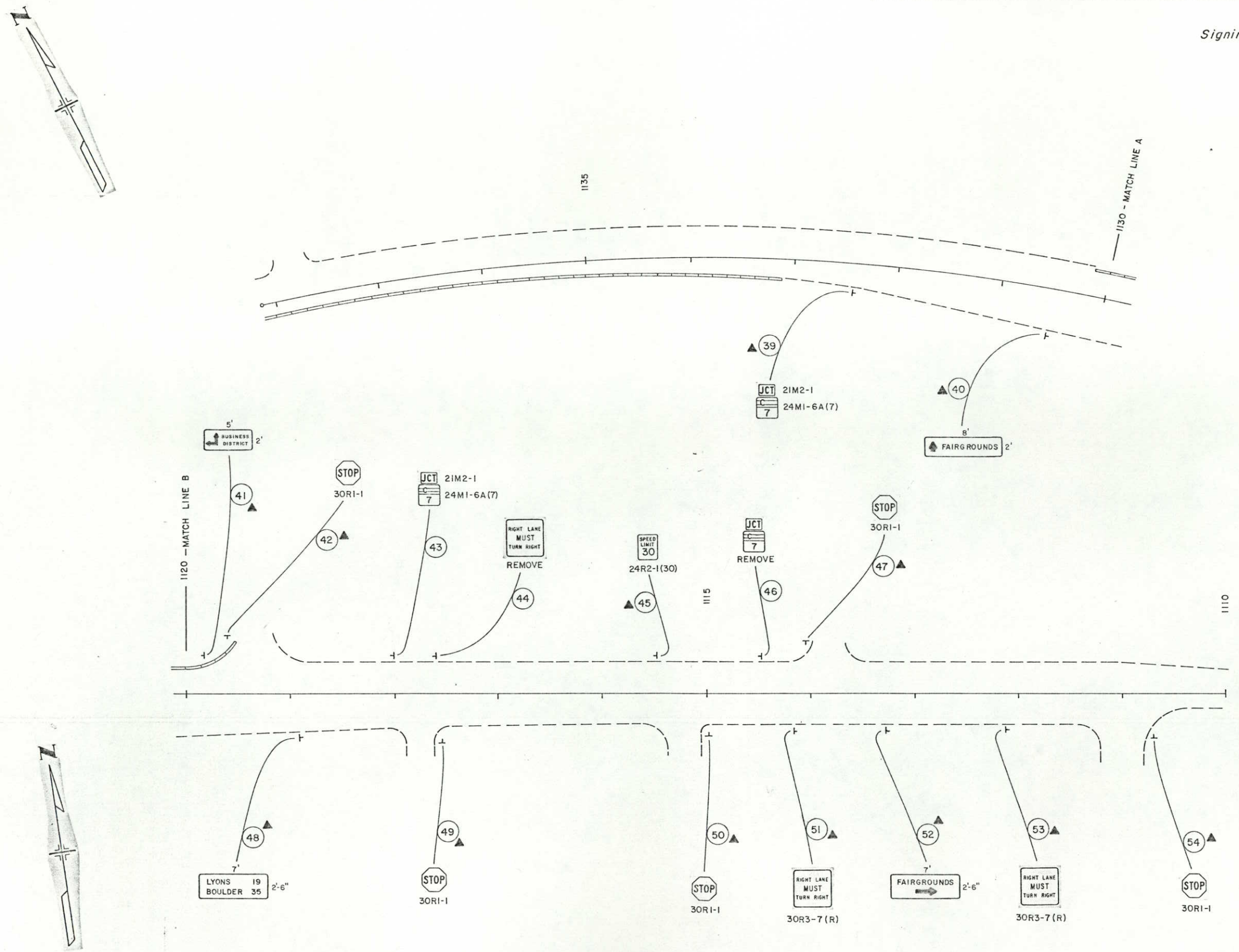

▲ EXISTING GROUND SIGN TO BE REMOVED

CLASS III SIGNS - SHEET I

AS CONSTRUCTED			
NO REVISIONS	5-20-89	REVISED	VOID

FEDERAL ROAD REGION NO.	DISTRICT	PROJ. NO.	SHEET NO.	TOTAL SHEETS
VIII	COLORADO	CXFC 06-0036-05	21	

REVISIONS		

TYPICAL PANEL ELEVATIONS

HORIZONTAL SECTIONS

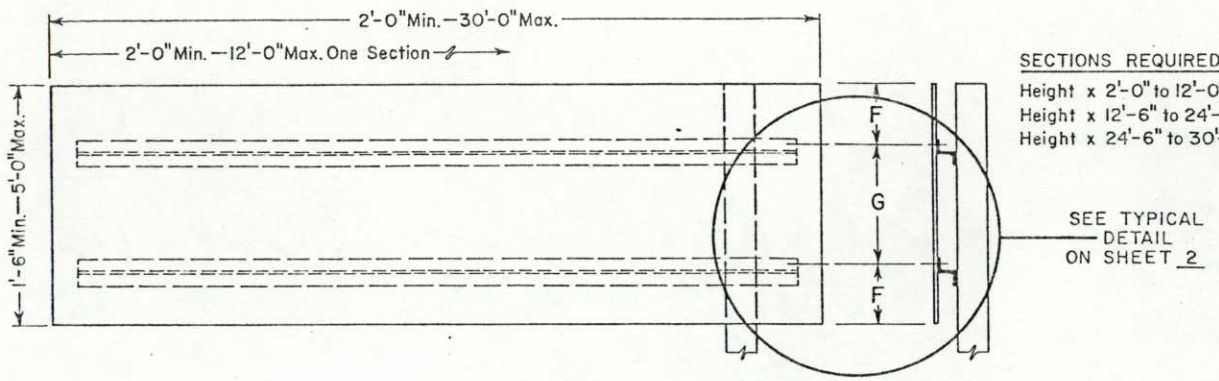

SECTIONS REQUIRED
Height x 2'-0" to 12'-0" = 1 Section
Height x 12'-6" to 24'-0" = 2 Sections
Height x 24'-6" to 30'-0" = 3 Sections

VERTICAL SECTIONS

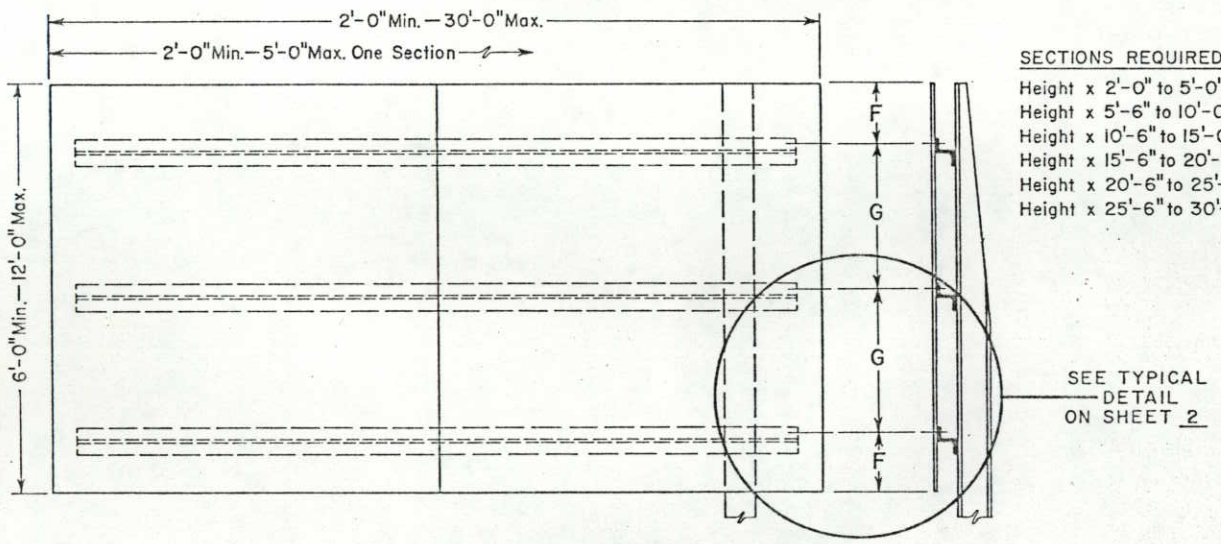

SECTIONS REQUIRED
Height x 2'-0" to 5'-0" = 1 Section
Height x 5'-6" to 10'-0" = 2 Sections
Height x 10'-6" to 15'-0" = 3 Sections
Height x 15'-6" to 20'-0" = 4 Sections
Height x 20'-6" to 25'-0" = 5 Sections
Height x 25'-6" to 30'-0" = 6 Sections

MULTI-VERTICAL SECTIONS

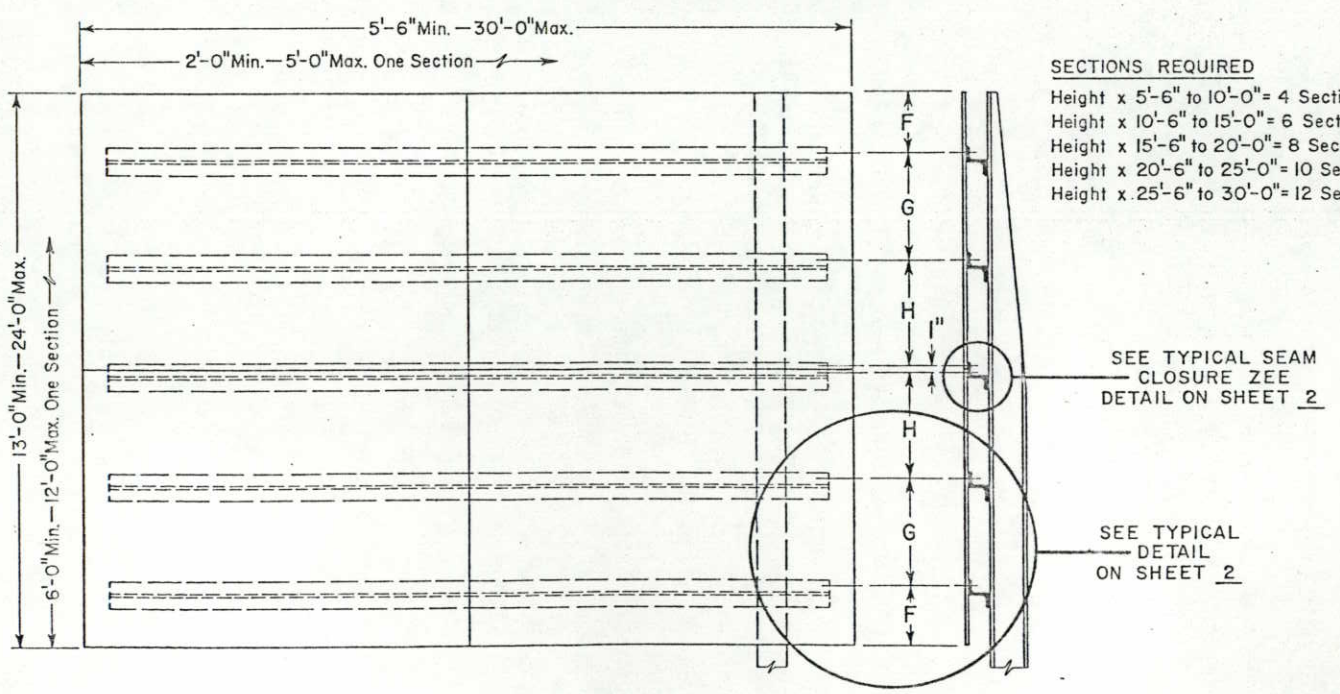

SECTIONS REQUIRED
Height x 5'-6" to 10'-0" = 4 Sections
Height x 10'-6" to 15'-0" = 6 Sections
Height x 15'-6" to 20'-0" = 8 Sections
Height x 20'-6" to 25'-0" = 10 Sections
Height x 25'-6" to 30'-0" = 12 Sections

GENERAL NOTES

1. ALL WORK SHALL BE DONE IN ACCORDANCE WITH THE STANDARD SPECIFICATIONS APPLICABLE TO THE PROJECT.
2. SEE THE APPLICABLE STANDARDS FOR SIGN PLACEMENT, FOOTING DETAILS AND POST SPACING TABLE.
3. A (No. 6) 90° COUNTERSUNK ALUMINUM LOCKBOLT FASTENER SHALL BE USED TO FASTEN THE SIGN PANEL TO THE BACKING ZEE. A HEX-HEAD BOLT WITH NUT AND WASHERS SHALL BE USED TO FASTEN THE BACKING ZEE TO A TIMBER POST OR TO A STEEL POST.
4. A FLAT WASHER SHALL BE PLACED BETWEEN THE BOLT HEAD AND THE BACKING ZEE. A LOCK WASHER SHALL BE PLACED UNDER THE NUT ON A STEEL POST OR A BACKING ZEE. A C.I.Ogee WASHER SHALL BE PLACED UNDER THE BOLT HEAD ON A TIMBER POST.
5. THE EXPOSED LOCKBOLT HEADS ON THE FACE OF THE SIGN PANEL SHALL BE COVERED WITH REFLECTIVE SHEETING (TO BE A PART OF THE LOCKBOLT HEAD) TO MATCH THE BACKGROUND COLOR OF THE SIGN.
6. ALL EXPOSED SIGN PANEL SECTION JOINTS, EXCEPT THE MULTI-VERTICAL SECTIONS HORIZONTAL SEAM, SHALL BE COVERED ON THE BACKSIDE OF THE SIGN PANEL WITH AN ALUMINUM CLOSURE STRIP. CLOSURE STRIPS SHALL BE BONDED TO THE SIGN PANEL WITH AN EPOXY RESIN WHICH MEETS THE REQUIREMENTS SPECIFIED IN ASTM DESIGNATION — D 1763, PART 9. ALL BONDED SURFACES SHALL BE CLEAN AND FREE OF ANY FOREIGN MATTER.
7. SIGN PANELS SHALL BE CONSTRUCTED FROM THE LEAST NUMBER OF SECTIONS. THE SECTIONS SHALL BE AS LARGE AS POSSIBLE AND AS NEARLY EQUAL IN SIZE AS POSSIBLE, ACCORDING TO THE LIMITS SHOWN.
8. FOR ADDITIONAL POST AND PANEL INFORMATION SEE THE "TABULATION OF SIGNS" INCLUDED IN THE PLANS.

SPACING TABLE FOR ALUMINUM BACKING ZEES

SIGN NO.	PANEL SIZE	NO. OF ZEES	ZEE SIZE	OVERHANG "F"	SPACING "G"	SPACING "H"
41	5'x2'	2	3" x 2 11/16" x 2.33	0'-5"	1'-2"	—
48,52	7'x2'-6"	2	3" x 2 11/16" x 2.33	0'-6"	1'-6"	—
28	7'x4'	2	3" x 2 11/16" x 2.33	0'-11"	2'-2"	—
40	8'x2'	2	3" x 2 11/16" x 2.33	0'-5"	1'-2"	—
1	8'x2'-6"	2	3" x 2 11/16" x 2.33	0'-6"	1'-6"	—
25	8'x3'	2	3" x 2 11/16" x 2.33	0'-7"	1'-10"	—
11	8'x4'	2	3" x 2 11/16" x 2.33	0'-11"	2'-2"	—

DEPARTMENT OF HIGHWAYS
STATE OF COLORADO
DIVISION OF HIGHWAYS

CLASS III SIGNS
SHEET ALUMINUM
PANELS

CLASS III SIGNS - SHEET I

CLASS III SIGNS – SHEET 2

AS CONSTRUCTED			
NO REVISIONS	15-20-89	REVISED	VOID

FED. ROAD REGION	DIVISION	PROJ. NO.	SHEET NO.	TOTAL SHEETS
VIII	COLO.	CXFC 06-0036-05	22	

REVISIONS	

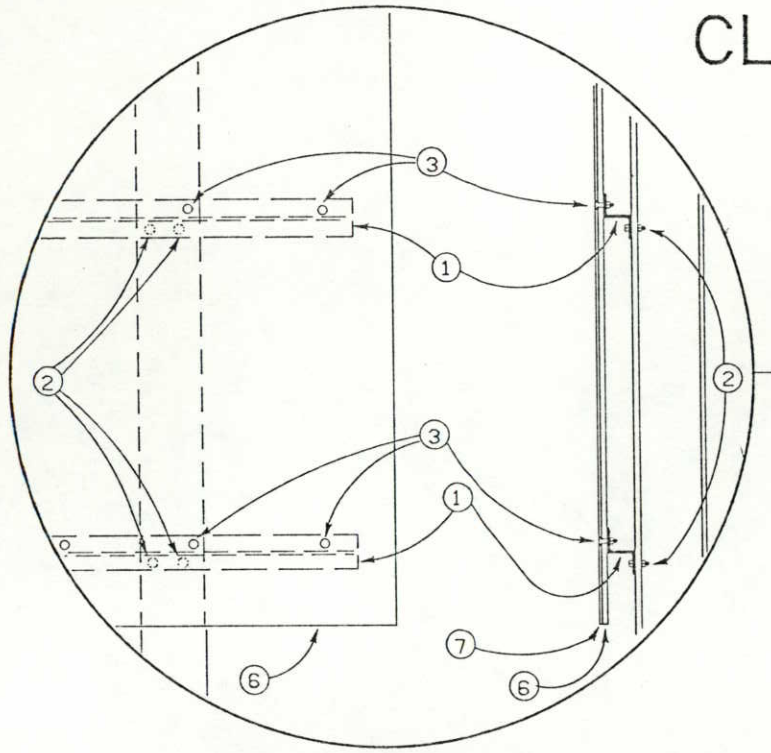

FABRICATION NOTES

1. BACKING ZEE. See "SPACING TABLE". Aluminum Alloy 6061-T6. Each zee to be provided with a 9/16" x 2" horizontal slot for each post mounting bolt. The length of each zee to be 1'-0" less than the sign panel width.
2. 3/8" Ø HEX-HEAD BOLT. With nut and washers: 2 per backing zee per post are required.
3. 3/8" Ø (No. 6) 90° COUNTERSUNK ALUMINUM LOCKBOLT FASTENER.
4. 2" x 0.080" ALUMINUM CLOSURE STRIP.
5. 1/8" Ø X 3/8" UNIVERSAL-HEAD, HOLLOW SHANK ALUMINUM RIVET.
6. SHEET ALUMINUM. 0.125" minimum thickness.
7. NON-EXPOSED LENS REFLECTIVE SHEETING. To have a dry (heat-activated) adhesive backing.

TYPICAL DETAIL SEAM CLOSURE ZEE

(MULTI-VERTICAL SECTIONS, HORIZONTAL SEAMS)

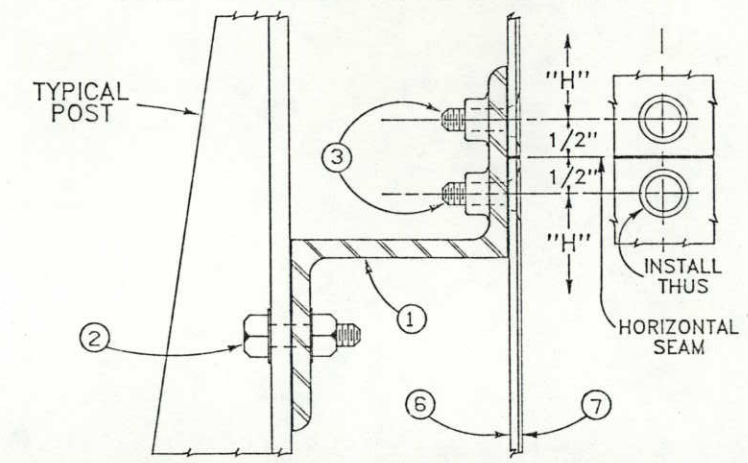

TYPICAL TIMBER POST INSTALLATION

PANEL FABRICATION AND MOUNTING DETAILS

TYPICAL VIEW

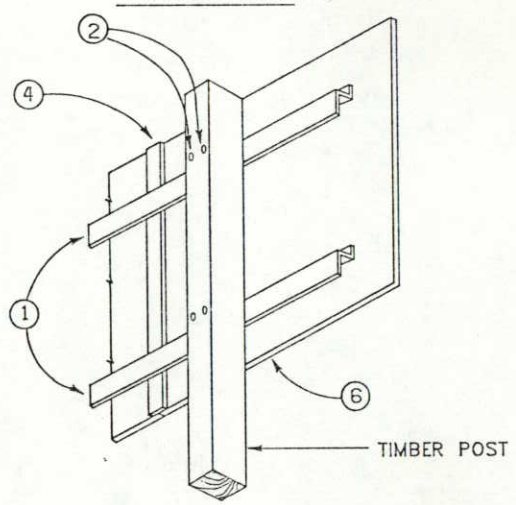

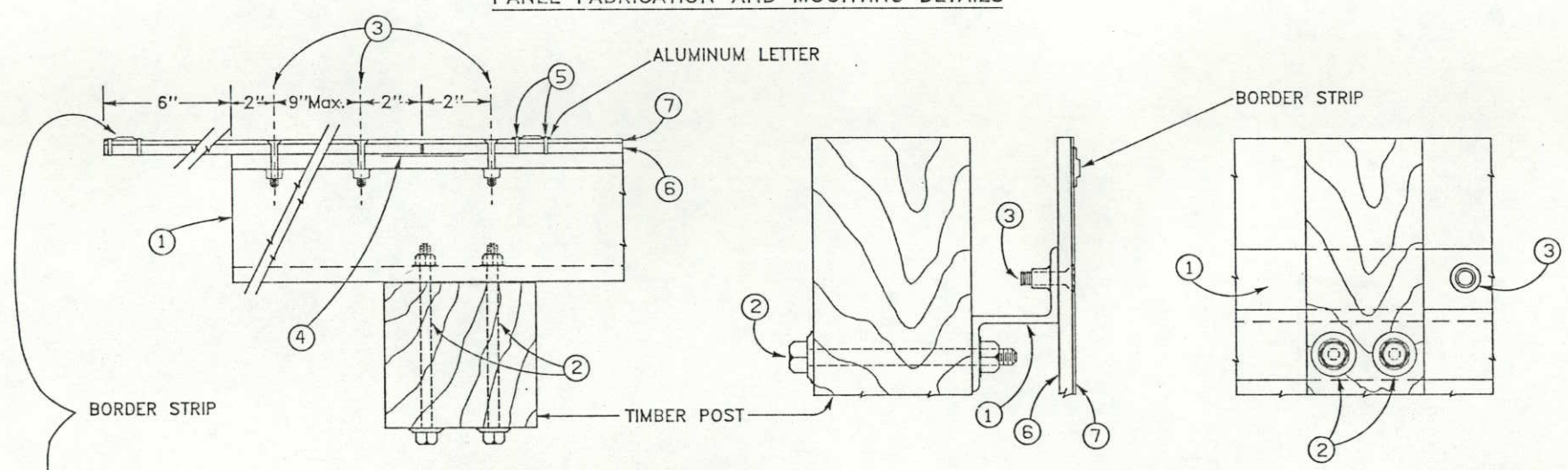

TYPICAL STEEL POST INSTALLATION

PANEL FABRICATION AND MOUNTING DETAILS

TYPICAL VIEW

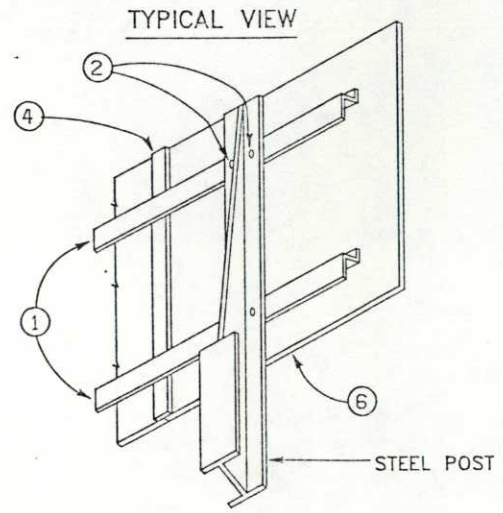

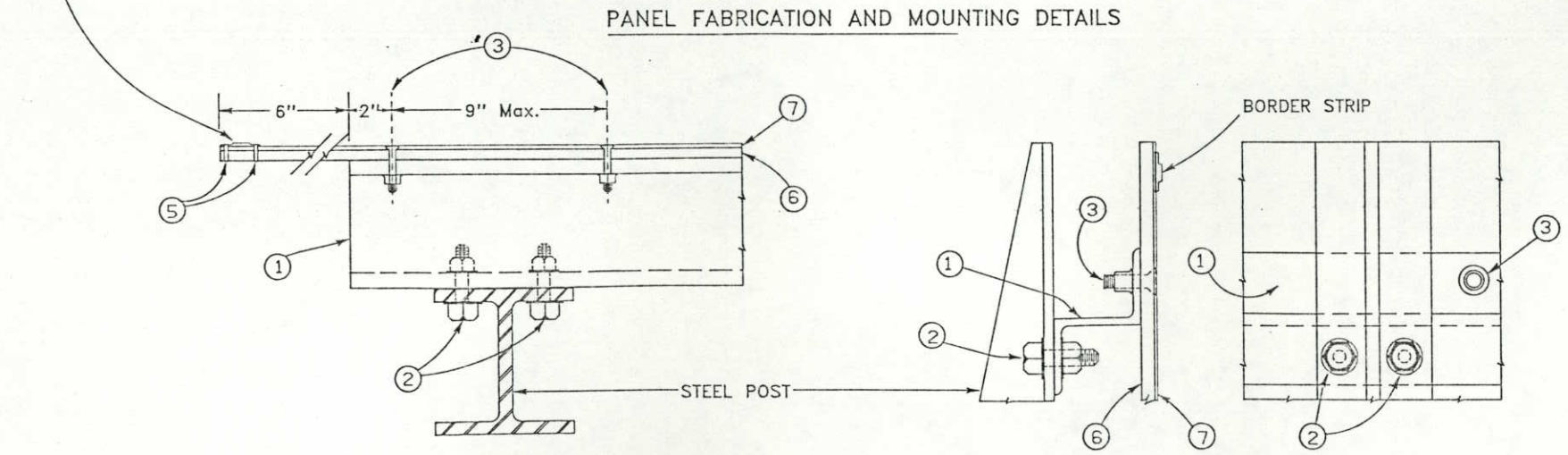

TYPICAL BORDER DETAILS WITH EXIT NUMBER

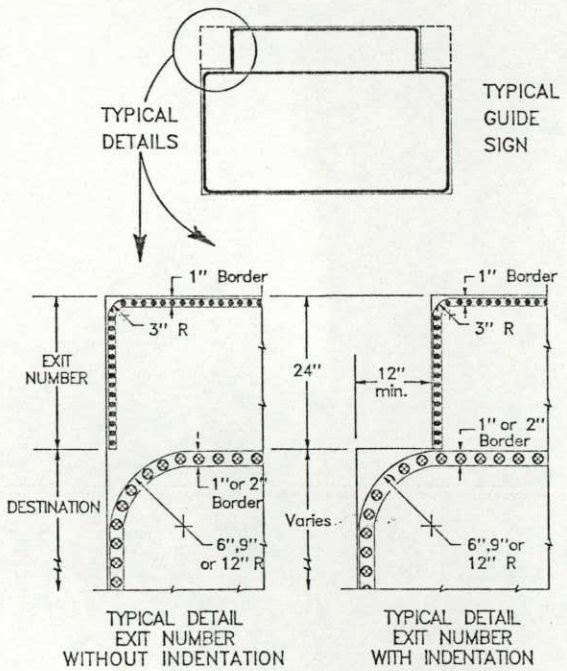

TYPICAL DETAIL EXIT NUMBER WITHOUT INDENTATION

TYPICAL DETAIL EXIT NUMBER WITH INDENTATION

DEPARTMENT OF HIGHWAYS
STATE OF COLORADO
DIVISION OF HIGHWAYS

CLASS III SIGNS
SHEET ALUMINUM
PANELS

CLASS III SIGNS – SHEET 2

STANDARD S-614-5

(SHEET 1 OF 2 SHEETS)

SPECIAL FOR THIS PROJECT

AS CONSTRUCTED			
NO REVISION	5-20-84	REVISED	VOID

FEDERAL ROAD REGION NO.	DIVISION	PROJ. NO.	SHEET NO.	TOTAL SHEETS
VIII	COLORADO	CXFC 06-0036-05	23	

REVISIONS		

TYPICAL ELEVATION STEEL POST ASSEMBLY

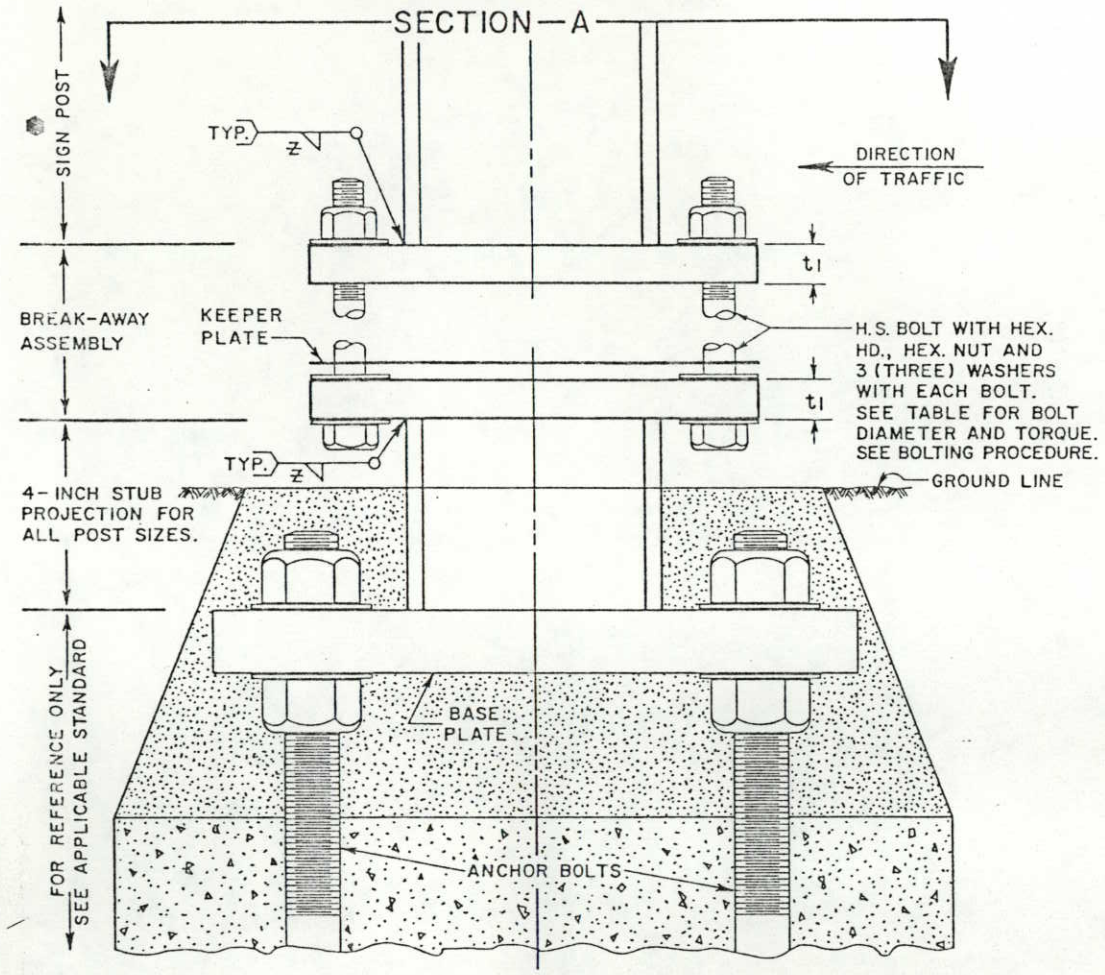

TYPICAL SECTION -A-

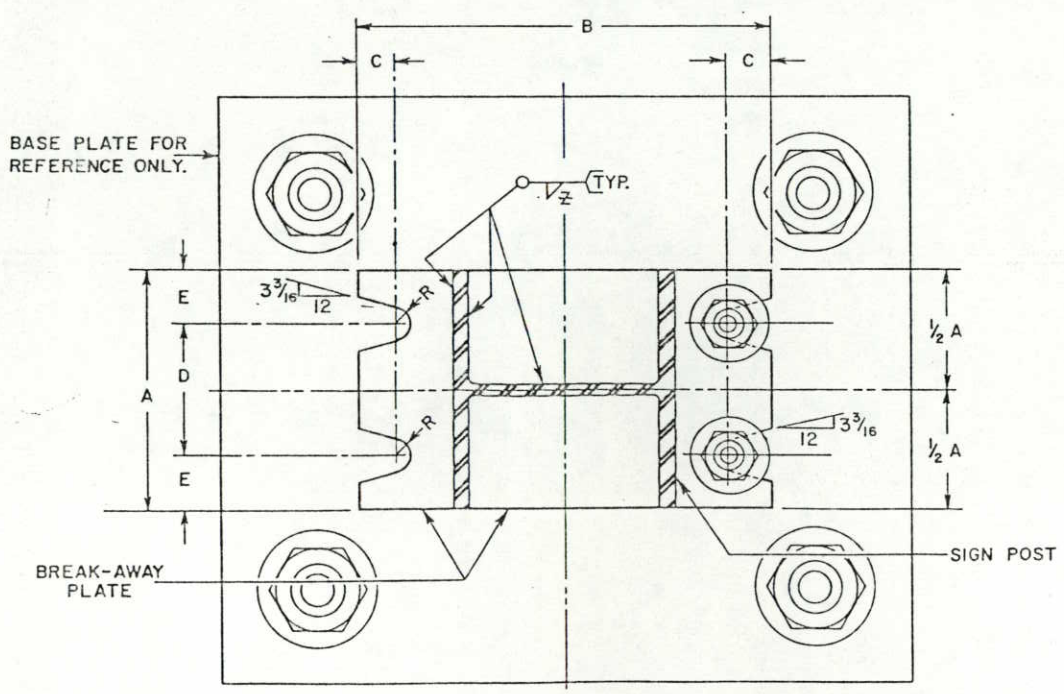

TYPICAL BREAK-AWAY SIGN SUPPORT INSTALLATIONS

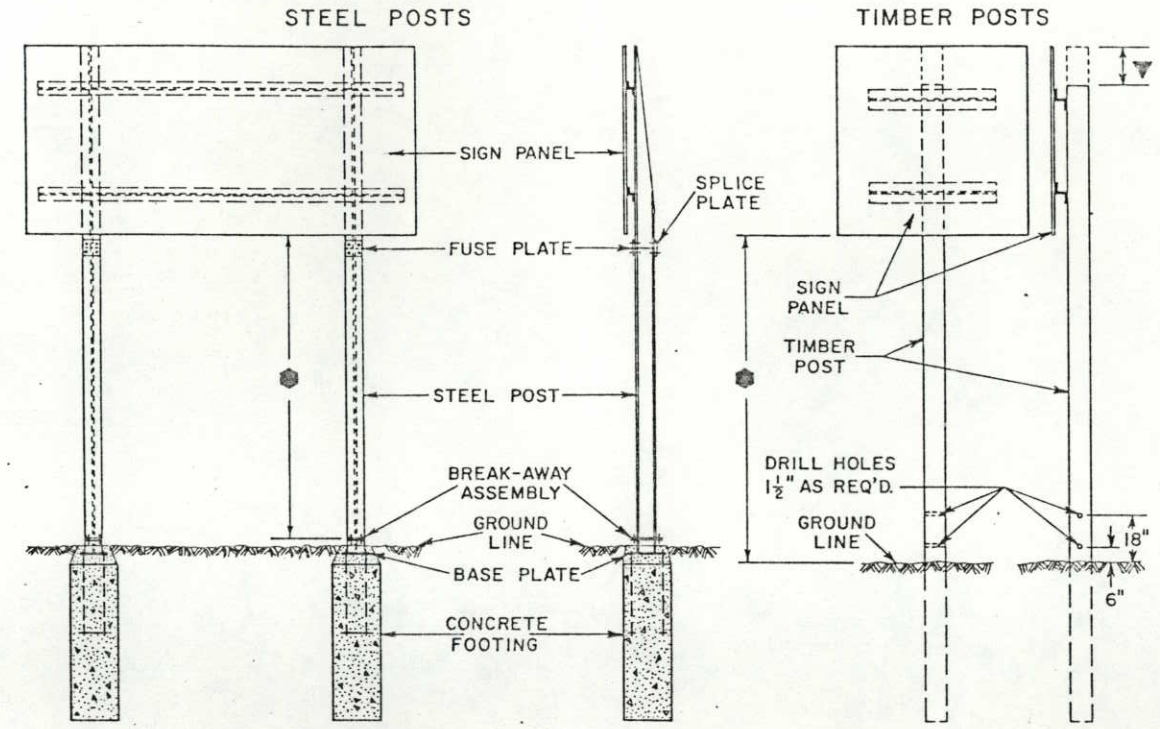

TYPICAL PROJECTED VIEW STEEL POST ASSEMBLY

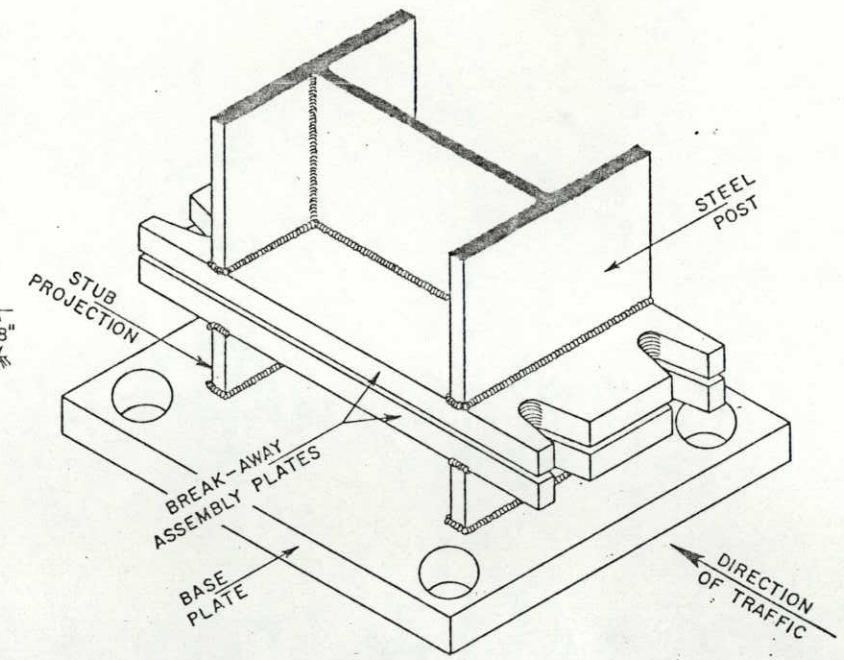

GENERAL NOTES

1. All work shall be done in accordance with the Standard Specifications applicable to the Project.
2. Design conforms with AASHTO "Specifications for the Design and Construction of Structural Supports for Highway Signs".
3. All structural steel shall conform to ASTM – A36 and Section 509 of the Standard Specifications.
4. Steel fuse plates and splice plates shall conform to ASTM – A36.
5. All high strength bolts, nuts and washers shall conform to ASTM – A325. Washers used in the Break-Away Plate and Fuse Plate assemblies shall be of sufficient strength to prevent any deflection or "cupping" into the slotted grooves under bolt torquing.
6. All bolts other than high strength bolts shall conform to ASTM – A307.
7. All bolts, nuts, and washers shall be galvanized as per ASTM-A153 or ASTM-A164.
8. All holes except in fuse plate may be drilled or sub-punched and reamed.
9. All steel cuts shall preferably be saw cuts; however, flame cutting will be permitted provided all edges are ground. Remove all burrs. Metal shall not project beyond the plane of the plate face.
10. A "Keeper Plate" of thin (28-gage) galvanized sheet metal, fabricated to match break-away plate dimensions but with holes rather than slots, shall be used to restrain bolt loosening due to wind vibration.
11. High strength bolts in the break-away assembly shall be tightened only to the torque shown in the table. DO NOT OVERTIGHTEN.
12. The "STUB POST" and one "BREAK-AWAY PLATE" are considered part of the footing. The other "BREAK-AWAY PLATE" and all nuts, bolts, washers and keeper plate for fastening the break-away plates are considered to be a part of the post.
13. Timber posts shall be in accordance with Section 614 of the Standard Specifications as to Size, Alternate Size, Grade, Species, Treatment, and Break-Away Holes.
14. For all base plate and footing work see the applicable Standard included in the plans.
15. For additional information, refer to "Tabulation of Signs" and "Cross Sections for Class III Signs" included in the plans.
16. ▼ Timber post flush with top of sign panel for direct mount and 3 3/16" minimum above bolt for backing zee mount.
17. ⬢ Minimum post length from bottom of sign panel to break-away assembly or ground line shall be 7' (in no case shall a backing zee be placed below the fuse plates).

BREAK-AWAY PLATE DATA TABLE

DIMENSION / POST SIZE	BOLT SIZE AND TORQUE	A	B	C	D	E	t1	WELD Z	R	STUB POST LENGTH
W 12 x 40	7/8" ø x 3 3/4" 1,135 In. Lb.	8"	19 1/4"	1 5/8"	4"	2"	1 1/4"	3/8"	13/32"	0'-4"
W 12 x 35	3/4" ø x 3 1/2" 750 In. Lb.	6 1/2"	17"	7/8"	3 1/2"	1 1/2"	1"	5/16"	13/32"	0'-4"
W 10 x 26		5 3/4"	14 7/8"	7/8"	3 1/4"	1 1/4"	1"	5/16"	13/32"	0'-4"
W 10 x 22		5 3/4"	14 5/8	7/8"	3 1/4"	1 1/4"	1"	5/16"	13/32"	0'-4"
W 8 x 21		5 1/4"	12 5/8"	7/8"	2 3/4"	1 1/4"	1"	5/16"	13/32"	0'-4"
W 8 x 18	5/8" ø x 2 3/4" 450 In. Lb.	5 1/4"	12"	3/4"	3"	1 1/8"	3/4"	1/4"	11/32"	0'-4"
W 6 x 15		6"	10"	3/4"	3 3/4"	1 1/8"	3/4"	1/4"	11/32"	0'-4"
W 6 x 12		5"	10"	3/4"	2 3/4"	1 1/8"	3/4"	1/4"	11/32"	0'-4"

BOLTING PROCEDURE FOR BREAK-AWAY PLATE ASSEMBLY

1. Assemble post to stub with bolts – one flat washer on each bolt top and bottom, and one flat washer and the keeper plate between the break-away plates.
2. Tighten all bolts to a "snug tight" condition with a 12" to 15" wrench to bed washers and to clean bolt threads, then loosen each bolt in turn and retighten in a systematic order to the prescribed torque. (See Break-Away Plate Data Table)
3. Burr threads at junction with nut to prevent nut loosening.

DEPARTMENT OF HIGHWAYS
STATE OF COLORADO
DIVISION OF HIGHWAYS
BREAK-AWAY SIGN SUPPORT DETAILS FOR GROUND SIGNS

Designed By: J. J. B.
Made By: F. J. B.
Checked By: J. E. M.

Approved By: Wm. E. Tucker
Staff Traffic & Safety Projects Engineer
Date: January, 19 80