Oversight / NHS	
FHWA REGION VIII OVERSIGHT?	■ NO □ YES
NATIONAL HIGHWAY SYSTEM?	■ NO □ YES

DEPARTMENT OF TRANSPORTATION
STATE OF COLORADO

HIGHWAY CONSTRUCTION BID PLANS OF PROPOSED
COLORADO PROJECT NO. FBR 3501-013
STATE HIGHWAY NO. 350
LAS ANIMAS COUNTY
CONSTRUCTION PROJECT CODE NO. 18208

Related Projects:
P. E. UNDER PROJECT:
Project Number FBR 3501-013
Project Code: 18208

R.O.W. Projects:
R.O.W. Project Description
FBR 3501-013 (18208)

TABULATION OF LENGTH

STATION	FEET ROADWAY SH 350	FEET MAJOR STR.
BEGIN Project FBR 3501-013 = ON SH 350, approx. MP 6.3		
no work zone	1,336.16	
Begin roadway construction STA. 110+00, approx. MP 6.553		
	345.00	
STA. 113+45.00 BEGIN STRUCTURE O-19-R		
		257.58
STA. 116+02.58 END STRUCTURE O-19-R		
	397.42	
End roadway construction STA. 121+00, approx. MP 6.761		
no work zone	1,262.24	
END Project FBR 3501-013 = ON SH 350, approx. MP 7.0		
SUMMARY OF PROJECT LENGTH	FEET	MILES
ROADWAY (NET LENGTH)	3340.8	0.633
PROJECT (GROSS LENGTH)	3598.4	0.682

DESIGN DATA	SH 350
MAXIMUM RADIUS OF CURVE	na
MAXIMUM GRADE	na
MINIMUM S.S.D. HORIZONTAL	na
MINIMUM S.S.D. VERTICAL	na
MAXIMUM DESIGN SPEED	65 MPH
2030 DESIGN TRAFFIC	DHV = 147 ADT = 1222
DHV TRUCK %	13.20%
CLEAR ZONE DISTANCE (TANGENT)	30 FT.
CONSTRUCTION CLEAR ZONE (MIN 18')	18 FT.

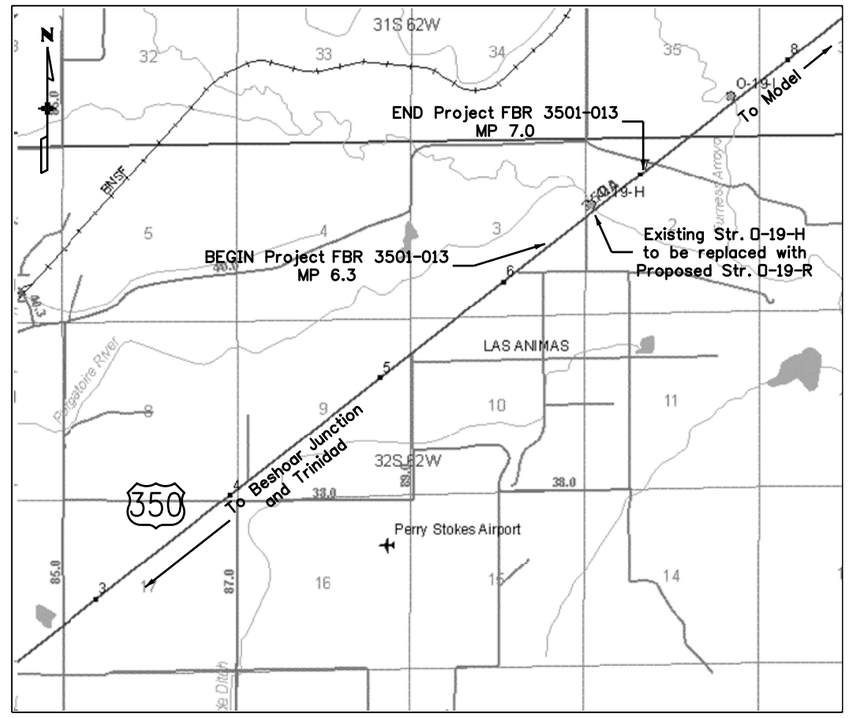

PROJECT LOCATION MAP
N.T.S.

Know what's **below.**
Call before you dig.

SHEET NO.	INDEX OF SHEETS
1	TITLE SHEET
2	STANDARD PLANS LIST
3	GEOMETRY & TABULATION EARTHWORK
4	350 ROADWAY and DETOUR TYPICAL SECTIONS
5	GENERAL NOTES
6 - 9	SUMMARY OF APPROXIMATE QUANTITIES
	TABULATION SHEETS
10	- SURFACING & PAVEMENT MARKINGS
11	- GUARDRAIL, DRAINAGE ITEMS & CONDUIT
12	- SIGNS, DELINEATORS & DETOUR ITEMS
13	- TRAFFIC CONTROL SIGNS & DEVICES
14 - 16	PLAN SHEETS
17	PROFILE SHEET
18 - 20	PLAN SHEETS - DETOUR -
21	PROFILE SHEET - DETOUR -
	BRIDGE, HYDRAULICS AND DRAINAGE SHEETS
22	- GENERAL INFORMATION
23	- SUMMARY OF QUANTITIES
24	- GENERAL LAYOUT
25	- TYPICAL SECTION
26	- ENGINEERING GEOLOGY
27 - 28	- HYDRAULIC INFORMATION
29 - 30	- CONSTRUCTION LAYOUT
31	- FOUNDATION LAYOUT
32	- CAISSON DETAILS
33 - 35	- ABUTMENT DETAILS
36	- WINGWALL DETAILS
37 - 39	- PIER DETAILS
40	- DECK REINFORCING SECTION and PLAN
41	- PRESTRESSED CONCRETE BOX
42 - 43	- BRIDGE RAIL TYPE 10M
44	- APPROACH SLAB DETAILS
45 - 46	- BRIDGE EXPANSION DEVICE
47	- EXCAVATION AND BACKFILL
48	- MECHANICALLY STABILIZED BACKFILL
49 - 52	- BRIDGE DECK ELEVATIONS
53	AERIAL WATERLINE DETAILS
54 - 57	STORMWATER MANAGEMENT PLANS
58 - 59	INTERIM STORMWATER MANAGEMENT SITE MAPS
60 - 61	FINAL STORMWATER MANAGEMENT SITE MAPS
62	WETLANDS and RIPARIAN MITIGATION PLAN SHEET
63	SURVEY TABULATION SHEET
64	TEMPORARY EASEMENT PLAN SHEET
65 - 70	SURVEY CONTROL DIAGRAM SHEETS

Print Date: 2/5/2013
File Name: 18208DES_TitleSht.dgn
Horiz. Scale: 1:1 Vert. Scale: As Noted
Unit Information Unit Leader Initials

R-X

Sheet Revisions		
Date:	Comments	Init.

Colorado Department of Transportation
902 Erie Avenue
Pueblo, CO 81001
Phone: 719-546-5439 FAX: 719-546-5702
Region 2 JDH

As Constructed
No Revisions:
Revised:
Void:

Contract Information
Contractor:
Resident Engineer:
Project Engineer:
PROJECT STARTED: / / ACCEPTED: / /
Comments:

Project No./Code
FBR 3501-013
18208
Sheet Number 1

PLAN NUMBER	NEW OR REVISED	M STANDARD TITLE	PAGE NUMBER
■ M-100-1		STANDARD SYMBOLS (3 SHEETS)	1-3
■ M-100-2		ACRONYMS AND ABBREVIATIONS (4 SHEETS)	4-7
■ M-203-1		APPROACH ROADS	8
M-203-2		DITCH TYPES	9
M-203-11		SUPERELEVATION CROWNED AND DIVIDED HIGHWAYS (3 SHEETS)	10-12
M-203-12		SUPERELEVATION STREETS (2 SHEETS)	13-14
M-206-1		EXCAVATION AND BACKFILL FOR STRUCTURES (2 SHEETS)	15-16
M-206-2		EXCAVATION AND BACKFILL FOR BRIDGES (2 SHEETS)	17-18
■ M-208-1		TEMPORARY EROSION CONTROL (12 SHEETS)	19-30
M-210-1		MAILBOX SUPPORTS (2 SHEETS)	31-32
■ M-214-1		PLANTING DETAILS	33
M-412-1	▭	CONCRETE PAVEMENT JOINTS (5 SHEETS) (REVISED ON JULY 24, 2012)	~~34-38~~
M-510-1		STRUCTURAL PLATE PIPE H-20 LOADING	39
M-601-1		SINGLE CONCRETE BOX CULVERT (2 SHEETS)	40-41
M-601-2		DOUBLE CONCRETE BOX CULVERT (2 SHEETS)	42-43
M-601-3		TRIPLE CONCRETE BOX CULVERT (2 SHEETS)	44-45
M-601-10		HEADWALL FOR PIPES	46
M-601-11		TYPE "S" SADDLE HEADWALLS FOR PIPE	47
M-601-12		HEADWALLS AND PIPE OUTLET PAVING	48
M-601-20		WINGWALLS FOR PIPE OR BOX CULVERTS	49
M-603-1		METAL PIPE (4 SHEETS)	50-53
M-603-2		REINFORCED CONCRETE PIPE	54
M-603-3		PRECAST CONCRETE BOX CULVERT	55
M-603-4		CORRUGATED POLYETHYLENE PIPE (AASHTO M294)	56
M-603-5		POLYVINYL CHLORIDE (PVC) PIPE (AASHTO M304)	57
M-603-10		CONCRETE AND METAL END SECTIONS (2 SHEETS)	58-59
M-604-10		INLET, TYPE C	60
M-604-11		INLET, TYPE D	61
M-604-12		CURB INLET TYPE R (2 SHEETS)	62-63
M-604-13		CONCRETE INLET TYPE 13	64
M-604-20		MANHOLES (3 SHEETS)	65-67
M-604-25		VANE GRATE INLET (5 SHEETS)	68-72
M-605-1		SUBSURFACE DRAINS	73
■ M-606-1		GUARDRAIL TYPE 3 W-BEAM (19 SHEETS)	74-92
M-606-13		GUARDRAIL TYPE 7 F-SHAPE BARRIER (4 SHEETS)	93-96
■ M-606-14		PRECAST TYPE 7 CONCRETE BARRIER (3 SHEETS)	97-99

PLAN NUMBER	NEW OR REVISED	M STANDARD TITLE	PAGE NUMBER
■ M-607-1		WIRE FENCES AND GATES (3 SHEETS)	100-102
M-607-2		CHAIN LINK FENCE (3 SHEETS)	103-105
M-607-3		BARRIER FENCE	106
M-607-4		DEER FENCE AND GATES (3 SHEETS)	107-109
M-607-10		PICKET SNOW FENCE	110
M-607-15		ROAD CLOSURE GATE (9 SHEETS)	111-119
M-608-1		CURB RAMPS (6 SHEETS)	120-125
M-609-1	■	CURBS, GUTTERS, AND SIDEWALKS (4 SHEETS) (REVISED ON JULY 24, 2012)	~~126-129~~
M-611-1		CATTLE GUARD (2 SHEETS)	130-131
M-613-1		ROADWAY LIGHTING (4 SHEETS)	132-135
M-614-1		RUMBLE STRIPS (3 SHEETS)	136-138
M-614-2		SAND BARREL ARRAYS (2 SHEETS)	139-140
M-615-1		EMBANKMENT PROTECTOR TYPE 3	141
■ M-615-2		EMBANKMENT PROTECTOR TYPE 5	142
M-616-1		INVERTED SIPHON	143
M-620-1		FIELD LABORATORY CLASS 1	144
■ M-620-2		FIELD LABORATORY CLASS 2 (2 SHEETS)	145-146
M-620-11		FIELD OFFICE CLASS 1	147
■ M-620-12		FIELD OFFICE CLASS 2	148
M-629-1		SURVEY MONUMENTS (2 SHEETS)	149-150

PLAN NUMBER	NEW OR REVISED	S STANDARD TITLE	PAGE NUMBER
■ S-612-1		DELINEATOR INSTALLATIONS (7 SHEETS)	151-157
S-614-1	■	GROUND SIGN PLACEMENT (2 SHEETS) (REVISED ON JULY 24, 2012)	~~158-159~~
■ S-614-2		CLASS I SIGNS	160
■ S-614-3		CLASS II SIGNS	161
S-614-4		CLASS III SIGNS (3 SHEETS)	162-164
S-614-5		BREAK-AWAY SIGN SUPPORT DETAILS FOR GROUND SIGNS (2 SHEETS)	165-166
S-614-6		CONCRETE FOOTINGS AND SIGN ISLANDS FOR CLASS III SIGNS (2 SHEETS)	167-168
■ S-614-8		TUBULAR STEEL SIGN SUPPORT DETAILS (5 SHEETS)	169-173
S-614-9		PEDESTRIAN PUSH BUTTON POST ASSEMBLY	174
S-614-10		MARKER ASSEMBLY INSTALLATIONS	175
S-614-11		MILEPOST SIGN DETAIL FOR HIGH SNOW AREAS	176
■ S-614-12		STRUCTURE NUMBER INSTALLATION	177
S-614-14		FLASHING BEACON AND SIGN INSTALLATIONS (3 SHEETS)	178-180
S-614-20		TYPICAL POLE MOUNT SIGN INSTALLATIONS	181
S-614-21		CONCRETE BARRIER SIGN POST INSTALLATIONS	182
S-614-22		TYPICAL MULTI-SIGN INSTALLATIONS	183
S-614-40		TYPICAL TRAFFIC SIGNAL INSTALLATION DETAILS (5 SHEETS)	184-188
S-614-40A	▭	ALTERNATIVE TRAFFIC SIGNAL INSTALLATION DETAILS (4 SHEETS) (REVISED ON SEPTEMBER 25, 2012)	~~189-192~~
S-614-41		PEDESTAL POLE AND TEMPORARY SPAN WIRE SIGNALS	193
S-614-42		CABINET FOUNDATION DETAIL (4 SHEETS)	194-197
S-614-43		TRAFFIC LOOP AND MISCELLANEOUS SIGNAL DETAILS (10 SHEETS)	198-207
S-614-50		STATIC SIGN MONOTUBE STRUCTURES (12 SHEETS)	208-219
S-614-60	▭	DYNAMIC SIGN MONOTUBE STRUCTURES (14 SHEETS) (REVISED ON SEPTEMBER 25, 2012)	~~220-233~~
■ S-627-1	▭	PAVEMENT MARKINGS (5 SHEETS) (REVISED ON OCTOBER 18, 2012)	~~234-238~~
■ S-630-1		TRAFFIC CONTROLS FOR HIGHWAY CONSTRUCTION (20 SHEETS)	239-258
■ S-630-2		BARRICADES, DRUMS, CONCRETE BARRIERS (TEMP) AND VERTICAL PANELS	259
■ S-630-3		FLASHING BEACON (PORTABLE) DETAILS	260
■ S-630-4		STEEL SIGN SUPPORT (TEMPORARY) INSTALLATION DETAILS (2 SHEETS)	261-262
S-630-5		PORTABLE RUMBLE STRIPS (TEMPORARY) (2 SHEETS)	263-264
S-630-6		EMERGENCY PULL-OFF AREA (TEMPORARY)	265
S-630-7		ROLLING ROADBLOCKS FOR TRAFFIC CONTROL (3 SHEETS)	266-268

COLORADO
DEPARTMENT OF TRANSPORTATION

M&S STANDARDS PLANS LIST

July 04, 2012

Revised on December 13, 2012

ALL OF THE M&S STANDARD PLANS, AS SUPPLEMENTED AND REVISED, APPLY TO THIS PROJECT WHEN USED BY DESIGNATED PAY ITEM OR SUBSIDIARY ITEM.

NEW OR REVISED STANDARD PLAN SHEETS APPLICABLE TO THIS PROJECT, INDICATED BY A MARKED BOX ■, WILL BE ATTACHED TO THE PLANS.

Print Date: 1/25/2013
File Name: 18208_2012_M_and_S_Standards_Plans_List_Index.dgn
Horiz. Scale: 1:1 Vert. Scale: As Noted
Unit Information Unit Leader Initials

Sheet Revisions

Date:	Comments	Init.

Colorado Department of Transportation
DOT
DEPARTMENT OF TRANSPORTATION
902 Erie Avenue
Pueblo, CO 81001
Phone: 719-546-5439 FAX: 719-546-5702
Region 2 JDH

As Constructed
No Revisions:
Revised:
Void:

STANDARD PLANS LIST

Designer: jlb
Detailer: jlb
Sheet Subset: SPL
Structure Numbers: 0-19-R
Subset Sheets: 1 of 1

Project No./Code
FBR 3501-013
18208
Sheet Number 2

SH 350 HORIZONTAL ALIGNMENT GEOMETRY

Horizontal Alignment Name: Design Horizontal

	STATION	NORTHING	EASTING
Element: Linear			
POB	100+00.00	243319.95	62616.74
PI	106+20.61	243704.52	63103.83
Tangent Direction:	N 51^42'28" E		
Tangent Length:	620.61		
Element: Linear			
PI	106+20.61	243704.52	63103.83
PI	111+60.59	244039.51	63527.34
Tangent Direction:	N 51^39'24" E		
Tangent Length:	539.98		
Element: Linear			
PI	111+60.59	244039.51	63527.34
PI	117+20.10	244385.53	63967.03
Tangent Direction:	N 51^47'55" E		
Tangent Length:	559.51		
Element: Linear			
PI	117+20.10	244385.53	63967.03
PI	122+64.20	244721.48	64395.03
Tangent Direction:	N 51^52'13" E		
Tangent Length:	544.10		
Element: Linear			
PI	122+64.20	244721.48	64395.03
POE	127+62.36	245030.15	64786.04
Tangent Direction:	N 51^42'44" E		
Tangent Length:	498.17		

TABULATION OF EARTHWORK QUANTITIES

PAY ITEM	DESCRIPTION	UNIT	QUANTITY
203-00010	UNCLASSIFIED EXCAVATION (CIP)	(CY)	**3,725**
from computer cross-sections for roadways to and from the proposed structures			
	QUANTITIES BALANCE - FOR INFORMATION ONLY		
	TOTAL UNCLASSIFIED EXCAVATION (CIP)	(CY)	3,725
	Embankment - from roadway cross-sections	(CY)	170
	x Compaction Factor AASHTO T-99 (5%)	(CY)	9
	TOTAL EMBANKMENT	(CY)	179
	EXCESS EXCAVATION	(CY)	3,547
			3,725

The Unclassified Excavation (CIP) pay quantity includes the excavation of the existing roadway materials (asphalt, base course, etc.) and also the materials that must be excavated for the longer proposed structure. Removal of the existing asphalt mat will not be paid for separately.

DETOUR HORIZONTAL ALIGNMENT GEOMETRY

Horizontal Alignment Name: Detour

	STATION	NORTHING	EASTING
Element: Linear			
POB	100+00.00	243319.95	62616.74
PC	110+44.79	243967.77	63436.45
Tangent Direction:	N 51^40'50" E		
Tangent Length:	1044.79		
Element: Circular			
PC	110+44.79	243967.77	63436.45
PI	111+45.68	244030.32	63515.60
CC		244360.05	63126.42
PT	112+43.89	244118.68	63564.30
Radius:	500.00		
Design Speed(mph):	25.00		
Superelevation:	8.00%		
Delta:	22^48'56" Left		
Degree of Curvature(Arc):	11^27'33"		
Length:	199.10		
Tangent:	100.89		
Chord:	197.79		
Middle Ordinate:	9.88		
External:	10.08		
Tangent Direction:	N 51^40'50" E		
Radial Direction:	S 38^19'10" E		
Chord Direction:	N 40^16'22" E		
Radial Direction:	S 61^08'06" E		
Tangent Direction:	N 28^51'54" E		
Element: Linear			
PT	112+43.89	244118.68	63564.30
PC	112+77.72	244148.30	63580.64
Tangent Direction:	N 28^51'54" E		
Tangent Length:	33.83		
Element: Circular			
PC	112+77.72	244148.30	63580.64
PI	113+96.83	244252.61	63638.14
CC		243906.93	64018.52
PT	115+11.58	244319.80	63736.49
Radius:	500.00		
Delta:	26^47'54" Right		
Degree of Curvature(Arc):	11^27'33"		
Length:	233.86		
Tangent:	119.11		
Chord:	231.73		
Middle Ordinate:	13.61		
External:	13.99		
Tangent Direction:	N 28^51'54" E		
Radial Direction:	S 61^08'06" E		
Chord Direction:	N 42^15'50" E		
Radial Direction:	S 34^20'13" E		
Tangent Direction:	N 55^39'47" E		
Element: Linear			
PT	115+11.58	244319.80	63736.49
PC	115+57.60	244345.75	63774.48
Tangent Direction:	N 55^39'47" E		
Tangent Length:	46.02		
Element: Circular			
PC	115+57.60	244345.75	63774.48
PI	116+31.87	244387.65	63835.81
CC		243932.89	64056.51
PT	117+05.06	244409.90	63906.66
Radius:	500.00		
Delta:	16^53'51" Right		
Degree of Curvature(Arc):	11^27'33"		
Length:	147.46		
Tangent:	74.27		
Chord:	146.92		
Middle Ordinate:	5.43		
External:	5.49		
Tangent Direction:	N 55^39'47" E		
Radial Direction:	S 34^20'13" E		
Chord Direction:	N 64^06'43" E		
Radial Direction:	S 17^26'22" E		
Tangent Direction:	N 72^33'38" E		
Element: Linear			
PT	117+05.06	244409.90	63906.66
PC	117+72.98	244430.26	63971.47
Tangent Direction:	N 72^33'38" E		
Tangent Length:	67.93		
Element: Circular			
PC	117+72.98	244430.26	63971.47
PI	118+64.10	244457.57	64058.40
CC		244907.28	63821.62
PT	119+53.25	244513.79	64130.11
Radius:	500.00		
Delta:	20^39'24" Left		
Degree of Curvature(Arc):	11^27'33"		
Length:	180.26		
Tangent:	91.12		
Chord:	179.29		
Middle Ordinate:	8.10		
External:	8.24		
Tangent Direction:	N 72^33'38" E		
Radial Direction:	S 17^26'22" E		
Chord Direction:	N 62^13'56" E		
Radial Direction:	S 38^05'46" E		
Tangent Direction:	N 51^54'14" E		
Element: Linear			
PT	119+53.25	244513.79	64130.11
PI	122+89.87	244721.48	64395.03
Tangent Direction:	N 51^54'14" E		
Tangent Length:	336.62		
Element: Linear			
PI	122+89.87	244721.48	64395.03
POE	127+88.03	245030.15	64786.04
Tangent Direction:	N 51^42'44" E		
Tangent Length:	498.17		

SH 350 ROADWAY and DETOUR TYPICAL SECTIONS

LEGEND	
P.G.L.	~ Profile Grade Line
H.M.A.	~ Hot Mix Asphalt
P.O.S.S.	~ Point of Slope Selection
ϕ	~ Minimum 4" Topsoil or Specified Alternative

TYPICAL SECTION - SH 350 ROADWAY APPROACH TO STR. O-19-R

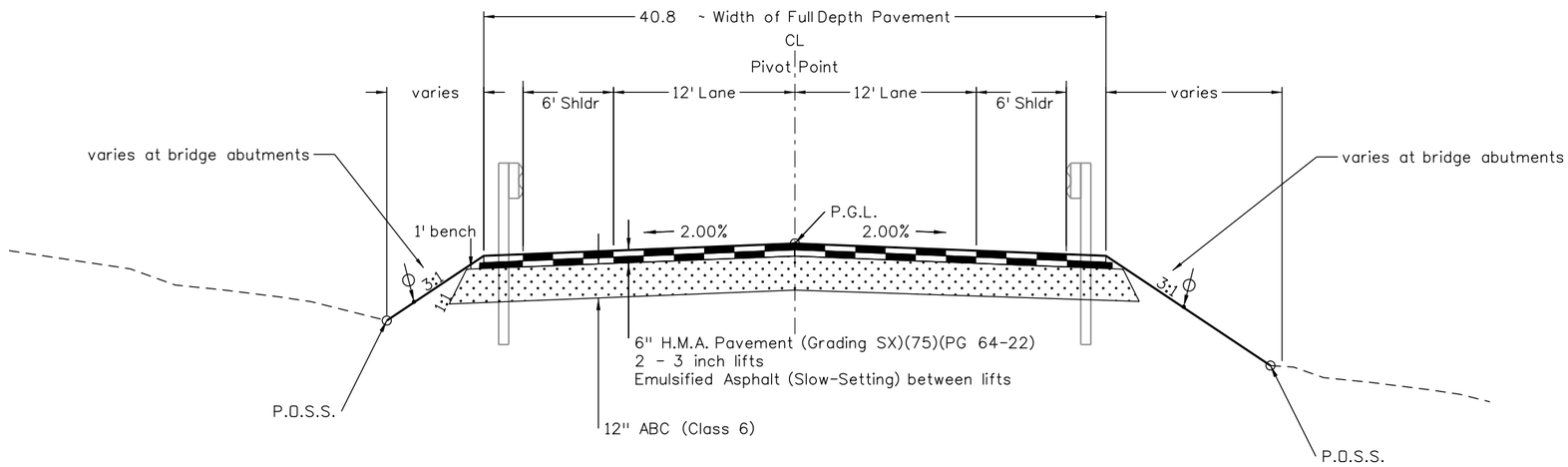

SH 350 - FINAL ROADWAY PAVEMENT DESIGN DATA	
Design Life	20 years
18-kip Design ESAL's	474,990
Reliability Level	90%
Serviceability Index	2.5
Overall Standard Deviation	0.44
Subgrade Resilient Modulus	4,781 psi (R-value = 19)
Effective Structural Number	3.52 (Component Analysis)
Calculated Structural Number	4.44 (6" HMA & 12" ABC Class 6)

NOTE:
SAFETY EDGE REQUIRED AT ALL LOCATIONS NOT PROTECTED BY GUARDRAIL
- included in cost of HMA unit price

TYPICAL SECTION - SH 350 DETOUR AROUND STR. O-19-H

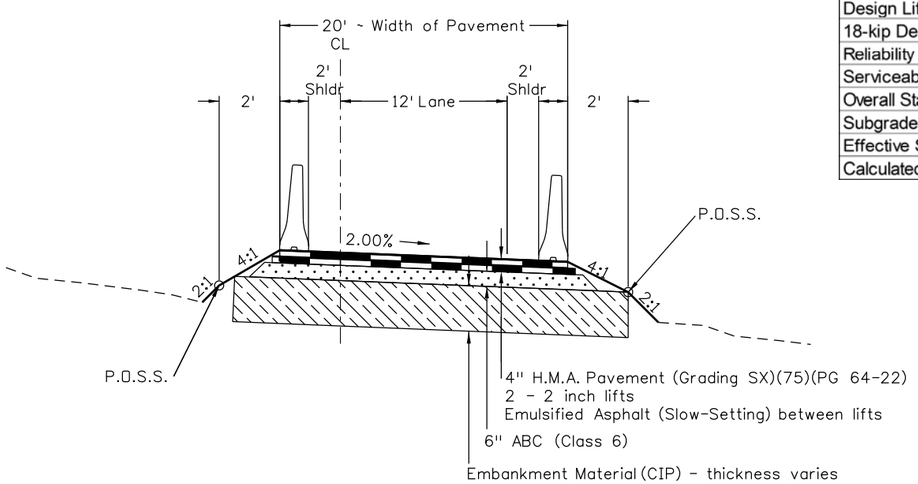

SH 350 - TEMPORARY DETOUR PAVEMENT DESIGN DATA	
Design Life	6 Months
18-kip Design ESAL's	18,000
Reliability Level	80%
Serviceability Index	2.5
Overall Standard Deviation	0.44
Subgrade Resilient Modulus	3,562 psi (R-value = 10)
Effective Structural Number	2.18 (Component Analysis)
Calculated Structural Number	2.66 (4" HMA & 6" ABC Class 6)

NOTE:
DETOUR IS ONE-LANE SIGNAL-CONTROLLED

SOIL BINDER REQUIRED ON ALL DETOUR SLOPES

TYPICAL SECTION - SH 350 DETOUR at WETLAND CROSSING
approx. STA 113+50 to STA 115+50

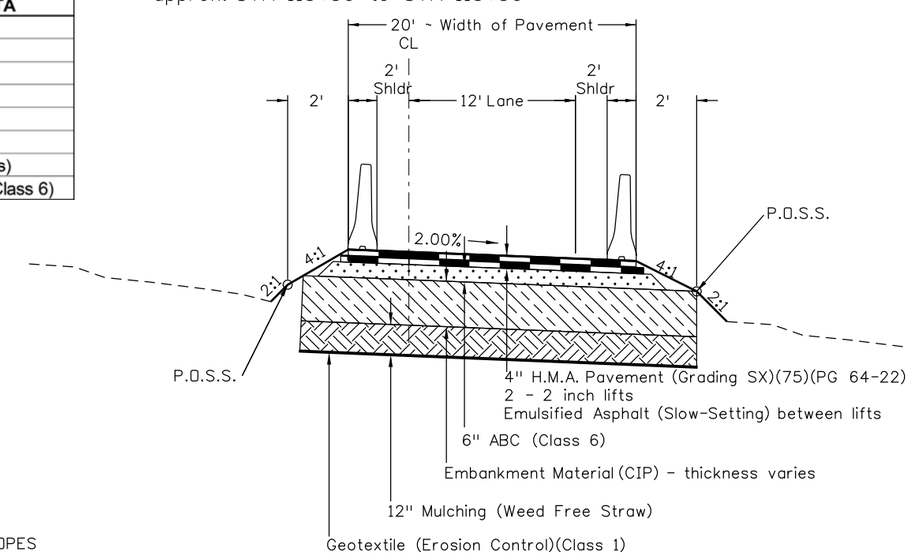

Print Date: 1/25/2013	Sheet Revisions			
File Name: 18208DES_TypISect_FINAL.dgn	Date:	Comments	Init.	
Horiz. Scale: 1:10 Vert. Scale: As Noted				
Unit Information Unit Leader Initials				

Colorado Department of Transportation
902 Erie Avenue
Pueblo, CO 81001
Phone: 719-546-5439 FAX: 719-546-5702
Region 2 JDH

As Constructed
No Revisions:
Revised:
Void:

350 ROADWAY and DETOUR TYPICAL SECTIONS

Designer:	jlb	Structure Numbers	O-19-R
Detailer:	jlb		
Sheet Subset:	TYP SEC	Subset Sheets:	1 of 1

Project No./Code
FBR 3501-013
18208
Sheet Number 4

billingsj 11:34:27 AM c:\projectwise\pwz_working\d0224696\18208DES_TypISect_FINAL.dgn

GENERAL NOTES

1. For preliminary plan quantities of pavement materials, the following rates of application were used:
   HMA (Grading SX)(75)(PG 64-22).....@ 110 Lbs./Sq. Yd./Inch
   Tack Coat - Emulsified Asphalt (Slow-Setting).....@ 0.1 Gals./Sq. Yd.(Diluted)
   Epoxy Pavement Marking.....@ 105 SF/Gal
   Aggregate Base Course Class-(Class 6).....@ 142 Lbs./Cu. Ft.

2. Water shall be used as a dust palliative where required as directed by the Engineer. The cost of water will not be paid for separately, but shall be included in the work.

3. It is estimated that 50 tons of Hot Mix Asphalt Pavement (Patching)(Ashpalt) will be required on this project as directed by the Project Engineer.

4. The following shall be furnished with each bituminous paver:
   A ski type device at least 30 Feet in length.
   Short ski or shoe.

5. Prior to placing bituminous pavement, the paved surface shall be swept and cleaned. This will not be paid for separately, but shall be included in the cost of the Hot Mix Asphalt Pavement item.

6. Where new pavement is to abut existing pavement the existing pavement shall be removed to a neat vertical line using a cutting saw or other method as approved by the Project Engineer. Saw cutting asphalt will not be paid for separately, but shall be included in the cost of the project.

7. All travel lanes are subject to smoothness incentive/disincentive payments. Pavement smoothness incentive/disincentive shall be based on Inches/Mile for HRI Category 2.

8. Millings generated by the Project shall become property of the Contractor.

9. Excavation required for compaction of bases of cuts and fills will be considered as subsidiary to that operation and will not be paid for separately.

10. Depth of moisture-density control for this project shall be as follows:
    Full depth of all embankments:
    Bases of cuts and fills 0.5 Feet.

11. All material generated within the project limits shall be removed from the project site at no cost to the project unless specified in the plans. The Contractor shall not park any vehicles or equipment in, or disturb any areas not approved by the Project Engineer.

12. Removal of guardrail, posts, and blocks shall be unbolted and uncut. All removed rail, posts and blocks shall remain property of the Department and shall be salvaged and stockpiled on site.

13. Severity of sulfate exposure shall be Class 2 (no greater than 2.00 percent). The Contractor may, at the Contractor's own expense, have a certified laboratory test the subgrade per the Field Materials Manual. Testing shall be at the same schedule and frequency as required for a preliminary soil survey. The Contractor may propose a different class of sulfate exposure for the project based on those test results.

14. A pavement marking plan shall be submitted by the Contractor prior to removal of any existing pavement markings, removal of asphalt mat, or HMA paving, per subsection 627.03a of the Standard Specifications. All new pavement markings shall match the existing markings unless otherwise approved.

15. It is estimated that 50 hours of Blading will be required for roadway work as directed by the Project Engineer.

16. It is estimated that 1.5 acres of Clearing and Grubbing will be required on this project.

17. It is estimated that the following fence quantities will be required on this project as directed by the Project Engineer:
    550 linear feet of Removal of Fence
    8 each of End Post
    8 each of Corner and Line Brace Post
    905 linear feet of Fence Barbed Wire with Metal Posts
    625 linear feet of Fence (Temporary)

18. All costs to construct and remove the temporary one-lane, on-site detour will be paid for as 1 Lump Sum. A tabulation of approximate quantities needed to construct the detour is included in the plans for information only. The temporary traffic signals needed to maintain traffic will be paid for separately.

19. It is estimated that 1 each Field Office (Class 2) and 1 each Field Laboratory (Class 2) will be required on this project. It is estimated that 2 each Sanitary Facility will be required on this project. Maintenance of the Sanitary Facilities shall include a cleaning at least twice per week. This work shall be included in the cost of the Sanitary Facility item.

20. Prior to work occurring within the Purgatoire River, the Contractor shall notify the Project Engineer so CDOT Environmental can survey the impacted river segment for leopard frog eggs. If any eggs are found, CDOT Environmental will move the egg mass upstream of the project site.

21. Colorado Parks and Wildlife indicated that black bears have been a problem in this project area. The Contractor is required to keep the site clean and ensure that all food is disposed of off site and other attractants are managed in order to minimize conflicts with black bears.

22. The utility locations shown on the plans were obtained from the best available data at the time of the survey. The Contractor shall pothole to verify location of utilities prior to excavation activities. Potholing will not be paid for separately, but shall be included in the work. The Contractor shall be responsible for contacting and coordinating with the appropriate utility representatives to be onsite during potholing and shall likewise be responsible for determining the type and location of underground utilities as maybe necessary to avoid damage thereto. The Contractor shall refer to the utility specification for additional requirements.

23. All surveying necessary to complete the project will be paid for as Construction Surveying 1 lump sum. The Contractor shall protect all existing survey monumentation designated to remain from damage during construction operations. Any monuments disturbed by the Contractor that are not designated for relocation, shall be reset at the Contractor's expense. The Contractor and the Project Engineer shall note those monuments in the field prior to construction. See Tabulation of Survey.

24. Temporary Easements have been acquired for this project. All work will be completed entirely within the easements and the existing CDOT Right-Of-Way.

25. The Contractor shall be responsible for obtaining and maintaining a construction staging area.

26. It is estimated that 1 lump sum Public Information Services will be required on this project.

27. This project is considered significant.

INDEX			CONTRACT ITEM NO.	CONTRACT ITEM	UNIT	ROADWAY										STRUCTURES								PROJECT TOTALS	
BOOK	PAGE	SHEET				PLAN	AS CONST.									PLAN	AS CONST.							PLAN	AS CONST.
			201-00001	Clearing and Grubbing	ACRE	1.5																		1.5	
			202-00010	Removal of Tree	EACH	24																		24	
			202-00090	Removal of Delineator	EACH	23																		23	
			202-00240	Removal of Asphalt Mat (Planing)	SY	716																		716	
			202-00400	Removal of Bridge	EACH											1								1	
			202-00810	Removal of Ground Sign	EACH	2																		2	
			202-01000	Removal of Fence	LF	550																		550	
			202-01130	Removal of Guardrail Type 3	LF	665																		665	
			203-00010	Unclassified Excavation (Complete In Place)	CY	3,725																		3,725	
			203-01500	Blading	HOUR	50																		50	
			206-00000	Structure Excavation	CY											851								851	
			206-00100	Structure Backfill (Class 1)	CY											422								422	
			206-00200	Structure Backfill (Class 2)	CY											262								262	
			206-00360	Mechanical Reinforcement of Soil	CY											422								422	
			207-00205	Topsoil	CY	333																		333	
			207-00310	Stockpile Wetland Topsoil	CY	60																		60	
			208-00002	Erosion Log (12 Inch)	LF	300																		300	
			208-00011	Erosion Bales (Weed Free)	EACH	25																		25	
			208-00020	Silt Fence	LF	2,250																		2,250	
			208-00034	Gravel Bag	LF	50																		50	
			208-00045	Concrete Washout Structure	EACH	1																		1	
			208-00070	Vehicle Tracking Pad	EACH	4																		4	
			208-00103	Removal and Disposal of Sediment (Labor)	HOUR	20																		20	
			208-00105	Removal and Disposal of Sediment (Equipment)	HOUR	20																		20	
			208-00106	Sweeping (Sediment Removal)	HOUR	120																		120	
			208-00107	Removal of Trash	HOUR	120																		120	
			208-00206	Erosion Control Supervisor	DAY	120																		120	
			212-00006	Seeding (Native)	ACRE	2																		2	
			212-00032	Soil Conditioning	ACRE	2																		2	
			213-00002	Mulching (Weed Free Hay)	ACRE	2																		2	
			214-00215	Deciduous Tree (1.5 Inch Caliper) (Cottonwood Tree)(Populus deltoides)	EACH	24																		24	
			214-01010	Brush Layer Cutting	EACH	365																		365	

Print Date: 2/1/2013
File Name: 18208DES_SAQ01.dgn
Horiz. Scale: 1:200 Vert. Scale: As Noted
Unit Information Unit Leader Initials

Sheet Revisions

Date:	Comments	Init.

Colorado Department of Transportation
DOT DEPARTMENT OF TRANSPORTATION
902 Erie Avenue
Pueblo, CO 81001
Phone: 719-546-5439 FAX: 719-546-5702
Region 2 JDH

As Constructed
No Revisions:
Revised:
Void:

SUMMARY OF APPROXIMATE QUANTITIES

Designer: jlb
Detailer: jlb
Sheet Subset: SAQ
Structure Numbers: O-19-R
Subset Sheets: 1 of 4

Project No./Code
FBR 3501-013
18208
Sheet Number 6

INDEX			CONTRACT ITEM NO.	CONTRACT ITEM	UNIT	ROADWAY										STRUCTURES								PROJECT TOTALS	
BOOK	PAGE	SHEET				PLAN	AS CONST.									PLAN	AS CONST.							PLAN	AS CONST.
			216-00201	Soil Retention Blanket (Straw-Coconut) (Biodegradable Class 1)	SY	1,525																		1,525	
			304-06000	Aggregate Base Course (Class 6)	TON	1,716																		1,716	
			403-00720	Hot Mix Asphalt (Patching) (Asphalt)	TON	50																		50	
			403-34741	Hot Mix Asphalt (Grading SX) (75) (PG 64-22)	TON	926.63										191								1,117.63	
			411-10255	Emulsified Asphalt (Slow-Setting)	GAL	122																		122	
			420-00112	Geotextile (Drainage) (Class 1)	SY	1,188																		1,188	
			502-00100	Drilling Hole to Facilitate Pile Driving	LF											150								150	
			502-00460	Pile Tip	EACH											20								20	
			502-11274	Steel Piling (HP 12x74)	LF											559								559	
			503-00042	Drilled Caisson (42 Inch)	LF											195								195	
			506-00209	Riprap (9 Inch)	CY	792																		792	
			507-00400	Bituminous Slope and Ditch Paving (Asphalt)	TON	20																		20	
			515-00120	Waterproofing (Membrane)	SY											1,177								1,177	
			518-01004	Bridge Expansion Device (0-4 Inch)	LF											75								75	
			601-03040	Concrete Class D (Bridge)	CY											555								555	
			602-00020	Reinforcing Steel (Epoxy Coated)	LB											117,655								117,655	
			606-00301	Guardrail Type 3 (6-3 Post Spacing)	LF	400																		400	
			606-01370	Transition Type 3G	EACH	4																		4	
			606-01385	Transition Type 3J	EACH	2																		2	
			606-01390	End Anchorage Type 3K	EACH	2																		2	
			606-02003	End Anchorage (Nonflared)	EACH	2																		2	
			606-11030	Bridge Rail Type 10M	LF											607								607	
			607-00005	End Post	EACH	8																		8	
			607-00010	Corner and Line Brace Post	EACH	8																		8	
			607-01000	Fence Barbed Wire with Metal Posts	LF	905																		905	
			607-11525	Fence (Plastic)	LF	100																		100	
			607-11580	Fence (Temporary)	LF	625																		625	
			609-60011	Curb Type 6 (Section M)	LF	200																		200	
			612-00001	Delineator (Type I)	EACH	12																		12	
			612-00003	Delineator (Type III)	EACH	12																		12	
			613-01300	3 Inch Electrical Conduit (Plastic)	LF	3,633																		3,633	
			613-07023	Pull Box (24"x36"x24")	EACH	4																		4	

Print Date: 2/1/2013
File Name: 18208DES_SAQ02.dgn
Horiz. Scale: 1:200 Vert. Scale: As Noted
Unit Information Unit Leader Initials

Sheet Revisions

Date:	Comments	Init.

Colorado Department of Transportation
DOT DEPARTMENT OF TRANSPORTATION
902 Erie Avenue
Pueblo, CO 81001
Phone: 719-546-5439 FAX: 719-546-5702
Region 2 JDH

As Constructed
No Revisions:
Revised:
Void:

SUMMARY OF APPROXIMATE QUANTITIES

Designer: jlb
Detailer: jlb
Sheet Subset: SAQ
Structure Numbers: 0-19-R
Subset Sheets: 2 of 4

Project No./Code
FBR 3501-013
18208
Sheet Number 7

INDEX BOOK	INDEX PAGE	INDEX SHEET	CONTRACT ITEM NO.	CONTRACT ITEM	UNIT	ROADWAY PLAN	ROADWAY AS CONST.	STRUCTURES PLAN	STRUCTURES AS CONST.	PROJECT TOTALS PLAN	PROJECT TOTALS AS CONST.
			614-00011	Sign Panel (Class I)	SF	3				3	
			614-00012	Sign Panel (Class II)	SF	11				11	
			614-01503	Steel Sign Support (2-Inch Round)(Post and Socket)	EACH	2				2	
			614-01573	Steel Sign Support (2-1/2 Inch Round NP-40)(Post & Slipbase)	EACH	2				2	
			615-00050	Embankment Protector Type 5	EACH	4				4	
			618-01994	Prestressed Concrete Box (Depth 32" Through 48")	SF			9,057		9,057	
			620-00002	Field Office (Class 2)	EACH	1				1	
			620-00012	Field Laboratory (Class 2)	EACH	1				1	
			620-00020	Sanitary Facility	EACH	2				2	
			621-00425	Detour	L S	1				1	
			625-00000	Construction Surveying	L S	1				1	
			626-00000	Mobilization	L S	1				1	
			626-01000	Public Information Services	L S	1				1	
			627-00005	Epoxy Pavement Marking	GAL	17				17	
			630-00000	Flagging	HOUR	700				700	
			630-00007	Traffic Control Inspection	DAY	150				150	
			630-00012	Traffic Control Management	DAY	35				35	
			630-80001	Flashing Beacon (Portable)	EACH	10				10	
			630-80338	Barricade (Type 3 M-D) (Temporary)	EACH	2				2	
			630-80341	Construction Traffic Sign (Panel Size A)	EACH	22				22	
			630-80342	Construction Traffic Sign (Panel Size B)	EACH	28				28	
			630-80343	Construction Traffic Sign (Panel Size C)	EACH	22				22	
			630-80344	Construction Traffic Sign (Special)	SF	106				106	
			630-80355	Portable Message Sign Panel	EACH	4				4	
			630-80358	Advance Warning Flashing or Sequencing Arrow Panel (C Type)	EACH	2				2	
			630-80360	Drum Channelizing Device	EACH	100				100	
			630-80380	Traffic Cone	EACH	200				200	
			630-86810	Traffic Signal (Temporary)	EACH	1				1	
				FORCE ACCOUNT ==========							
			700-70010	F/A Minor Contract Revisions	F A	1				1	
			700-70011	F/A Partnering	F A	1				1	
			700-70016	F/A Fuel Cost Adjustment	F A	1				1	

Print Date: 2/1/2013
File Name: 18208DES_SAQ03.dgn
Horiz. Scale: 1:200 Vert. Scale: As Noted
Unit Information Unit Leader Initials

Sheet Revisions

Date:	Comments	Init.

Colorado Department of Transportation
DOT DEPARTMENT OF TRANSPORTATION
902 Erie Avenue
Pueblo, CO 81001
Phone: 719-546-5439 FAX: 719-546-5702
Region 2 JDH

As Constructed
No Revisions:
Revised:
Void:

SUMMARY OF APPROXIMATE QUANTITIES

Designer: jlb
Detailer: jlb
Sheet Subset: SAQ
Structure Numbers: 0-19-R
Subset Sheets: 3 of 4

Project No./Code
FBR 3501-013
18208
Sheet Number 8

INDEX			CONTRACT ITEM NO.	CONTRACT ITEM	UNIT	ROADWAY										STRUCTURES								PROJECT TOTALS	
BOOK	PAGE	SHEET				PLAN	AS CONST.									PLAN	AS CONST.							PLAN	AS CONST.
			700-70018	F/A Roadway Smoothness Incentive	F A	1																		1	
			700-70019	F/A Asphalt Cement Cost Adjustment	F A	1																		1	
			700-70021	F/A On-The-Job Trainee	HOUR	640																		640	
			700-70025	F/A Quality Incentive Payment	F A	1																		1	
			700-70380	F/A Erosion Control	F A	1																		1	

Print Date: 2/1/2013
File Name: 18208DES_SAQ04.dgn
Horiz. Scale: 1:200 Vert. Scale: As Noted
Unit Information Unit Leader Initials

Sheet Revisions		
Date:	Comments	Init.

Colorado Department of Transportation
902 Erie Avenue
Pueblo, CO 81001
Phone: 719-546-5439 FAX: 719-546-5702
Region 2 JDH

As Constructed
No Revisions:
Revised:
Void:

SUMMARY OF APPROXIMATE QUANTITIES

Designer: jlb
Detailer: jlb
Sheet Subset: SAQ
Structure Numbers: 0-19-R
Subset Sheets: 4 of 4

Project No./Code
FBR 3501-013
18208
Sheet Number 9

TABULATION OF SURFACING

STATION FROM	STATION TO	SIDE	LENGTH (FEET)	AVG WIDTH (FEET)	AREA (SQ FT)	AREA (SQ YDS)	REMOVAL OF ASPHALT MAT (PLANING) (SY)	AGGREGATE BASE COURSE (CLASS 6) (TON)	HOT MIX ASPHALT (GRADING SX) (75) (PG 64-22) BOTTOM (TON)	HOT MIX ASPHALT (GRADING SX) (75) (PG 64-22) TOP (TON)	EMULSIFIED ASPHALT (SLOW-SETTING) (GAL)
							3 IN	12 IN	3 IN	3 IN	-
110+00.0	111+00.0	RT	100.0	15.0	1,500.0	166.7	167				
111+00.0	111+60.0	RT	60.0	15.0	900.0	100.0		63.90	16.50	16.50	5
111+60.0	113+26.9	RT	166.9	20.4	3,406.2	378.5		241.84	62.45	62.45	19
116+30.3	117+86.6	RT	156.3	20.4	3,189.1	354.3		226.42	58.47	58.47	18
117+86.6	120+00.0	RT	213.4	17.2	3,671.7	408.0		260.69	67.31	67.31	20
120+00.0	121+00.0	RT	100.0	17.2	1,720.5	191.2	191				
110+00.0	111+00.0	LT	100.0	15.0	1,500.0	166.7	167				
111+00.0	112+80.0	LT	180.0	15.0	2,700.0	300.0		191.70	49.50	49.50	15
112+80.0	113+17.2	LT	37.2	20.4	760.1	84.5		53.96	13.93	13.93	4
116+20.7	118+77.0	LT	256.3	20.4	5,230.1	581.1		371.33	95.88	95.88	29
118+77.0	120+00.0	LT	123.0	17.2	2,117.1	235.2		150.31	38.81	38.81	12
120+00.0	121+00.0	LT	100.0	17.2	1,720.5	191.2	191				
CR intersection	111+25	RT	25.0	50.0	1,250.0	138.9				22.92	
Residential Drive	112+80.0	LF	25.0	30.0	750.0	83.3				13.75	
10 % for irregularities								156.02	40.29	43.95	
Project Totals							**716**	**1,716**	443.15	483.48	**122**
									926.63		

TABULATION OF PAVEMENT MARKINGS

STATION FROM	STATION TO	EPOXY PAVEMENT MARKING DBL YELLOW SOLID (4 IN) (GAL)	EPOXY PAVEMENT MARKING YELLOW BROKEN (4 IN) (GAL)	EPOXY PAVEMENT MARKING WHITE SOLID (4 IN) (GAL)
110+00.0	122+00.0	8	1	8
Project Totals		**17**		

Print Date: 1/25/2013	Sheet Revisions	Colorado Department of Transportation	As Constructed	TABULATION OF SURFACING & PAVEMENT MARKINGS	Project No./Code
File Name: 18208_TAB_SHEETS.dgn	Date: / Comments / Init.	902 Erie Avenue, Pueblo, CO 81001, Phone: 719-546-5439 FAX: 719-546-5702	No Revisions:		FBR 3501-013
Horiz. Scale: 1:1 Vert. Scale: As Noted		Region 2 JDH	Revised:	Designer: jlb / Structure Numbers: na	18208
Unit Information Unit Leader Initials			Void:	Detailer: jlb / Sheet Subset: TABS / Subset Sheets: 1 of 4	Sheet Number 10

billingsj 12:03:23 PM c:\projectwise\pwz_working\d0224696\18208_TAB_SHEETS.dgn

TABULATION OF GUARDRAIL

STATION FROM	STATION TO	SIDE	REMOVAL OF GUARDRAIL TYPE 3 (LIN FT)	GUARDRAIL TYPE 3(6-3 POST SPACING) (LIN FT)	TRANSITION TYPE 3G (EA)	TRANSITION TYPE 3J (EA)	END ANCHORAGE TYPE 3K (EA)	END ANCHORAGE (NONFLARED) (EA)	REMARKS
111+62.1	111+65.3	RT					1		
111+65.3	111+83.1	RT				1			
111+83.1	113+08.1	RT		125.0					
113+08.1	113+26.9	RT			1				
111+69.9	112+57.9	RT	88						
113+10.7	113+28.6	RT	18						
116+30.3	116+49.1	RT			1				
116+49.1	117+36.6	RT		87.5					
117+36.6	117+86.6	RT						1	
115+59.5	117+97.0	RT	238						
112+83.5	112+83.5	LT					1		
112+83.5	112+98.5	LT				1			
112+98.5	113+17.2	LT			1				
111+56.3	112+44.2	LT	88						
112+90.1	113+48.9	LT	59						
116+20.7	116+39.5	LT			1				
116+39.5	118+27.0	LT		187.5					
118+27.0	118+77.0	LT						1	
115+39.5	117+13.9	LT	174						
Project Totals			**665**	**400**	**4**	**2**	**2**	**2**	

W-beam rail and steel posts shall be galvanized.
Blocks shall be notched rail from synthetic material.

TABULATION OF DRAINAGE ITEMS

STATION	SIDE	GEOTEXTILE (DRAINAGE) (CLASS 1) (SY)	RIPRAP (9 INCH) (CY)	BITUMINOUS SLOPE AND DITCH PAVING (ASPHALT) (TON)	CURB TYPE 6 (SECTION M) (LF)	EMBANKMENT PROTECTOR TYPE 5 (EA)
113+20	RT	297	198	5	50	1
116+35	RT	297	198	5	50	1
113+12	LT	297	198	5	50	1
116+25	LT	297	198	5	50	1
Project Totals		**1188**	**792**	**20**	**200**	**4**

TABULATION OF CONDUIT

STATION FROM	STATION TO	SIDE	3 INCH ELECTRICAL CONDUIT (PLASTIC) (LIN FT)	PULL BOX (24"x36"x24") (EA)
111+70		RT		1
111+70	117+90	RT	1,860	
117+90		RT		1
112+89		LT		1
112+89	118+80	LT	1,773	
118+80		LT		1
Project Totals			**3,633**	**4**

Print Date: 2/8/2013	Sheet Revisions	Colorado Department of Transportation	As Constructed
File Name: 18208_TAB_SHEETS.dgn	Date: / Comments / Init.	902 Erie Avenue, Pueblo, CO 81001, Phone: 719-546-5439 FAX: 719-546-5702	No Revisions:
Horiz. Scale: 1:1 Vert. Scale: As Noted		Region 2 JDH	Revised:
Unit Information Unit Leader Initials			Void:

TABULATION OF GUARDRAIL, DRAINAGE ITEMS & CONDUIT

Designer:	jlb	Structure Numbers	na
Detailer:	jlb		
Sheet Subset:	TABS	Subset Sheets:	2 of 4

Project No./Code
FBR 3501-013
18208
Sheet Number 11

TABULATION OF SIGNS

STATION	SIDE	SIGN	PANEL SIZE (IN) W x H	BACKGROUND COLOR	LEGEND	REMOVAL OF GROUND SIGN (EA)	SIGN PANEL (CLASS I) (SF)	SIGN PANEL (CLASS II) (SF)	STEEL SIGN SUPPORT (2 INCH ROUND) (POST AND SOCKET) (EA)	STEEL SIGN SUPPORT (2-1/2 INCH ROUND NP-40) (POST & SLIPBASE) (EA)
113+10	RT	Special	42 x 18	GREEN	Purgatoire River			5.25		1
113+27	RT	StrID	12 x 18	WHITE	O-19-R 6.64		1.5		1	
113+58	RT	Special	remove	GREEN	Purgatoire River	1				
115+30	LT	Special	remove	GREEN	Purgatoire River	1				
116+20	LT	StrID	12 x 18	WHITE	O-19-R 6.64		1.5		1	
116+33	LT	Special	42 x 18	GREEN	Purgatoire River			5.25		1
Project Totals						**2**	**3**	**11**	**2**	**2**

TABULATION OF DELINEATORS

REMOVAL OF DELINEATOR	DELINEATOR (TYPE I)	DELINEATOR (TYPE III)		
	CRYSTAL	YELLOW	GREEN	BLUE
(EA)	(EA)	(EA)	(EA)	(EA)
23	**12**	4	4	4
		12		

TABULATION OF DETOUR ITEMS

FOR INFORMATION ONLY

ITEM	DESCRIPTION	UNIT	QUANTITY
202	REMOVAL OF STRUCTURE (SPECIAL)	(EA)	1
203	EMBANKMENT MATERIAL (CIP)	(CY)	7,200
206	SHORING (AREA 1)	(LS)	1
213	MULCHING (WEED FREE STRAW)	(AC)	2.0
213	SOIL BINDER	(AC)	2.0
304	AGGREGATE BASE COURSE (CLASS 6)	(TON)	650
403	HOT MIX ASPHALT	(TON)	450
411	EMULSIFIED ASPHALT (SLOW-SETTING)	(GAL)	200
420	GEOTEXTILE (EROSION CONTROL)(CLASS 1)	(SY)	1,650
506	RIPRAP (9 INCH)	(CY)	330
519	PAVEMENT MARKING PAINT	(GAL)	7
624	DETOUR DRAINAGE PIPE (96 IN)	(LF)	498
630	CONCRETE BARRIER (TEMPORARY)	(LF)	1,600
630	IMPACT ATTENUATOR (TEMPORARY)	(EA)	2

The Tabulation of Detour Items is for information only.
See the General Notes Sheet for the Detour pay item.

TABULATION OF TRAFFIC CONTROL SIGNS

SIGN CODE	LEGEND	DIMENSIONS	CONSTRUCTION TRAFFIC SIGN (PANEL SIZE A) 630-80341 EA	(PANEL SIZE B) 630-80342 EA	(PANEL SIZE C) 630-80343 EA	(SPECIAL) 630-80344 SF
G20-11	PROJECT INFORMATION SIGN	48 x 60			2	
48W20-1	ROAD/WORK/(1 MILE)	48 x 48		2		
48W20-1	ROAD/WORK/(XX FT)	48 x 48		2		
48R52-6a	BEGIN/FINES/DOUBLE...	48 x 60			2	
48W3-3	STOP LIGHT SYMBOL	48 x 48		2		
48W3-3	STOP HERE ON RED	48 x 36		2		
48W20-5( )	( ) LANE CLOSED (DIST)	48 x 48		4		
48W20-7a	FLAGGER SYMBOL	48 x 48		2		
48W20-7b	BE/PREPARED/TO/STOP	48 x 48		2		
36G20-5	WORK ZONE	24 x 12	12			
48R2-1(65)	SPEED/LIMIT/(65)	48 x 60			2	
48R2-1(50)	SPEED/LIMIT/(50)	48 x 60			2	
48R2-1(40)	SPEED/LIMIT/(40)	48 x 60			2	
36R2-6	FINES DOUBLE	36 x 36	4			
48W4-2( )	( ) LANE TRANSITION SYMBOL	48 x 48		4		
48R4-1	DO/NOT/PASS	48 x 60			2	
R11-2	ROAD CLOSED	48 x 30		2		
R4-7	KEEP RIGHT	36 x 48		2		
48R4-2	PASS/WITH/CARE	48 x 60			2	
48R52-6b	END/FINES/DOUBLE...	48 x 60			2	
48G20-10	THANK YOU/----/----	48 x 48			2	
G20-2	END ROAD WORK	36 x 18	2			
	FASTER PROJECT SIGNS	60 x 60				58
	AS DIRECTED BY ENGINEER		4	4	4	48
TOTALS			**22**	**28**	**22**	**106**

Some devices shall be equipped with FLASHING BEACON (SOLAR) - as directed by the Project Engineer

TABULATION OF TRAFFIC CONTROL DEVICES

PAY ITEM	DESCRIPTION	UNIT	QUANTITY
630-00000	FLAGGING	(HR)	**700**
630-00007	TRAFFIC CONTROL INSPECTION	(DAY)	**150**
630-00012	TRAFFIC CONTROL MANAGEMENT	(DAY)	**35**
630-80001	FLASHING BEACON (PORTABLE)	(EA)	**10**
630-80338	BARRICADE (TYPE 3 M-D)(TEMPORARY)	(EA)	**2**
630-80355	PORTABLE MESSAGE SIGN PANEL	(EA)	**4**
630-80358	ADVANCE WARNING FLASHING OR SEQUENCING ARROW PANEL (C TYPE)	(EA)	**2**
630-80360	DRUM CHANNELIZING DEVICE	(EA)	**100**
630-80380	TRAFFIC CONE	(EA)	**200**
630-86810	TRAFFIC SIGNAL (TEMPORARY)	(EA)	**1**

CONSTRUCTION TRAFFIC SIGN (SPECIAL) - FASTER PROJECT SIGNS

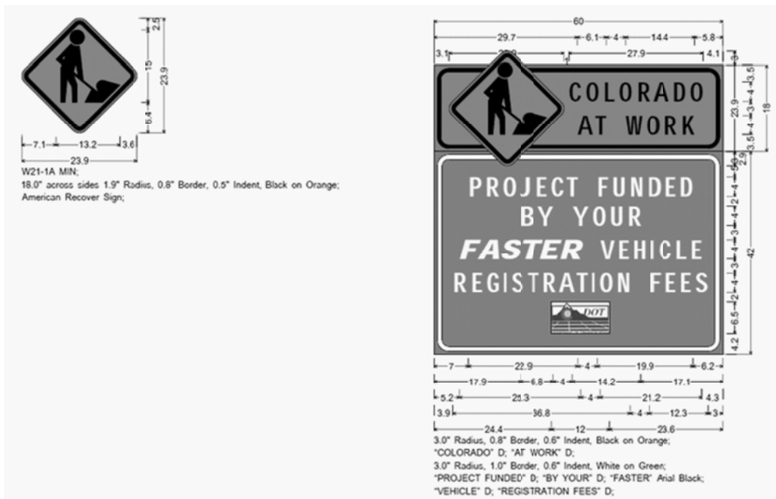

Print Date: 1/25/2013	Sheet Revisions	Colorado Department of Transportation	As Constructed
File Name: 18208_TAB_SHEETS.dgn	Date: / Comments / Init.	902 Erie Avenue, Pueblo, CO 81001, Phone: 719-546-5439 FAX: 719-546-5702	No Revisions:
Horiz. Scale: 1:1 Vert. Scale: As Noted		Region 2 JDH	Revised:
Unit Information Unit Leader Initials			Void:

TABULATION OF TRAFFIC CONTROL SIGNS & DEVICES				Project No./Code
Designer: jlb	Structure Numbers	na		FBR 3501-013
Detailer: jlb				18208
Sheet Subset: TABS	Subset Sheets:	4 of 4		Sheet Number 13

billingsj 12:11:44 PM c:\projectwise\pwz_working\d0224696\18208_TAB_SHEETS.dgn

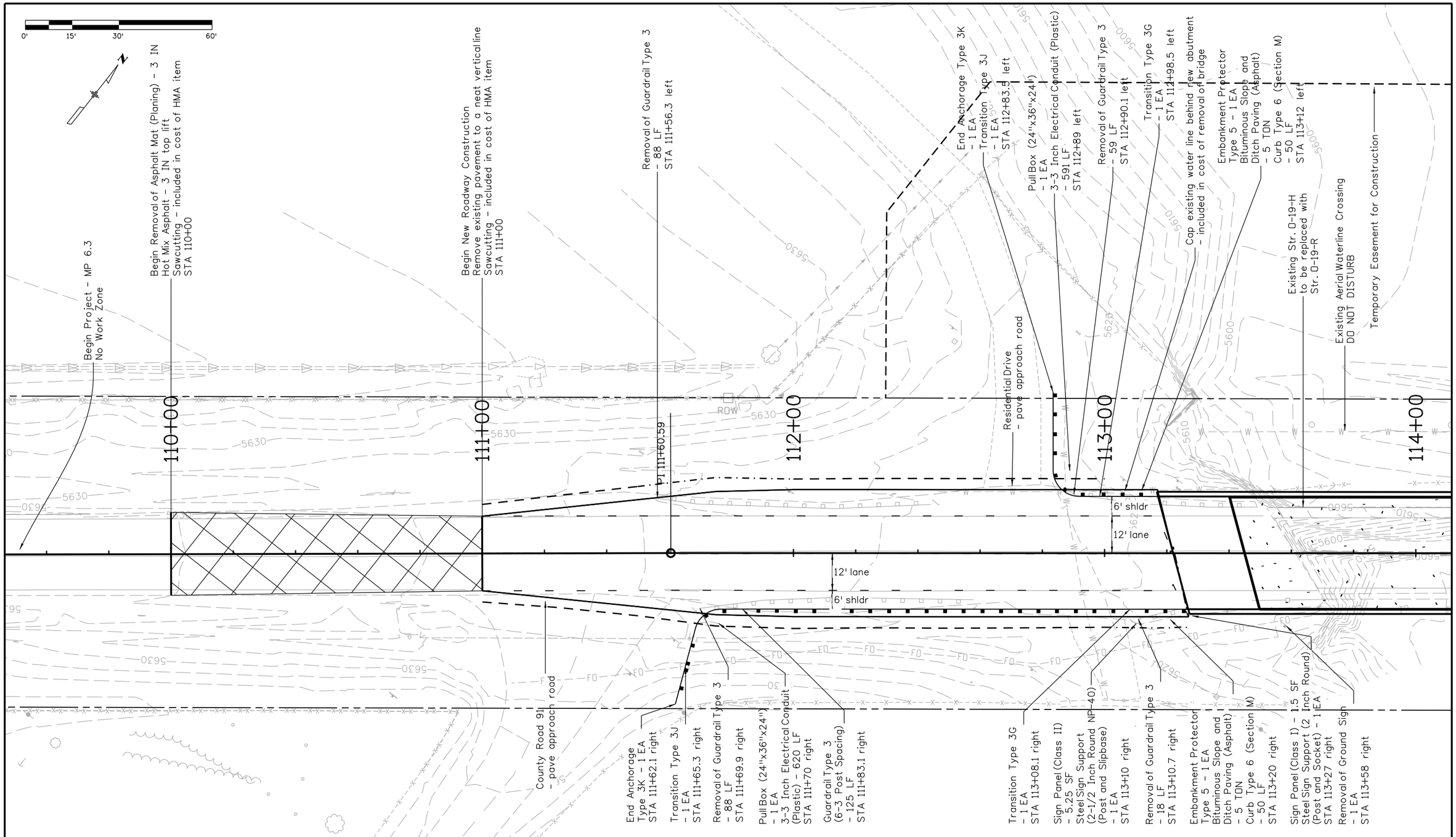

Print Date: 1/31/2013	Sheet Revisions		
File Name: 18208_DESIGN_plan.dgn	Date:	Comments	Init.
Horiz. Scale: 1:30 Vert. Scale: As Noted			
Unit Information Unit Leader Initials			

Colorado Department of Transportation
DOT
DEPARTMENT OF TRANSPORTATION
902 Erie Avenue
Pueblo, CO 81001
Phone: 719-546-5439 FAX: 719-546-5702
Region 2 JDH

As Constructed
No Revisions:
Revised:
Void:

PLAN SHEET

Designer:	jlb	Structure Numbers	D-19-R
Detailer:	jlb		
Sheet Subset:	PLAN	Subset Sheets:	1 of 3

Project No./Code
FBR 3501-013
18208
Sheet Number 14

bilingsj 11:30:26 AM c:\projectwise\pwz_working\d0224696\18208_DESIGN_plan.dgn

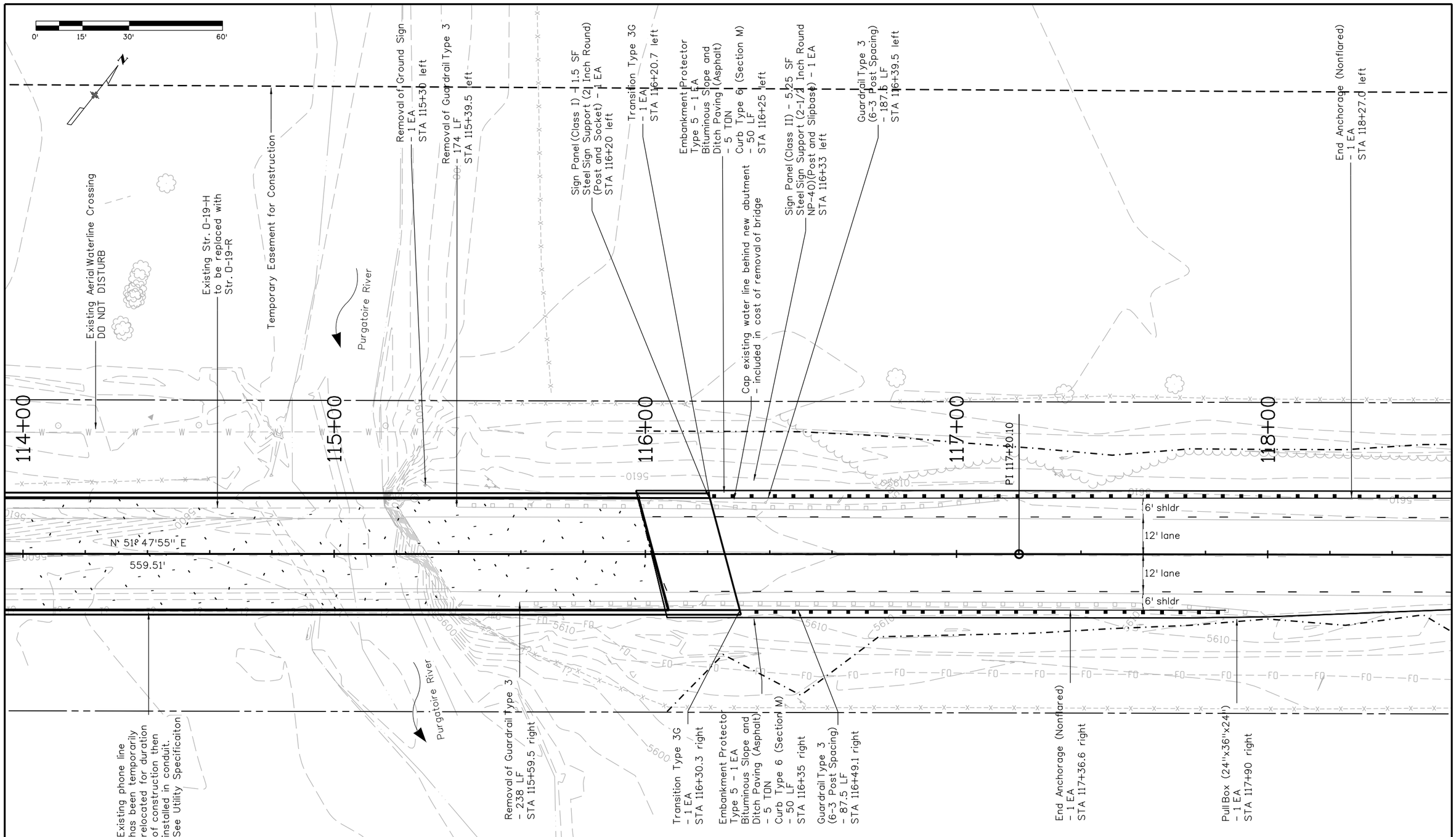

Print Date: 2/8/2013	Sheet Revisions	Colorado Department of Transportation	As Constructed
File Name: 18208_DESIGN_plan2.dgn	Date: / Comments / Init.	902 Erie Avenue, Pueblo, CO 81001	No Revisions:
Horiz. Scale: 1:30 Vert. Scale: As Noted		Phone: 719-546-5439 FAX: 719-546-5702	Revised:
Unit Information Unit Leader Initials		Region 2 JDH	Void:

PLAN SHEET			
Designer: jlb	Structure Numbers	D-19-R	
Detailer: jlb			
Sheet Subset: PLAN	Subset Sheets: 2 of 3		

Project No./Code
FBR 3501-013
18208
Sheet Number 15

billingsj 10:37:44 AM c:\projectwise\pwz_working\d0224696\18208_DESIGN_plan2.dgn

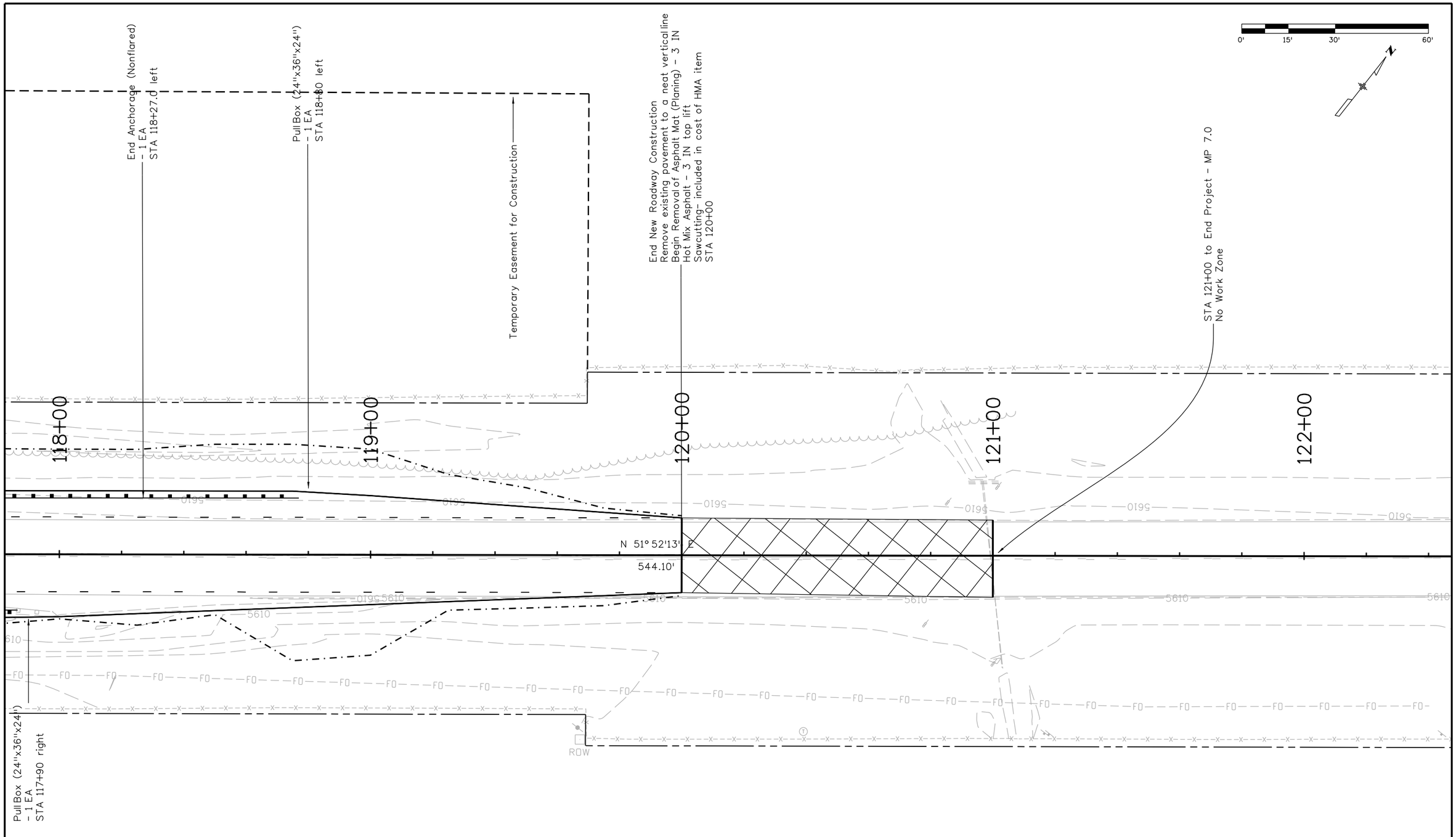

Print Date: 1/31/2013			
File Name: 18208_DESIGN_plan3.dgn			
Horiz. Scale: 1:30	Vert. Scale: As Noted		
Unit Information	Unit Leader Initials		

Sheet Revisions

Date:	Comments	Init.

Colorado Department of Transportation
DOT
DEPARTMENT OF TRANSPORTATION
902 Erie Avenue
Pueblo, CO 81001
Phone: 719-546-5439 FAX: 719-546-5702
Region 2 JDH

As Constructed	
No Revisions:	
Revised:	
Void:	

PLAN SHEET

Designer:	jlb	Structure Numbers	0-19-R
Detailer:	jlb		
Sheet Subset:	PLAN	Subset Sheets:	3 of 3

Project No./Code
FBR 3501-013
18208
Sheet Number 16

billingsj 11:34:11 AM c:\projectwise\pwz_working\d0224696\18208_DESIGN_plan3.dgn

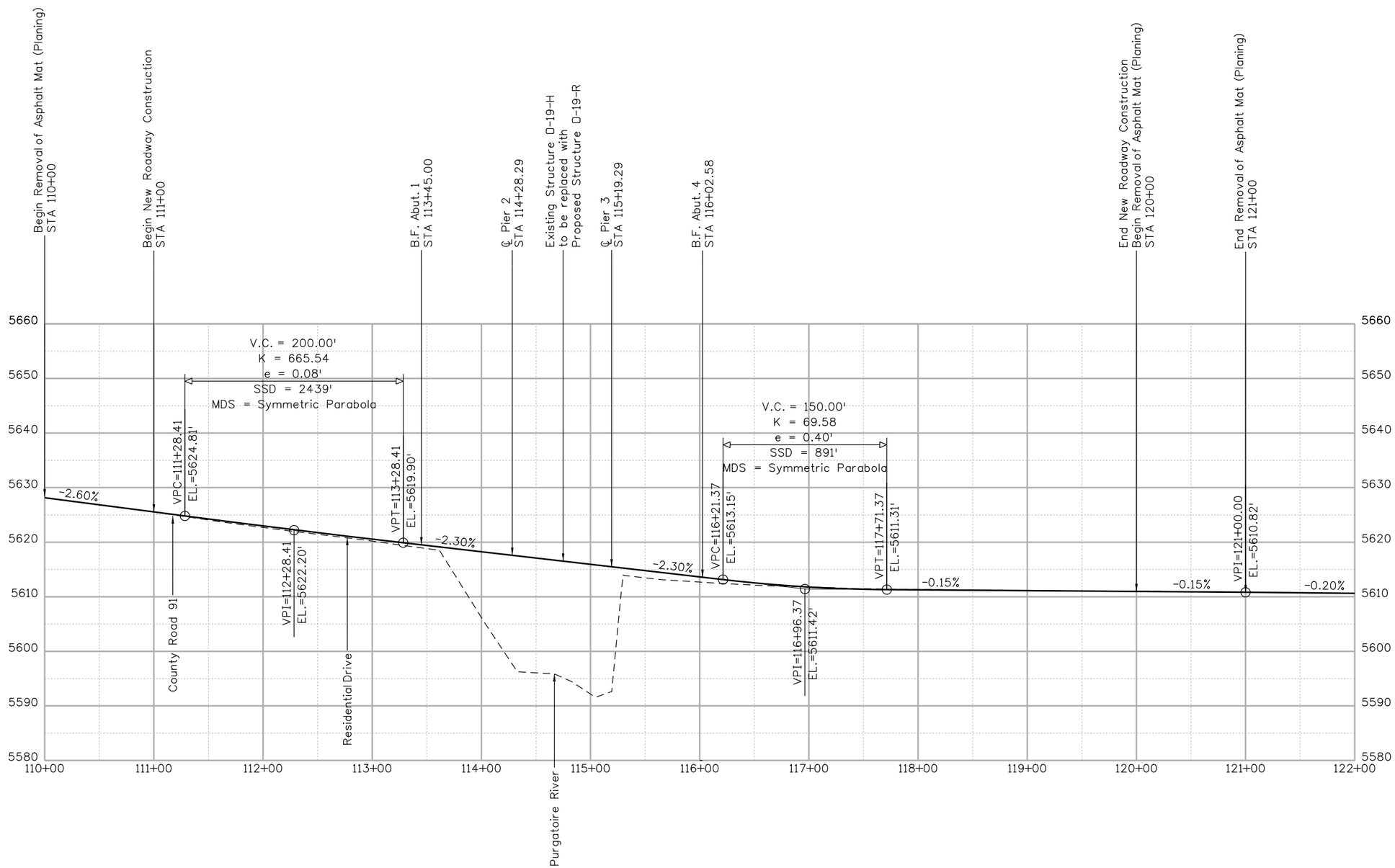

Print Date: 1/31/2013			
File Name: 18208-DESIGN-profile.dgn			
Horiz. Scale: 1:100	Vert. Scale: As Noted		
Unit Information	Unit Leader Initials		

Sheet Revisions

Date:	Comments	Init.

Colorado Department of Transportation
DOT DEPARTMENT OF TRANSPORTATION
902 Erie Avenue
Pueblo, CO 81001
Phone: 719-546-5439 FAX: 719-546-5702
Region 2 JDH

As Constructed
No Revisions:
Revised:
Void:

PROFILE SHEET

Designer:	jlb	Structure Numbers	D-19-R
Detailer:	jlb		
Sheet Subset:	PROF	Subset Sheets:	1 of 1

Project No./Code
FBR 3501-013
18208
Sheet Number 17

billingsj 11:38:45 AM c:\projectwise\pw2_working\d0224698\18208-DESIGN-profile.dgn

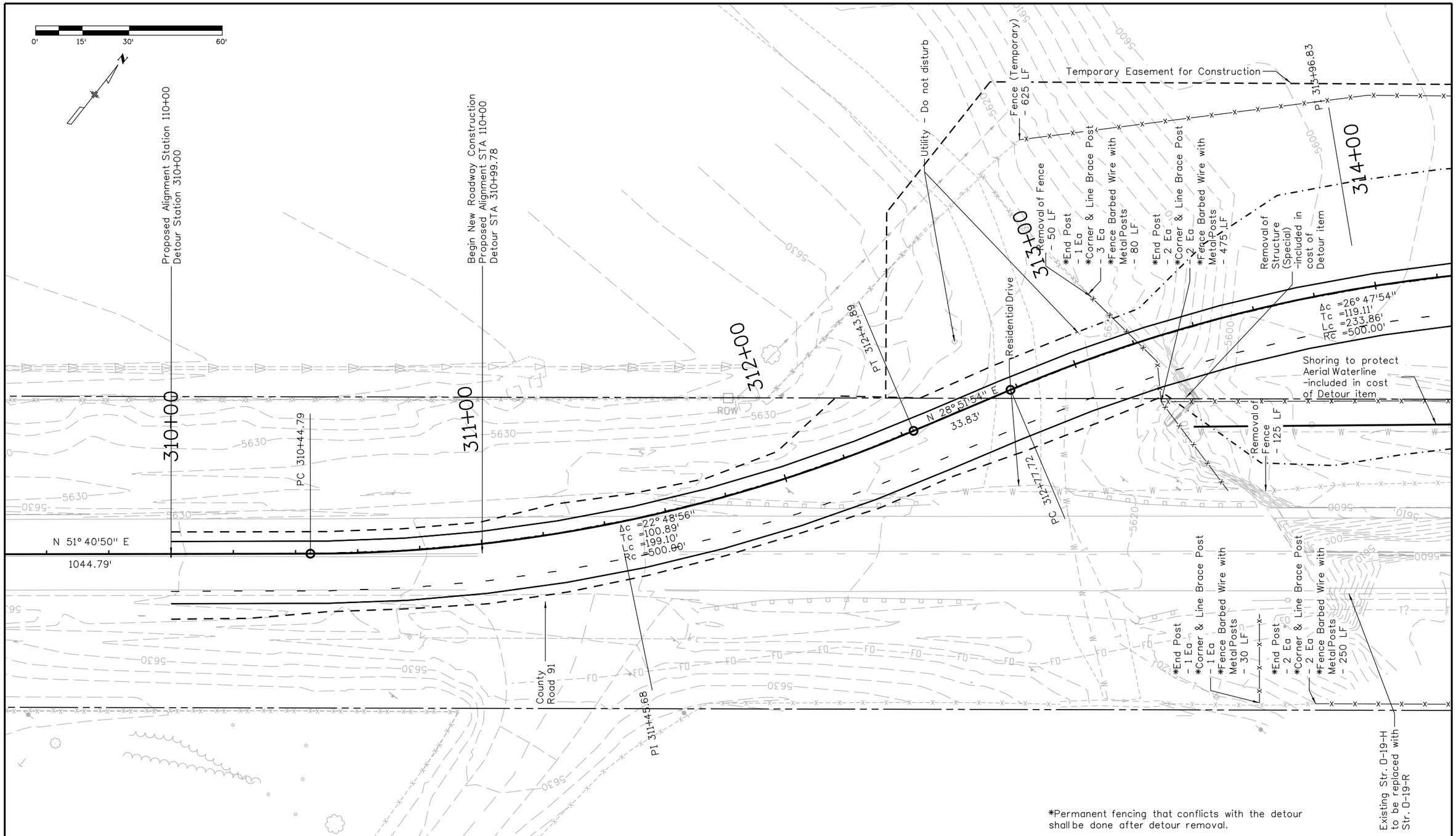

*Permanent fencing that conflicts with the detour shall be done after detour removal.

Print Date: 2/1/2013	Sheet Revisions	Colorado Department of Transportation	As Constructed
File Name: 18208_Detour_plan.dgn	Date: / Comments / Init.	902 Erie Avenue, Pueblo, CO 81001, Phone: 719-546-5439 FAX: 719-546-5702	No Revisions:
Horiz. Scale: 1:30 Vert. Scale: As Noted		Region 2 JDH	Revised:
Unit Information Unit Leader Initials			Void:

PLAN SHEET - DETOUR -				Project No./Code
Designer: jlb	Structure Numbers	O-19-R		FBR 3501-013
Detailer: jlb				18208
Sheet Subset: detourPLAN	Subset Sheets:	1 of 3		Sheet Number 18

bilingsj 10:17:48 AM c:\projectwise\pwz_working\d0224696\18208_Detour_plan.dgn

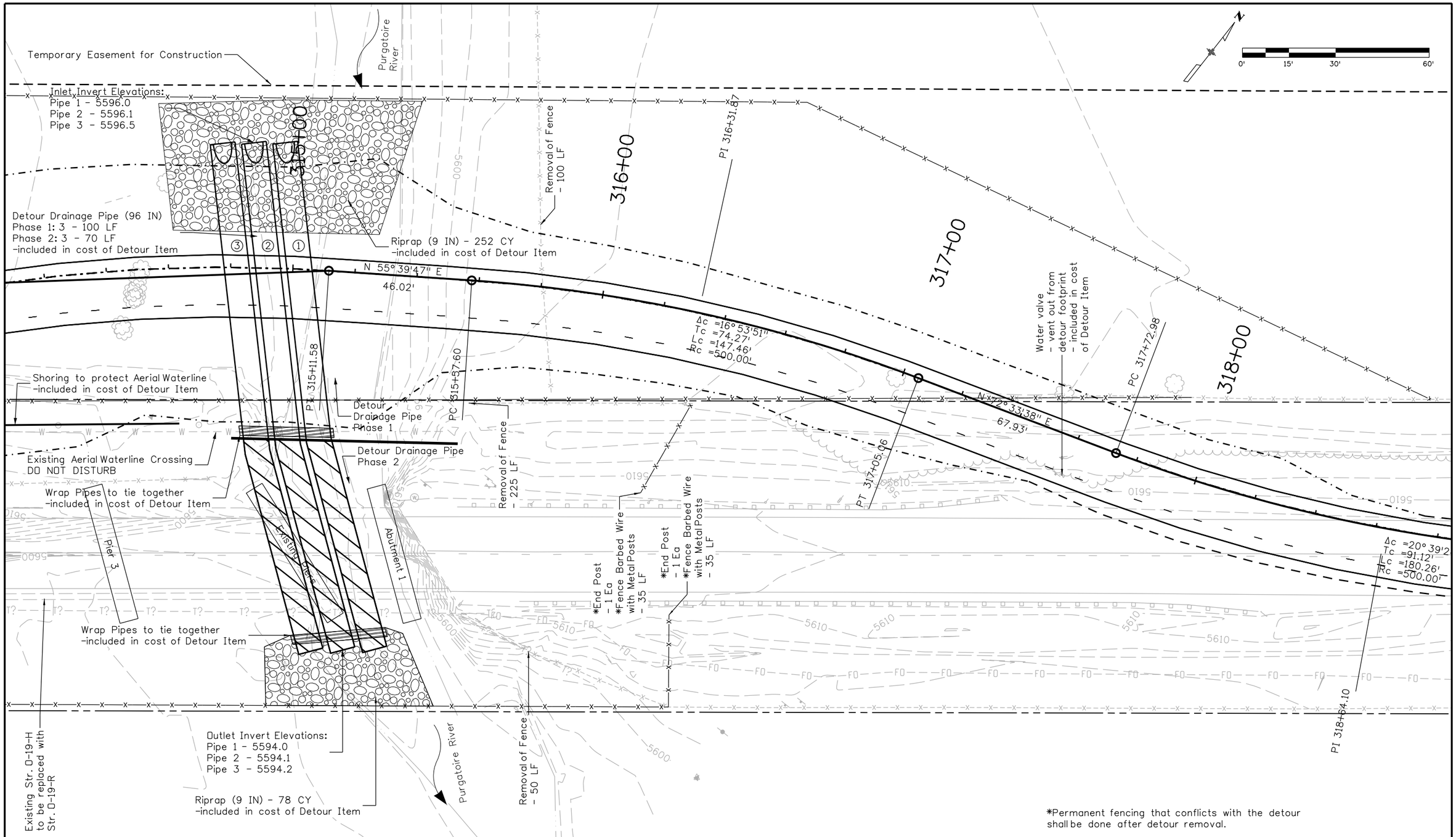

*Permanent fencing that conflicts with the detour shall be done after detour removal.

Print Date: 2/1/2013	Sheet Revisions	Colorado Department of Transportation	As Constructed
File Name: 18208_Detour_plan2.dgn	Date: / Comments / Init.	902 Erie Avenue, Pueblo, CO 81001, Phone: 719-546-5439 FAX: 719-546-5702	No Revisions:
Horiz. Scale: 1:30 Vert. Scale: As Noted		Region 2 JDH	Revised:
Unit Information Unit Leader Initials			Void:

PLAN SHEET - DETOUR -				Project No./Code
Designer: jlb	Structure Numbers	O-19-R		FBR 3501-013
Detailer: jlb				18208
Sheet Subset: detour PLAN	Subset Sheets:	2 of 3		Sheet Number 19

billingsj 10:19:37 AM c:\projectwise\pwz_working\d0224696\18208_Detour_plan2.dgn

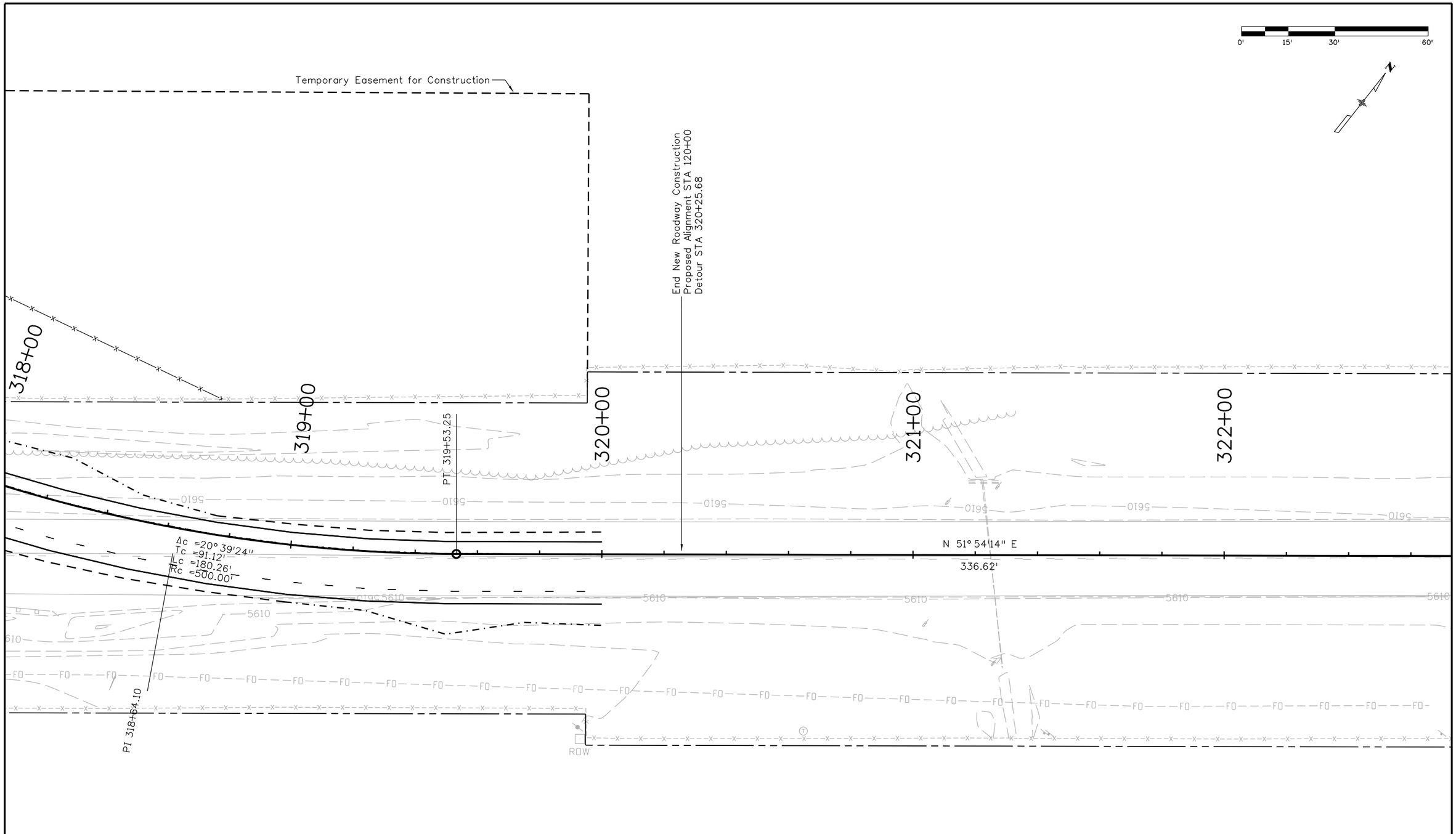

Print Date: 2/1/2013			
File Name: 18208_Detour_plan3.dgn			
Horiz. Scale: 1:30	Vert. Scale: As Noted		
Unit Information	Unit Leader Initials		

Sheet Revisions

Date:	Comments	Init.

Colorado Department of Transportation
902 Erie Avenue
Pueblo, CO 81001
Phone: 719-546-5439 FAX: 719-546-5702
Region 2 JDH

As Constructed
No Revisions:
Revised:
Void:

PLAN SHEET
- DETOUR -

Designer:	jlb	Structure Numbers	0-19-R
Detailer:	jlb		
Sheet Subset: detourPLAN		Subset Sheets:	3 of 3

Project No./Code
FBR 3501-013
18208
Sheet Number 20

billingsj10:21:35 AM c:\projectwise\pwz_working\d0224696\18208_Detour_plan3.dgn

DETOUR PROFILE

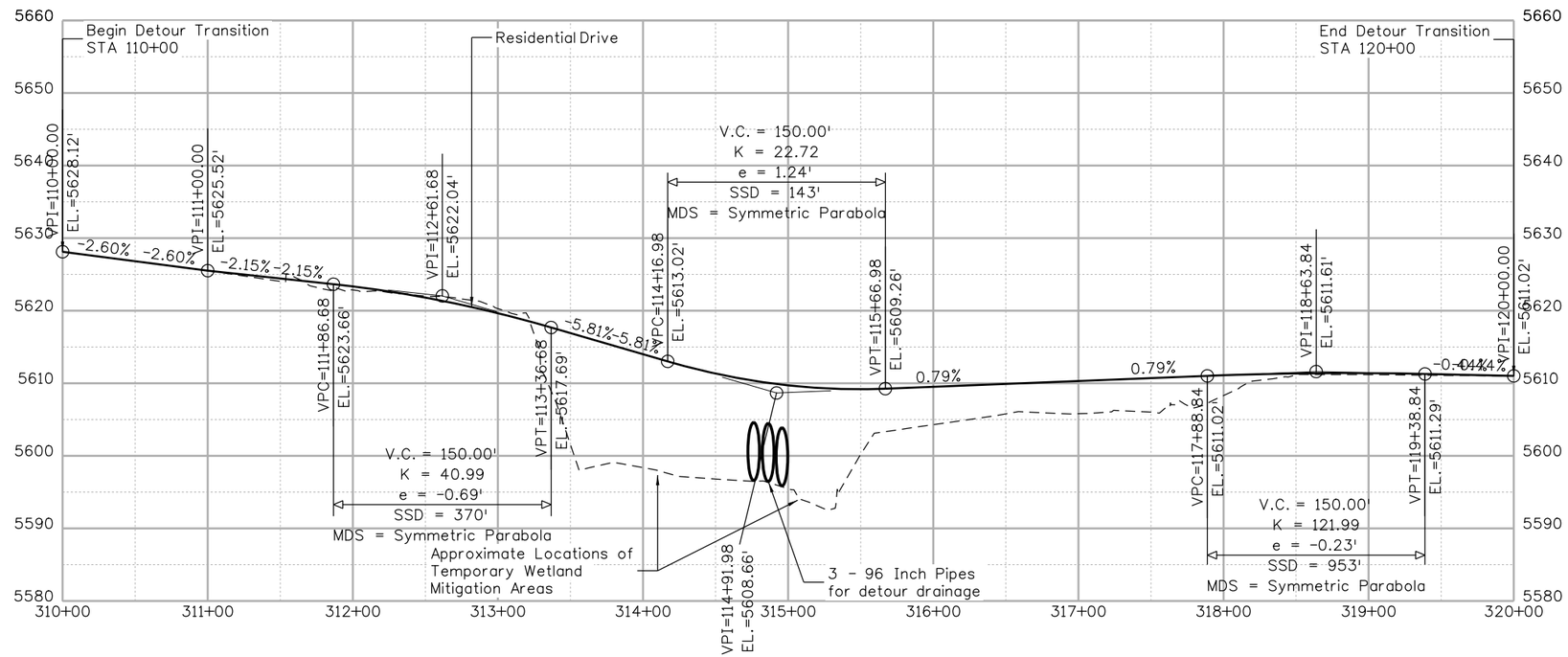

DETOUR DRAINAGE PIPE PROFILES

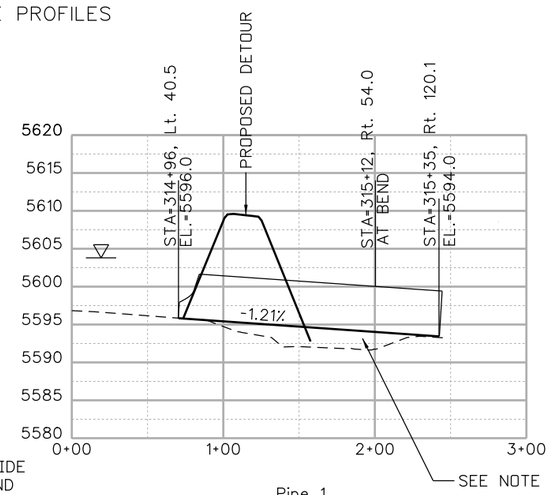

Pipe 1
96-INCH CMP -165.1 LF @ 1.21% SLOPE

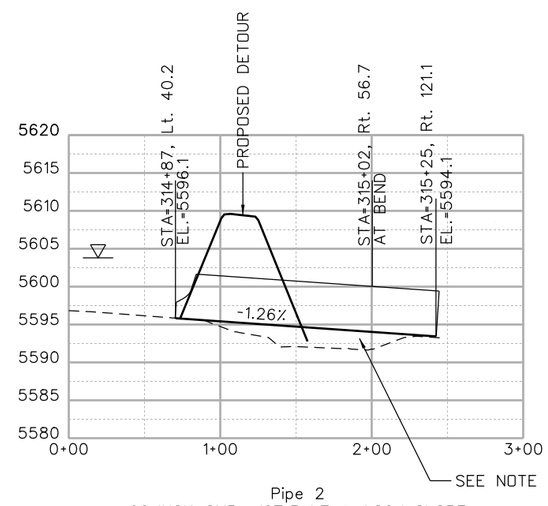

Pipe 2
96-INCH CMP -167.3 LF @ 1.26% SLOPE

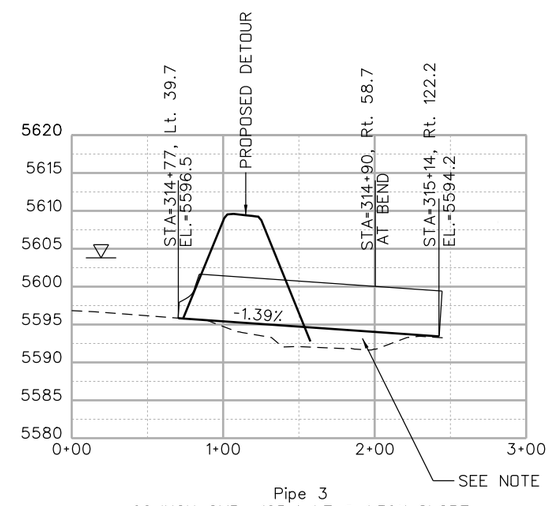

Pipe 3
96-INCH CMP -165.4 LF @ 1.39% SLOPE

NOTE: CONTRACTOR TO PROVIDE MEASURES FOR LATERAL AND VERTICAL STABILITY OF PIPES

Print Date: 2/8/2013	Sheet Revisions			Colorado Department of Transportation	As Constructed
File Name: 18208-Detour-profile.dgn	Date:	Comments	Init.	902 Erie Avenue Pueblo, CO 81001 Phone: 719-546-5439 FAX: 719-546-5702	No Revisions:
Horiz. Scale: 1:100 Vert. Scale: As Noted				Region 2 JDH	Revised:
Unit Information Unit Leader Initials					Void:

PROFILE SHEET - DETOUR -				Project No./Code
				FBR 3501-013
Designer: jlb	Structure Numbers	0-19-R		18208
Detailer: jlb				
Sheet Subset:detourPROF	Subset Sheets:	1 of 1		Sheet Number 21

billingsj 10:39:59 AM c:\projectwise\pwz_working\d0224698\18208-Detour-profile.dgn

GENERAL NOTES

Structure excavation and backfill shall be as shown on the plans.

Expansion joint material shall meet AASHTO Specification M213.

The final finish for the surfaces of the Type 10M Bridge Rail and curbs shall be Class 2. All other exposed concrete surfaces shall receive a Class 1 final finish to one foot below the ground line.

Leveling pads are unlaminated bearings. They shall be cut or molded from AASHTO elastomer grade 3, 4, or 5 as described in Tables 705-1 and 705-2 with a durometer (Shore "A") hardness of 60.

Grade 60 reinforcing steel is required.

All reinforcing steel shall be epoxy coated unless otherwise noted.

N denotes non coated reinforcing steel.

All the provisions for bridge deck concrete shall also apply to approach slab concrete.

An emergency deck construction joint may be located at the one quarter span point back from a pier or abutment with respect to the direction of the deck placement.

The Contractor shall be responsible for the stability of the structure during construction.

Ah.	= Ahead	Elev.	= Elevation	O.C.	= On Center
Abut.	= Abutment	Embed.	= Embedment	Pgl	= Profile Grade Line
B.F.	= Back Face	Eq.	= Equally	Proj.	= Projection
Bk.	= Back	F.F.	= Front Face	ROW	= Right of Way
Bot.	= Bottom	Galv.	= Galvanized	Shld.	= Shoulder
Brg.	= Bearing	Jt.	= Joint	Spa.	= Spaced
Clr.	= Clear	LOL	= Layout Line	Sta.	= Station
Const.	= Construction	Max.	= Maximum	Std.	= Standard
Cont.	= Continuous	Min.	= Minimum	Str.	= Structure
Dwg.	= Drawing	No.	= Number	Typ.	= Typical
E.F.	= Each Face	Nom.	= Nominal		

Permanent steel deck forms are not allowed.

For structure number installation, see standard S-614-12.

Stations, elevations, and dimensions contained in these plans are calculated from a recent field survey. The Contractor shall verify all dependent dimensions in the field before ordering or fabricating any material.

The following table gives the minimum lap splice length for epoxy coated reinforcing bars placed in accordance with Subsection 602.06. These splice lengths shall be increased by 25% for bars spaced at less than 6" or for bars with clear cover less than 3Ø.

Bar Size	#4	#5	#6	#7	#8	#9	#10	#11
Splice length for Class D and PS concrete	1'-7"	1'-11"	2'-4"	2'-9"	3'-8"	4'-7"	5'-10"	7'-2"

The above splice lengths shall be increased by 20 percent for 3 bar bundles and 33 percent for 4 bar bundles.

The information shown on these plans concerning the type and location of underground utilities is not guaranteed to be accurate or all inclusive. The Contractor shall contact the Utility Notification Center of Colorado at 811 (1-800-922-1987) three business days (two full business days in advance not including the day of notification) prior to any excavation or other earthwork.

DESIGN DATA

AASHTO LRFD Bridge Design Specifications, Sixth Edition 2012

Design Method: Load and Resistance Factor Design

Live Load: HL-93 (design truck or tandem, and design lane load) and Colorado Permit Vehicle
Dead Load: Assumes 36 lbs. per sq. ft. for bridge deck overlay

Reinforced Concrete:

Class D Concrete: f'c = 4,500 psi
Reinforcing Steel: fy = 60,000 psi

Caisson Concrete:

Class BZ Concrete: f'c = 4,000 psi
Reinforcing Steel: fy = 60,000 psi

Precast prestressed concrete:

Class PS concrete f'c = (see details)
f's = 270,000 psi

(C1) Denotes Caisson Number

(1A) Denotes Girder Number

(P1) Denotes Pile Number

⟨1⟩ Denotes Keynote Reference

INDEX OF DRAWINGS

BRIDGE DESCRIPTION

3-Span (82'-0", 91'-0", 82'-0") Replacement
Concrete Prestressed Box Girder Continuous (precast)
Over Purgatoire River

FOR BURIED UTILITY INFORMATION
THREE (3) BUSINESS DAYS
BEFORE YOU DIG
CALL 811
(or 1-800-922-1987)
UTILITY NOTIFICATION
CENTER OF COLORADO (UNCC)
www.uncc.org

XX
BXX

Section or Detail Identification

Cross Reference Drawing Number
(if blank or dash, reference is to same sheet)

Design			Detail			Quantities		
	INITIAL	DATE		INITIAL	DATE		INITIAL	DATE
Designed By	JTF	10-12	Detailed By	CJK	10-12	Quantities By	JTF	11-12
Checked By	PP	11-12	Checked By	PP	11-12	Checked By	WZ	11-12

18026 1:20:56 PM c:\projectwise\pwz_working\d0224606\18208BRDG_SH350_GenInfo01.dgn

Print Date: 2/1/2013
File Name: 18208BRDG_SH350_GenInfo01.dgn
Horiz. Scale: None Vert. Scale: None
Staff Bridge Branch - Unit 0226 DDG

ATKINS
4601 DTC Boulevard, Suite 700
Denver, CO 80237
Phone: (303) 221-7275 Fax: (303) 221-7276

Sheet Revisions		
Date:	Comments	Init.

Colorado Department of Transportation
CDOT DEPARTMENT OF TRANSPORTATION
902 Erie Avenue
Pueblo, CO 81001
Phone: 719-546-5438 FAX: 719-546-5702
Region 02 JDH

As Constructed
No Revisions:
Revised:
Void:

SH 350 OVER PURGATOIRE RIVER
GENERAL INFORMATION

Designer:	J. Fuller	Structure Numbers	0-19-R
Detailer:	C. Kuthy		
Sheet Subset:	Bridge	Subset Sheets: B01 of 31	

Project No./Code
FBR 3501-013
18208
Sheet Number 22

SUMMARY OF QUANTITIES (1)

Item No.	Description	Unit	Super-structure	Abut. 1	Pier 2	Pier 3	Abut. 4	Approach Slab	Total
202	Removal of Bridge	Each	-	-	-	-	-	-	1
206	Structure Excavation	CY	-	420	44	118	269	-	851
206	Structure Backfill (Class 1)	CY	-	256	-	-	166	-	422
206	Structure Backfill (Class 2)	CY	-	77	35	104	46	-	262
206	Mechanical Reinforcement of Soil	CY	-	256	-	-	166	-	422
403	HBP (GR SX)(75)(PG 64-22)	Ton	166	-	-	-	-	25	191
502	Drilling Hole to Facilitate Pile Driving	LF	-	150	-	-	-	-	150
502	Pile Tip	Each	-	10	-	-	10	-	20
502	Steel Pile (HP 12x74)	LF	-	254	-	-	305	-	559
503	Drilled Caisson (42 Inch)	LF	-	-	105	90	-	-	195
515	Waterproofing (Membrane)	SY	1026	-	-	-	-	151	1177
518	Bridge Expansion Device (0-4 Inch)	LF	-	-	-	-	-	75	75
601	Concrete Class D (Bridge)	CY	318	45	40	42	32	78	555
602	Reinforcing Steel (Epoxy Coating)	LB	78900	3551	8036	8511	3216	15441	117655
606	Bridge Rail Type 10M	LF	513	-	-	-	-	94	607
618	Prestressed Concrete Box (Depth 32" Through 48")	SF	9057	-	-	-	-	-	9057

KEYNOTES:

(1) Includes all structure quantities between back to back of approach slabs. Riprap and unclassified excavation is included in roadway quantities.

Design			Detail			Quantities		
	INITIAL	DATE		INITIAL	DATE		INITIAL	DATE
Designed By	JTF	11-12	Detailed By	CJK	11-12	Quantities By	JTF	11-12
Checked By	PP	11-12	Checked By	PP	11-12	Checked By	WZ	11-12

22463 4:26:04 PM c:\projectwise\pwz_working\d0224606\18208BRDG_SH350_SumQuant01.dgn

Print Date: 12/19/2012
File Name: 18208BRDG_SH350_SumQuant01.dgn
Horiz. Scale: None Vert. Scale: None
Staff Bridge Branch - Unit 0226 DDG

ATKINS
4601 DTC Boulevard, Suite 700
Denver, CO 80237
Phone: (303) 221-7275 Fax: (303) 221-7276

Sheet Revisions		
Date:	Comments	Init.

Colorado Department of Transportation
DOT
DEPARTMENT OF TRANSPORTATION
902 Erie Avenue
Pueblo, CO 81001
Phone: 719-546-5438 FAX: 719-546-5702
Region 2 JDH

As Constructed
No Revisions:
Revised:
Void:

SH 350 OVER PURGATOIRE RIVER
SUMMARY OF QUANTITIES

Designer: J. Fuller
Detailer: C. Kuthy
Sheet Subset: Bridge
Structure Numbers 0-19-R
Subset Sheets: B02 of 31

Project No./Code
FBR 3501-013
18208
Sheet Number 23

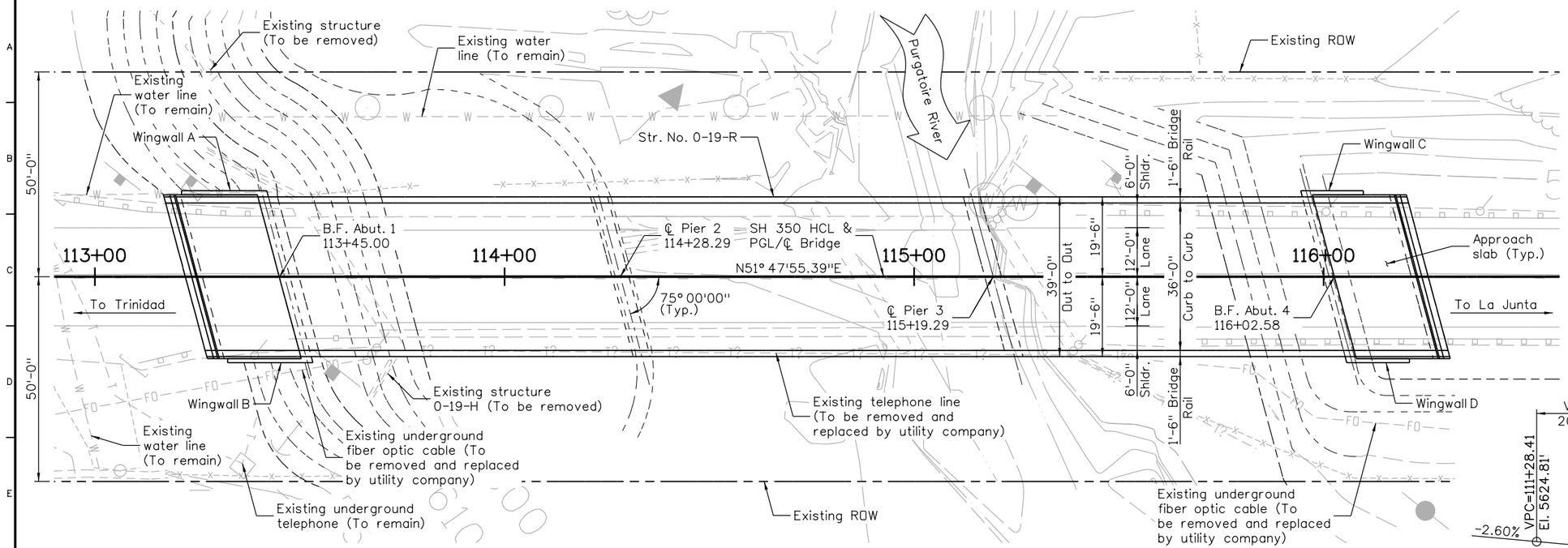

PLAN

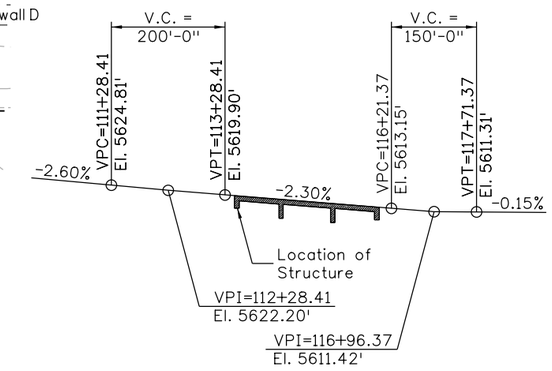

PROFILE GRADE

(Taken along SH 350 PGL/℄ Bridge, No scale)

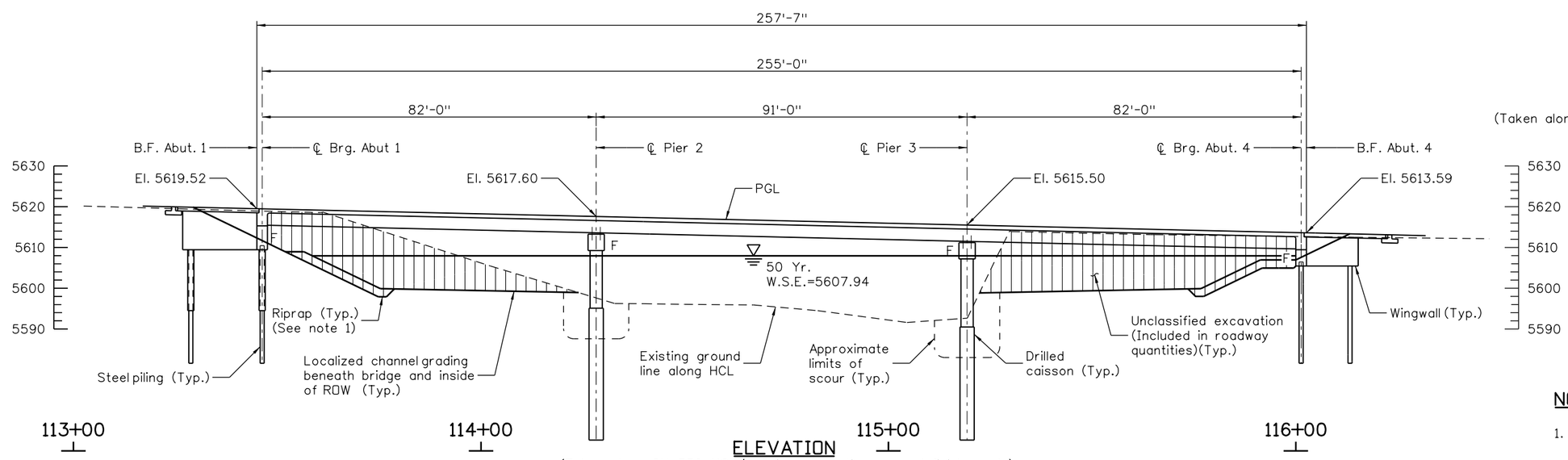

ELEVATION

(Taken along SH 350 HCL/℄ Bridge, Elevations are at finish grade)

NOTE:

1. For slope protection limits and details, see Hydraulic Information sheets.

Design	INITIAL	DATE	Detail	INITIAL	DATE	Quantities	INITIAL	DATE
Designed By	JTF	10-12	Detailed By	CJK	10-12	Quantities By	JTF	11-12
Checked By	PP	11-12	Checked By	PP	11-12	Checked By	WZ	11-12

Print Date: 2/1/2013
File Name: 18208BRDG_SH350_GenLayout01.dgn
Horiz. Scale: 1:30 Vert. Scale: 1:30
Staff Bridge Branch - Unit 0226 DDG

ATKINS
4601 DTC Boulevard, Suite 700
Denver, CO 80237
Phone: (303) 221-7275 Fax: (303) 221-7276

Sheet Revisions		
Date:	Comments	Init.

Colorado Department of Transportation
902 Erie Avenue
Pueblo, CO 81001
Phone: 719-546-5438 FAX: 719-546-5702
Region 02 JDH

As Constructed
No Revisions:
Revised:
Void:

SH 350 OVER PURGATOIRE RIVER
GENERAL LAYOUT

Designer: J. Fuller
Detailer: C. Kuthy
Sheet Subset: Bridge
Structure Numbers: 0-19-R
Subset Sheets: B03 of 31

Project No./Code
FBR 3501-013
18208
Sheet Number 24

18026 1:23:14 PM c:\projectwise\pwz_working\d0224606\18208BRDG_SH350_GenLayout01.dgn

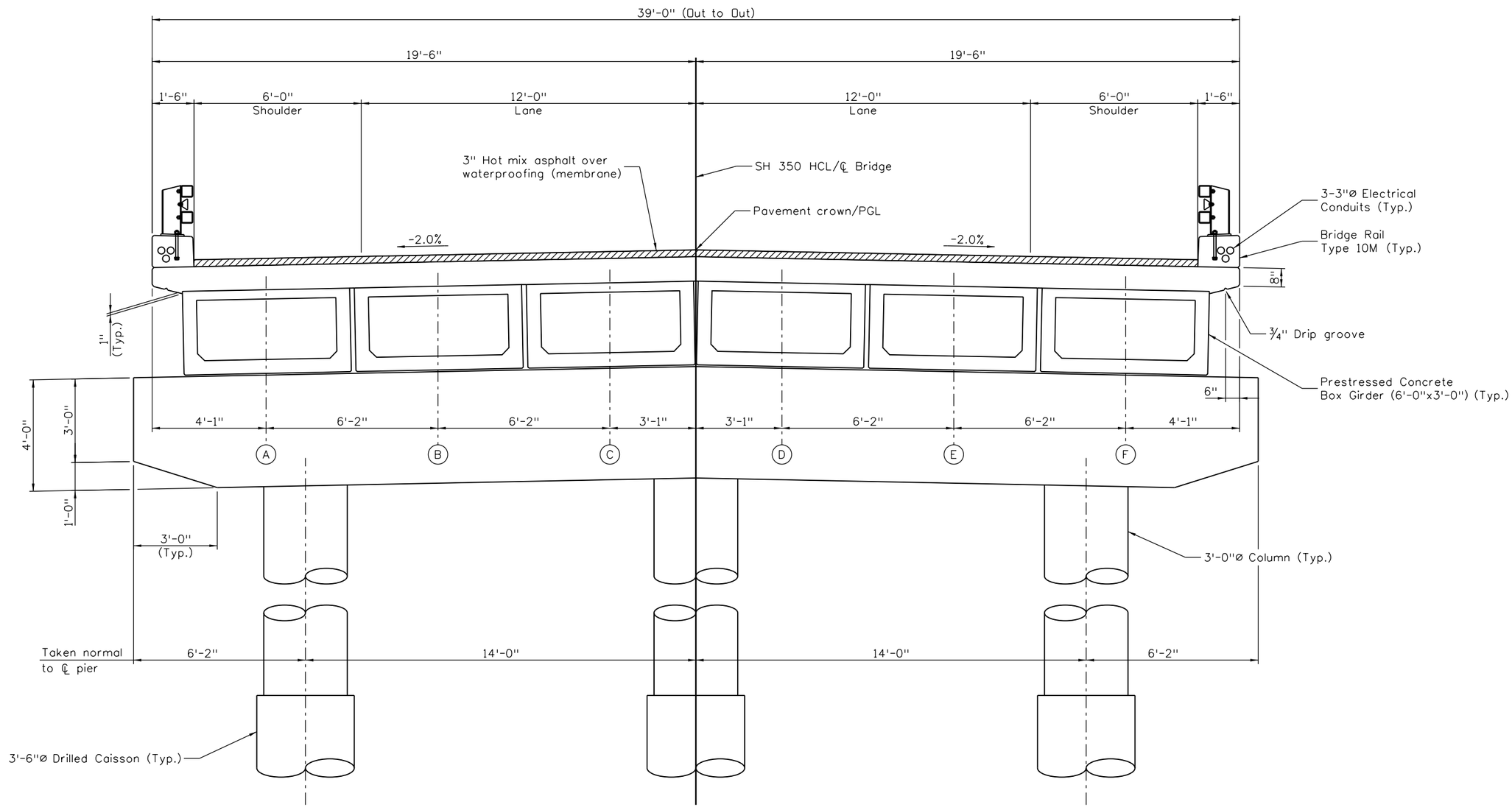

TYPICAL SECTION

(Looking ahead station)

Design						Detail						Quantities					
	INITIAL	DATE		INITIAL	DATE		INITIAL	DATE		INITIAL	DATE		INITIAL	DATE		INITIAL	DATE
Designed By	JTF	10-12	Detailed By	DET	10-12	Quantities By	JTF	11-12									
Checked By	PP	11-12	Checked By	PP	11-12	Checked By	WZ	11-12									

22463 4:26:21 PM c:\projectwise\pwz_working\d0224606\18208BRDG_SH350_TypSec01.dgn

Print Date: 12/19/2012
File Name: 18208BRDG_SH350_TypSec01.dgn
Horiz. Scale: 1:4 Vert. Scale: 1:4
Staff Bridge Branch - Unit 0226 DDG

ATKINS
4601 DTC Boulevard, Suite 700
Denver, CO 80237
Phone: (303) 221-7275 Fax: (303) 221-7276

Sheet Revisions		
Date:	Comments	Init.

Colorado Department of Transportation
DOT
DEPARTMENT OF TRANSPORTATION
902 Erie Avenue
Pueblo, CO 81001
Phone: 719-546-5438 FAX: 719-546-5702
Region 2 JDH

As Constructed
No Revisions:
Revised:
Void:

SH 350 OVER PURGATOIRE RIVER
TYPICAL SECTION

Designer: J. Fuller
Detailer: D. Tanner
Sheet Subset: Bridge
Structure Numbers: 0-19-R
Subset Sheets: B04 of 31

Project No./Code
FBR 3501-013
18208
Sheet Number 25

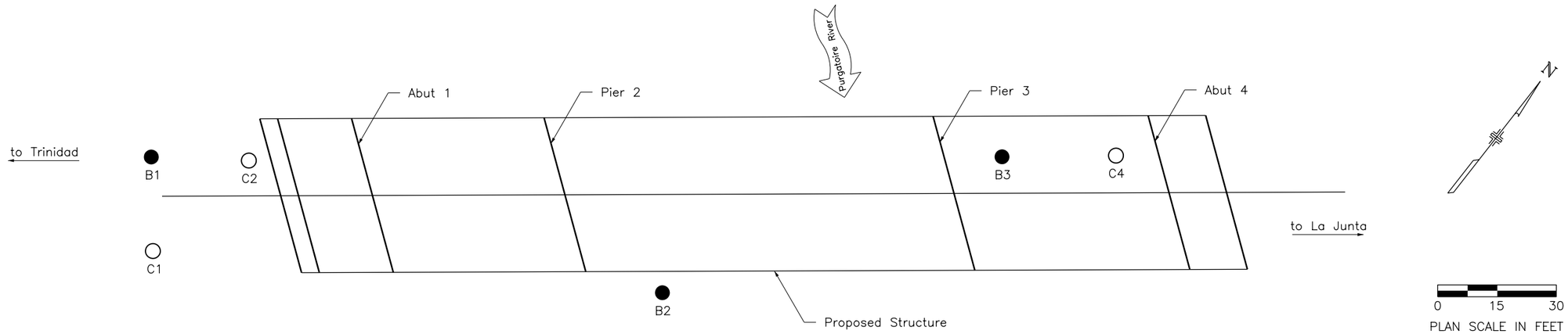

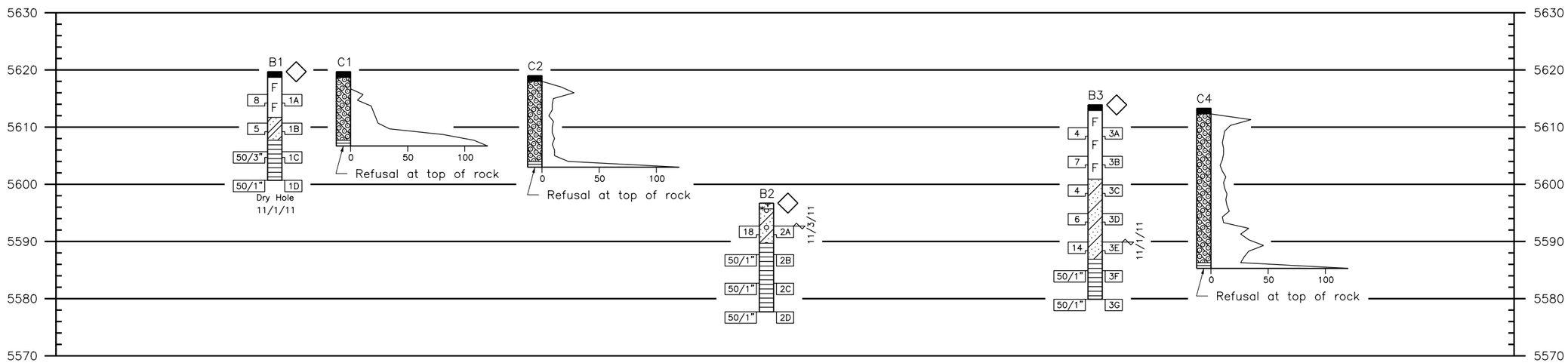

The boring logs of the above test holes and geotechnical report are on file in the Geotechnical Program Office, Staff Materials and Geotechnical Branch, (303)398-6601

SUMMARY OF TEST RESULTS

Sample Number	Depth (feet)	Classification: Corps of Engrs. or Visual	Classification: USCS	Classification: AASHTO	Grading Analysis (AASHTO) Percent: Gravel	Coarse Sand	Fine Sand	Silt and Clay	Atterberg Limits: L.L. L_W	P.L. P_W	P.I. I_W	Water Content W %	Water Soluble Sulfates (% mass)	Soil pH ($H_2O/CaCl_2$)	Resistivity ohm-cm Saturated
1D	19	Shale	CL	A-6(5)	26.4	14.7	7.5	51.4	31	15	16	6.8	–	–	–
2C	14	Shale	–	–	–	–	–	–	–	–	–	–	0.08	4.56	1150
3B	9	Sandy Clay	–	–	–	–	–	–	–	–	–	–	0.15	7.12	750
3C	14	Clayey Sand	SM-SC	A-4(0)	4.6	4.1	42.3	49.0	23	17	6	15.7	–	–	–
3D	19	Clayey Sand	SC	A-6(2)	7.0	5.8	40.0	47.2	27	16	11	20.5	–	–	–

TYPE OF MATERIAL

- Asphalt Pavement
- Topsoil
- Sandy Clay
- Shale Bedrock
- F Fill – Gravelly Sand to Sand to Sandy Clay
- Overburden Material
- Silty Sand to Clayey Sand
- Gravelly Sand

LEGEND

TEST BORING

- 3" Hole Size
- Blows per foot* 30 — 1A Sample Number
- R = Refusal on SPT
- C = California Sample
- 50/0.1 — Water Level
- 50 Blows in 0.1 ft
- Core Recovery 50
- R.Q.D. 25
- *Standard Penetration Test (AASHTO T 206-87(2000))

CONTINUOUS PENETRATION TEST

- 2 Inch Diameter Drive Point
- 30 Inch Free Fall
- 140 Pound Hammer
- 0 50 100 Blows Per Foot

- Location of Test Boring
- Location of Continuous Penetration Test
- W 3 Inch Wireline Boring
- Rotary Boring
- Auger Boring

Print Date: 12/12/2012
Drawing File Name: 18208geosheet01.dgn
Horiz. Scale: 1:30 Vert. Scale: As Noted
Staff Geotechnical Program LAC

R-X

Sheet Revisions

Date:	Comments	Init.

Colorado Department of Transportation
4670 Holly Street, Unit A
Denver, CO 80216
Phone: 303-398-6601 FAX: 303-398-6504
Staff Geotechnical Program LAC

As Constructed
No Revisions:
Revised:
Void:

ENGINEERING GEOLOGY

Designer: I. Ksouri
Detailer: T. McNulty
Sheet Subset: Geology
Structure Numbers: 0-19-H (exist)
Subset Sheets: B05 of 31

Project No./Code
FBR 350-013
18208
Sheet Number 26

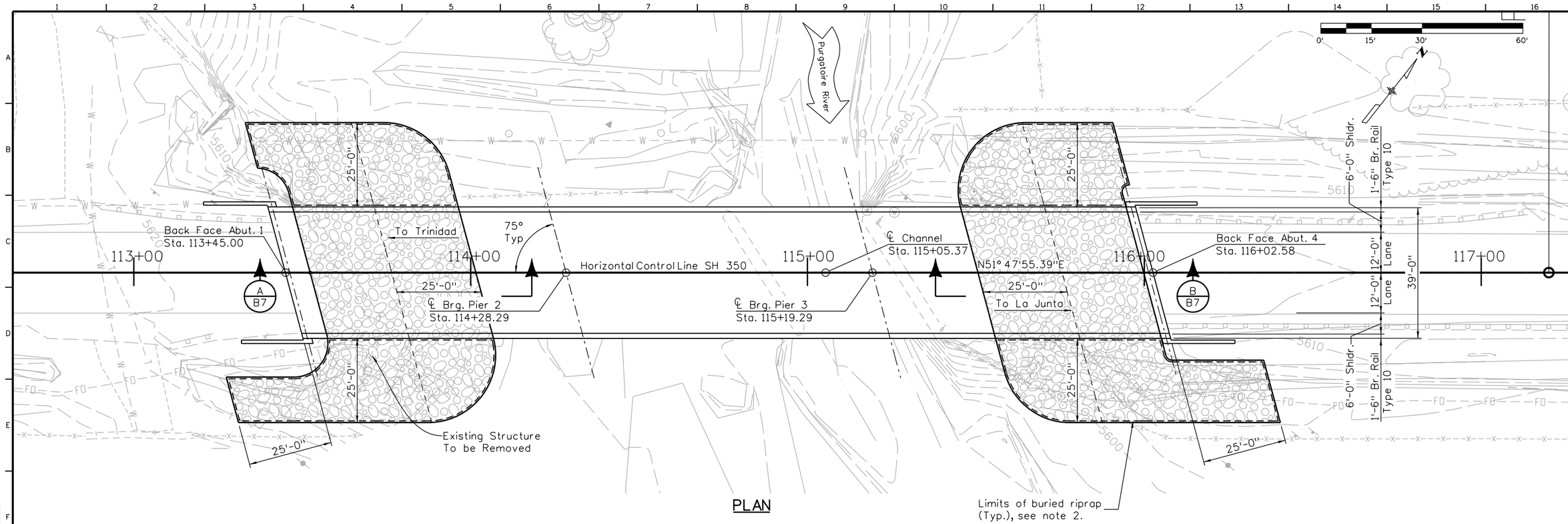

PLAN

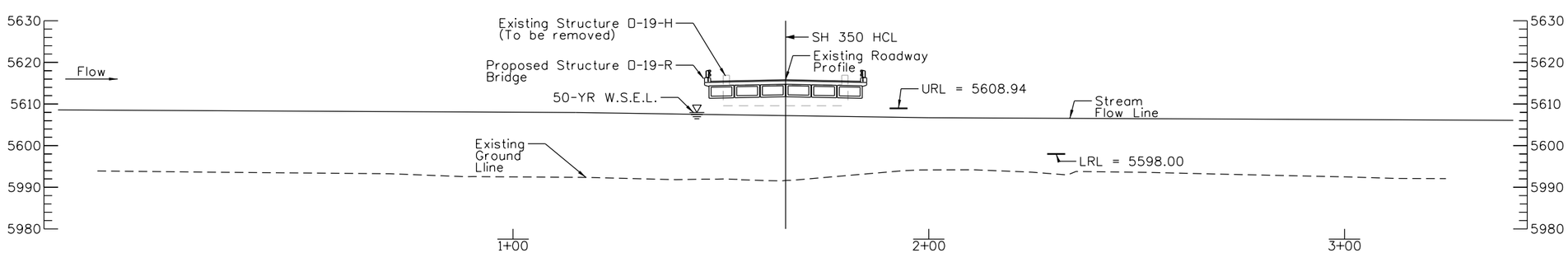

PROFILE OF WATER SURFACE & RIPRAP REFERENCE LINES

(TAKEN ALONG ℄ CHANNEL LOW FLOW)

NOTES:

1. The plan drawing is rotated 90° from the profile of water surface and riprap reference lines.
2. Riprap located outside bridge footprint shall be covered with 6" of Topsoil, Seeding (Native) and Soil Retention Blanket (Straw-Coconut) (Biodegradable Class 1). Blanket required on 2:1 slopes only.

Design			Detail			Quantities		
	INITIAL	DATE		INITIAL	DATE		INITIAL	DATE
Designed By	CD	11-12	Detailed By	ERS	11-12	Quantities By	CD	11-12
Checked By	JH	11-12	Checked By	JH	11-12	Checked By	JH	11-12

22463 4:26:33 PM c:\projectwise\pwz_working\d0224737\18208-HYD-01.dgn

Print Date: 12/19/2012
File Name: 18208-HYD-01.dgn
Horiz. Scale: NTS Vert. Scale: NTS
Staff Bridge Branch - Unit 0226 DDG

ATKINS
4601 DTC Boulevard, Suite 700
Denver, CO 80237
Phone: (303) 221-7275 Fax: (303) 221-7276

Sheet Revisions		
Date:	Comments	Init.

Colorado Department of Transportation
902 Erie Avenue
Pueblo, CO 81001
Phone: 719-546-5438 FAX: 719-546-5702
Region 2 JDH

As Constructed
No Revisions:
Revised:
Void:

SH 350 OVER PURGATOIRE RIVER
HYDRAULIC INFORMATION
(SHEET 1 OF 2)

Designer: C. Das
Detailer: E. Schawo
Sheet Subset: Bridge
Structure Numbers: D-19-R
Subset Sheets: B06 of 31

Project No./Code
FBR 3501-013
18208
Sheet Number 27

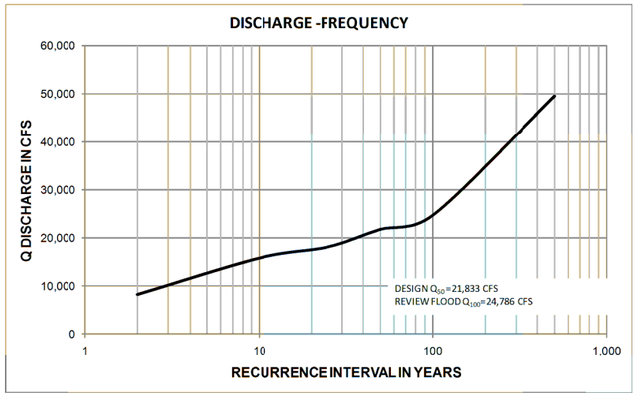

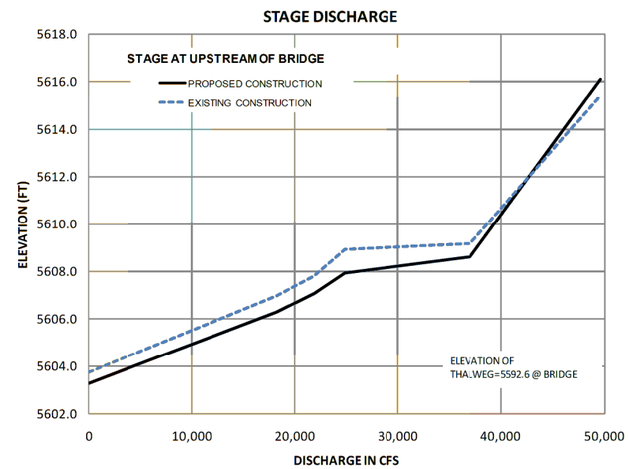

** 8" of bed course material may be used in lieu of embankment when geotextile is not used.)

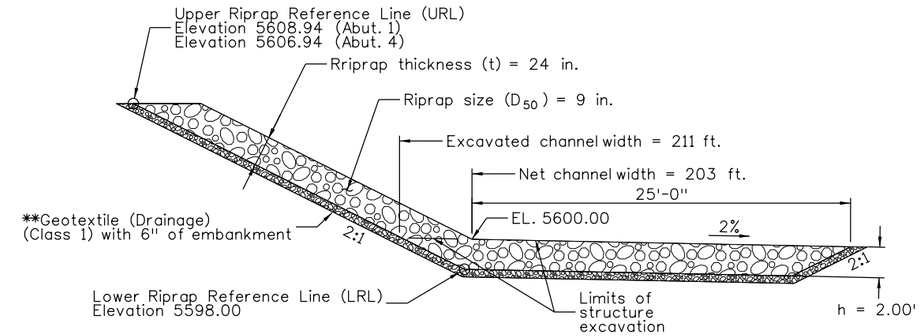

TYPICAL RIPRAP DETAIL

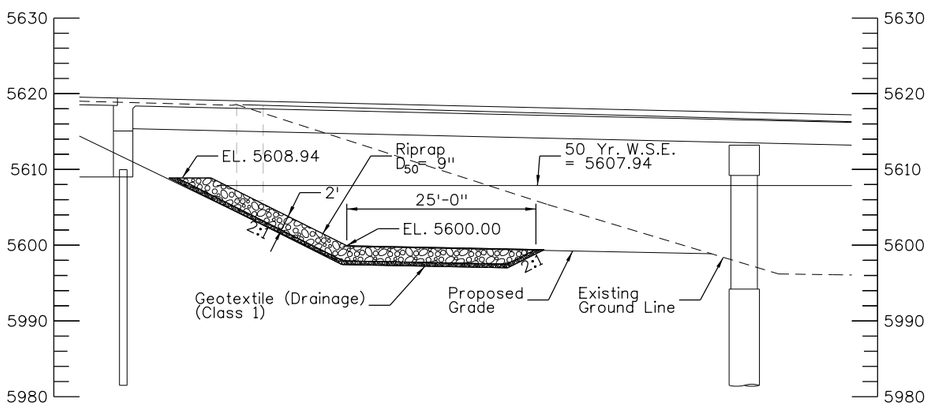

SECTION A/B6

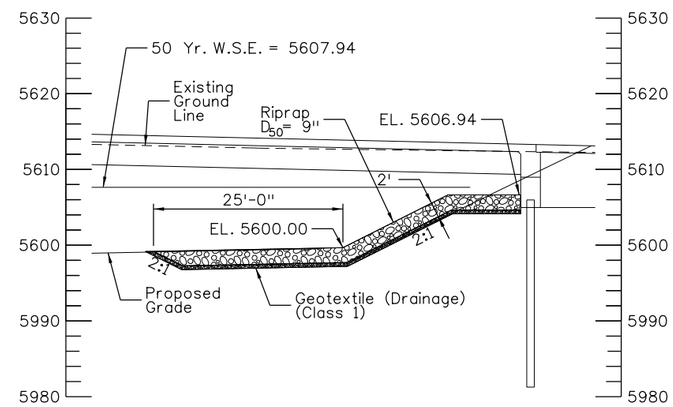

SECTION B/B6

DRAINAGE AREA 0.45 SQUARE MILES

CHANNEL DESCRIPTION

BOTTOM MATERIAL: COHESIVE ☐ NON-COHESIVE ■
BOTTOM MATERIAL SIZE: CLAY☐ SILT☐ SAND■ GRAVEL☐
COBBLES☐ OTHER☐
STREAM FORM: STRAIGHT ☐ MEANDERING■ BRAIDED☐
MANNINGS "N" FOR DESIGN: CHANNEL = 0.035 OVERBANK = 0.04
DEBRIS: BRUSH ■ TREES/LOGS☐ ICE☐ OTHER☐

COMPARISION OF HYDRAULICS Δ

	VELOCITY	REQUIRED FREEBOARD	AVAILABLE FREEBOARD	MAX. BACKWATER
EXISTING CHANNEL	12.7 fps.	3.3 FT.	0.51 FT.	2.1 FT.
PROPOSED CHANNEL	10.1 fps.	2.8 FT.	3.61 FT.	1.3 FT.

Quantities			
Quantities By	CD	INITIAL	DATE 11-12
Checked By	JH		11-12

Detail			
Detailed By	ERS	INITIAL	DATE 11-12
Checked By	JH		11-12

Design			
Designed By	CD	INITIAL	DATE 11-12
Checked By	JH		11-12

18026 1:27:39 PM c:\projectwise\pwz_working\d0224737\18208-HYD-02.dgn

Print Date: 2/1/2013
File Name: 18208-HYD-02.dgn
Horiz. Scale: NTS Vert. Scale: NTS
Staff Bridge Branch - Unit 0226 DDG

ATKINS
4601 DTC Boulevard, Suite 700
Denver, CO 80237
Phone: (303) 221-7275 Fax: (303) 221-7276

Sheet Revisions		
Date:	Comments	Init.

Colorado Department of Transportation
DOT
DEPARTMENT OF TRANSPORTATION
902 Erie Avenue
Pueblo, CO 81001
Phone: 719-546-5438 FAX: 719-546-5702
Region 02 JDH

As Constructed
No Revisions:
Revised:
Void:

SH 350 OVER PURGATOIRE RIVER
HYDRAULIC INFORMATION
(SHEET 2 OF 2)

Designer: C. Das
Detailer: E. Schawo
Sheet Subset: Bridge
Structure Numbers 0-19-R
Subset Sheets: B07 of 31

Project No./Code
FBR 3501-013
18208
Sheet Number 28

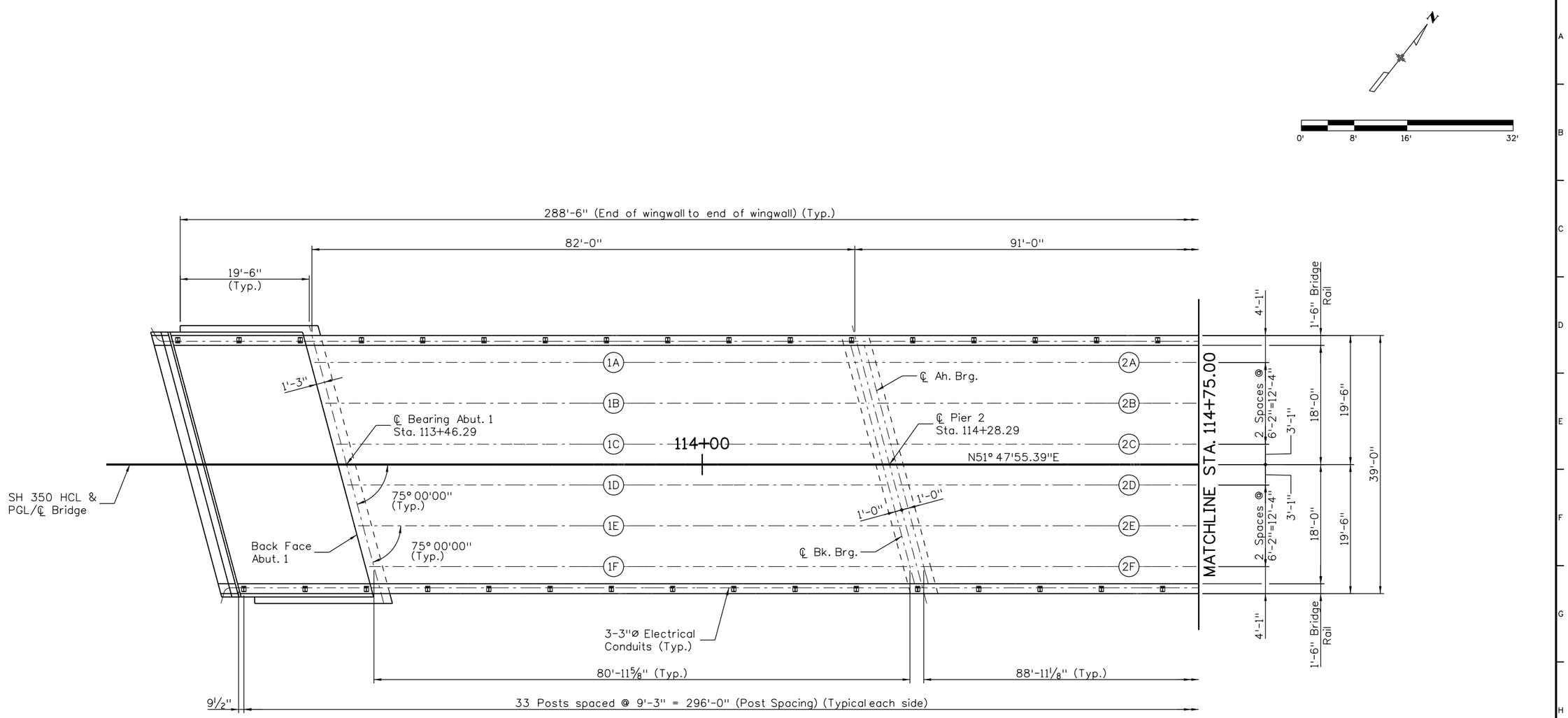

CONSTRUCTION LAYOUT

NOTE:

1. 3"ø Electrical conduit shall be bent as shown to clear barrier rail post. Expansion coupler is required at expansion joint and shall be paid for under item 613 3 Inch Electrical Conduit (Plastic).

Design	INITIAL	DATE	Detail	INITIAL	DATE	Quantities	INITIAL	DATE
Designed By	JTF	10-12	Detailed By	DET	10-12	Quantities By	JTF	11-12
Checked By	PP	11-12	Checked By	PP	11-12	Checked By	WZ	11-12

18026 1:32:21 PM c:\projectwise\pwz_working\d0224606\18208BRDG_SH350_ConstLayout01.dgn

Print Date: 2/1/2013
File Name: 18208BRDG_SH350_ConstLayout01.dgn
Horiz. Scale: 1:16 Vert. Scale: 1:16
Staff Bridge Branch - Unit 0226 DDG

ATKINS
4601 DTC Boulevard, Suite 700
Denver, CO 80237
Phone: (303) 221-7275 Fax: (303) 221-7276

Sheet Revisions		
Date:	Comments	Init.

Colorado Department of Transportation
DOT
DEPARTMENT OF TRANSPORTATION
902 Erie Avenue
Pueblo, CO 81001
Phone: 719-546-5438 FAX: 719-546-5702
Region 02 JDH

As Constructed
No Revisions:
Revised:
Void:

SH 350 OVER PURGATOIRE RIVER
CONSTRUCTION LAYOUT
(SHEET 1 OF 2)

Designer: J. Fuller
Detailer: D. Tanner
Sheet Subset: Bridge
Structure Numbers 0-19-R
Subset Sheets: B08 of 31

Project No./Code
FBR 3501-013
18208
Sheet Number 29

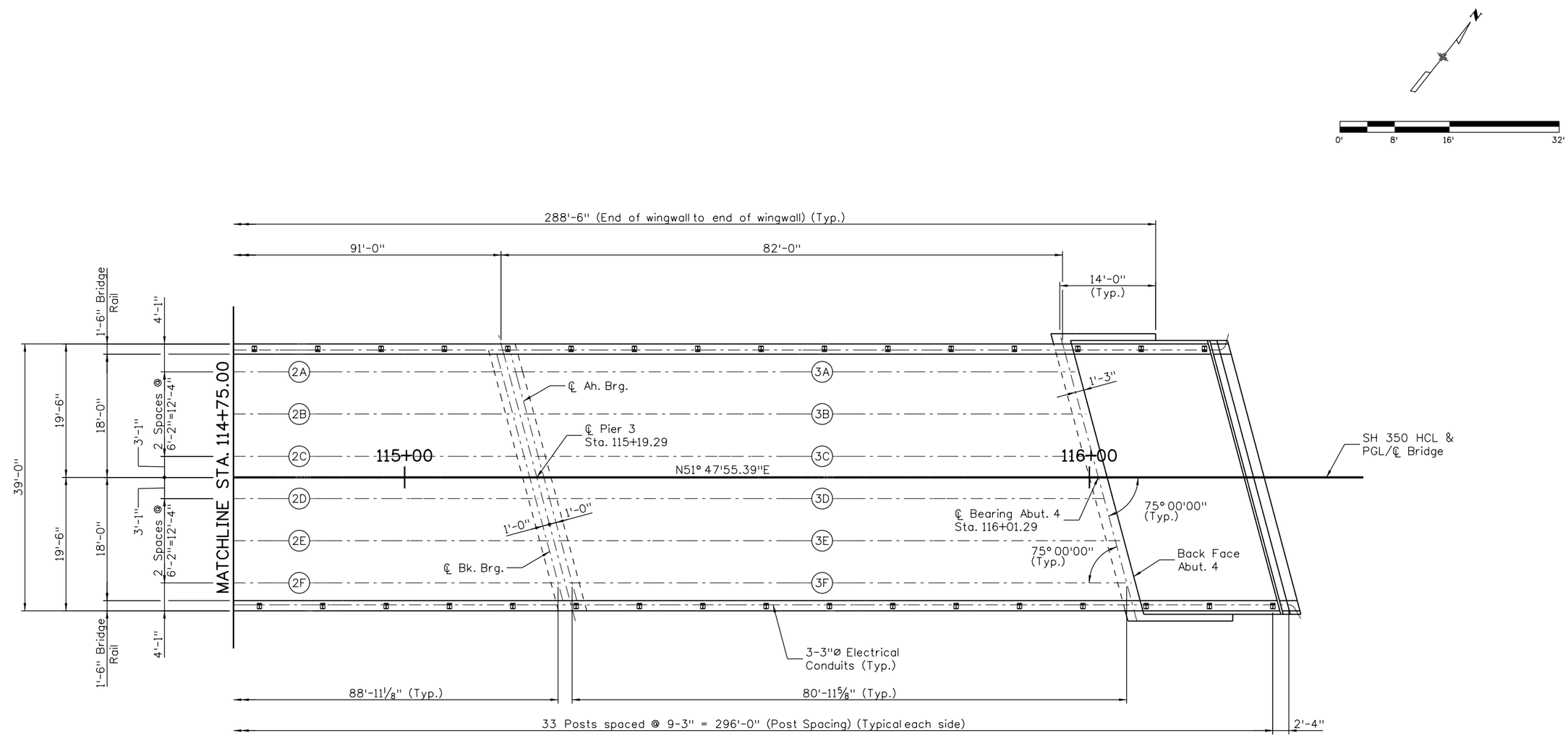

CONSTRUCTION LAYOUT

NOTE:

1. 3"ø Electrical conduit shall be bent as shown to clear barrier rail post. Expansion coupler is required at expansion joint and shall be paid for under item 613 3 Inch Electrical Conduit (Plastic).

Design	INITIAL	DATE	Detail	INITIAL	DATE	Quantities	INITIAL	DATE
Designed By	JTF	10-12	Detailed By	DET	10-12	Quantities By	JTF	11-12
Checked By	PP	11-12	Checked By	PP	11-12	Checked By	WZ	11-12

18026 1:25:17 PM c:\projectwise\pwz_working\d0224606\18208BRDG_SH350_ConstLayout02.dgn

Print Date: 2/1/2013
File Name: 18208BRDG_SH350_ConstLayout02.dgn
Horiz. Scale: 1:16 Vert. Scale: 1:16
Staff Bridge Branch - Unit 0226 DDG

ATKINS
4601 DTC Boulevard, Suite 700
Denver, CO 80237
Phone: (303) 221-7275 Fax: (303) 221-7276

0000

Sheet Revisions		
Date:	Comments	Init.

Colorado Department of Transportation
902 Erie Avenue
Pueblo, CO 81001
Phone: 719-546-5438 FAX: 719-546-5702
Region 02 JDH

As Constructed
No Revisions:
Revised:
Void:

SH 350 OVER PURGATOIRE RIVER
CONSTRUCTION LAYOUT
(SHEET 2 OF 2)

Designer: J. Fuller
Detailer: D. Tanner
Sheet Subset: Bridge
Structure Numbers: 0-19-R
Subset Sheets: B09 of 31

Project No./Code
FBR 3501-013
18208
Sheet Number 30

FOR BURIED UTILITY INFORMATION
THREE (3) BUSINESS DAYS
BEFORE YOU DIG
CALL 811
(or 1-800-922-1987)
UTILITY NOTIFICATION
CENTER OF COLORADO (UNCC)
www.uncc.org

PILE SUMMARY TABLE

Location	Pile size	Pile cutoff elev.	Minimum tip elev.	Estimated tip elev.	Maximum pile load (Tons)	Type
Abut. 1	HP 12x74	5610.32	5583.00	5585.0	91.0	End Bearing
Abut. 2	HP 12x74	5606.46	5578.46	5576.0	91.0	End Bearing

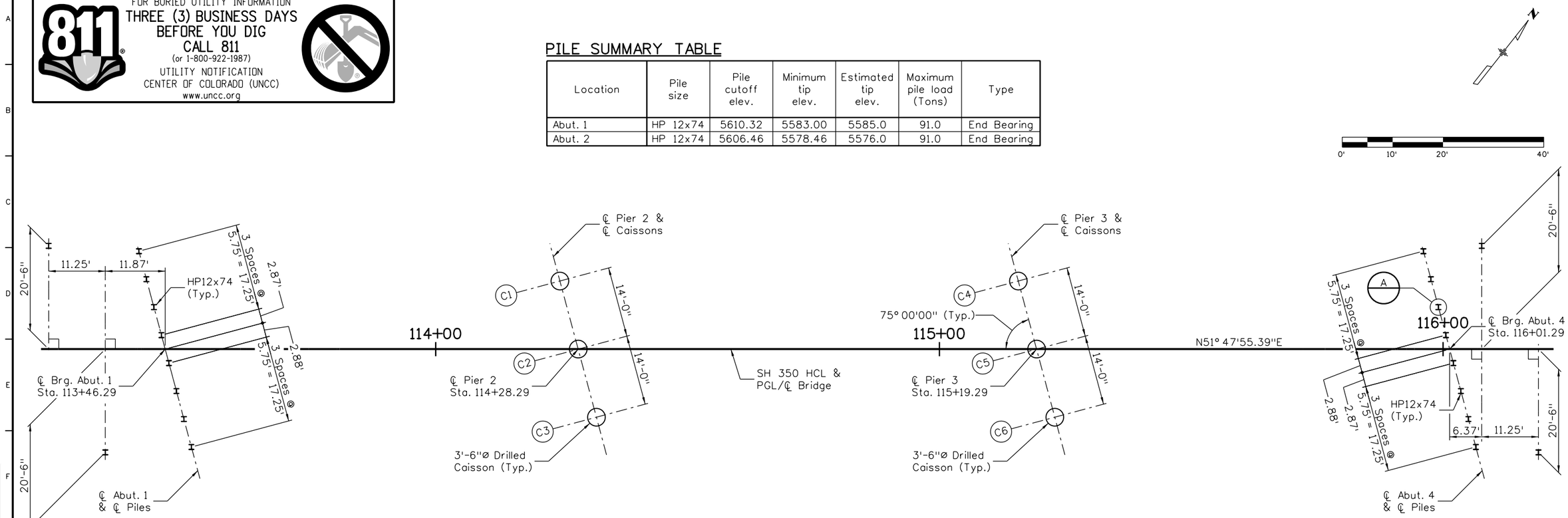

FOUNDATION LAYOUT
Scale: 1"=20'-0"

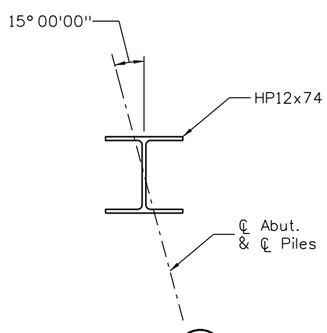

DETAIL A
Scale: 1/2"=1'-0"

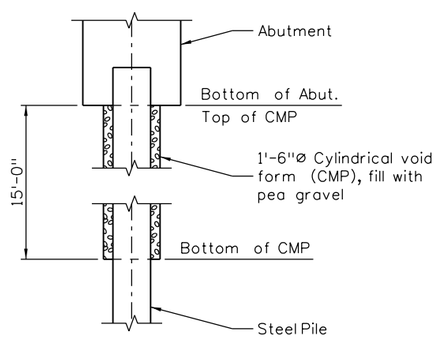

PILE PLACEMENT DETAIL
(Applies at Abut. 1 only)

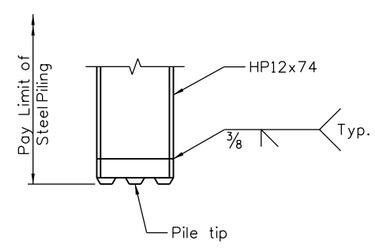

PILE REINFORCING TIP
Scale: 1/2"=1'-0"

NOTE:

1. HP12x74 Pile dimensions shown are at bottom of concrete.
2. Dimensions shown are measured horizontally and do not reflect vertical changes due to grade or terrain.
3. The estimated abutment pile tip elevation is the engineer's estimate of the final tip elevation and is provided for information only. Actual depths will vary in the field. The minimum pile tip elevation is established to ensure a minimum pile penetration below the abutment at abutment 4 and to ensure a minimum pile penetration below the scour elevation at abutment 1.
4. Pre-drilling of piles may be required to facilitate pile installation in native soil and to acheive the minimum pile tip elevation. See CDOT standard specification section 502.
5. Furnishing and placing of Cylindrical void form (CMP) and pea gravel shall be paid for under item 502 Drilling Hole to Facilitate Pile Driving.
6. For caisson details, see sheet B11.

Design	INITIAL	DATE	Detail	INITIAL	DATE	Quantities	INITIAL	DATE
Designed By	JTF	10-12	Detailed By	JML	10-12	Quantities By	JTF	11-12
Checked By	PP	11-12	Checked By	PP	11-12	Checked By	WZ	11-12

22463 4:27:03 PM c:\projectwise\pwz_working\d0224606\18208BRDG_SH350_FoundLyt01.dgn

Print Date: 12/19/2012
File Name: 18208BRDG_SH350_FoundLyt01.dgn
Horiz. Scale: As Noted Vert. Scale: As Noted
Staff Bridge Branch - Unit 0226 DDG

ATKINS
4601 DTC Boulevard, Suite 700
Denver, CO 80237
Phone: (303) 221-7275 Fax: (303) 221-7276

Sheet Revisions		
Date:	Comments	Init.

Colorado Department of Transportation
DOT
DEPARTMENT OF TRANSPORTATION
902 Erie Avenue
Pueblo, CO 81001
Phone: 719-546-5438 FAX: 719-546-5702
Region 2 JDH

As Constructed
No Revisions:
Revised:
Void:

SH 350 OVER PURGATOIRE RIVER
FOUNDATION LAYOUT

Designer: J. Fuller
Detailer: J. Lukas
Sheet Subset: Bridge
Structure Numbers: 0-19-R
Subset Sheets: B10 of 31

Project No./Code
FBR 3501-013
18208
Sheet Number 31

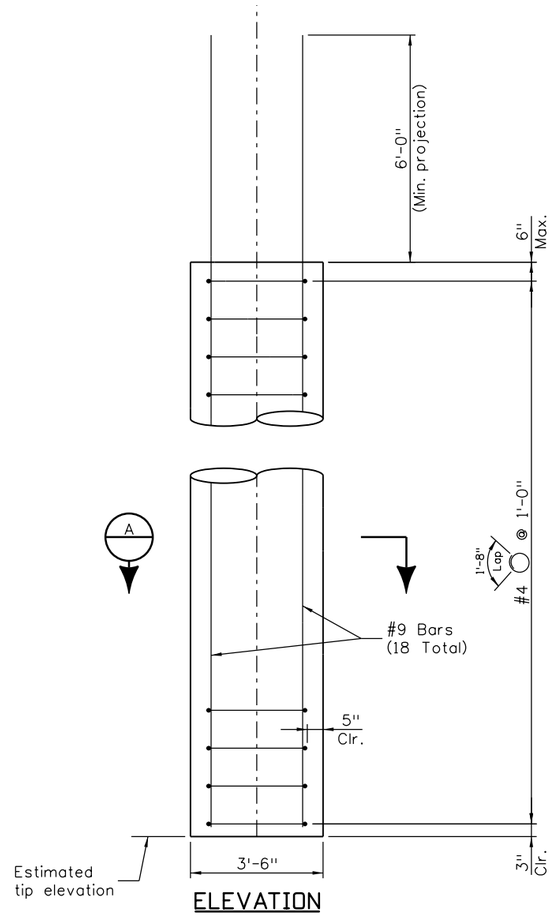

ELEVATION

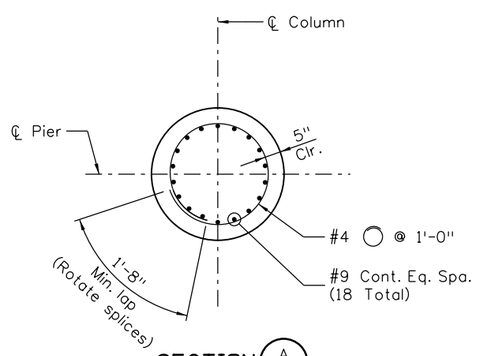

SECTION A

CAISSON SUMMARY TABLE

Location	Caisson diameter	Top of caisson elev.	Estimated bedrock elev.	Minimum penetration into bedrock (Ft.)	Estimated tip elev.	Factored maximum load (Kips)	Unfactored maximum load (Kips)
Pier 2	42" ø	5595.63	5587.70	27'-0"	5560.7	924.0	675.0
Pier 3	42" ø	5590.63	5587.70	27'-0"	5560.7	924.0	675.0

FOR BURIED UTILITY INFORMATION
THREE (3) BUSINESS DAYS
BEFORE YOU DIG
CALL 811
(or 1-800-922-1987)
UTILITY NOTIFICATION
CENTER OF COLORADO (UNCC)
www.uncc.org

NOTES:

1. Drilled caisson concrete shall be class BZ.
2. For location of caisson, see sheet B10.
3. Bars projecting from top of caisson shall be placed to fit inside the reinforcing cage of the pier column. Projecting bars shall be included in the cost of item 503, drilled caisson.
4. Lap splices shall be securely tied or clamped with engineer approved mechanical couplers, or butt welds conforming to aws, may be substituted for lap splices. Contractor shall be responsible for assembling and supporting the reinforcing cage to safely resist all loads imposed during handling and concrete placement. Cost of splices is included in item 503.

Quantities	INITIAL	DATE
Quantities By	JTF	11-12
Checked By	WZ	11-12

Detail	INITIAL	DATE
Detailed By	CJK	10-12
Checked By	PP	11-12

Design	INITIAL	DATE
Designed By	JTF	10-12
Checked By	PP	11-12

22463 4:27:11 PM c:\projectwise\pwz_working\d0224606\18208BRDG_SH350_Caisson01.dgn

Print Date: 12/19/2012
File Name: 18208BRDG_SH350_Caisson01.dgn
Horiz. Scale: 1:4 Vert. Scale: 1:4
Staff Bridge Branch - Unit 0226 DDG

ATKINS
4601 DTC Boulevard, Suite 700
Denver, CO 80237
Phone: (303) 221-7275 Fax: (303) 221-7276

Sheet Revisions		
Date:	Comments	Init.

Colorado Department of Transportation
DOT
DEPARTMENT OF TRANSPORTATION
902 Erie Avenue
Pueblo, CO 81001
Phone: 719-546-5438 FAX: 719-546-5702
Region 2 JDH

As Constructed
No Revisions:
Revised:
Void:

SH 350 OVER PURGATOIRE RIVER
CAISSON DETAILS

Designer: J. Fuller
Detailer: C. Kuthy
Sheet Subset: Bridge
Structure Numbers: 0-19-R
Subset Sheets: B11 of 31

Project No./Code
FBR 3501-013
18208
Sheet Number 32

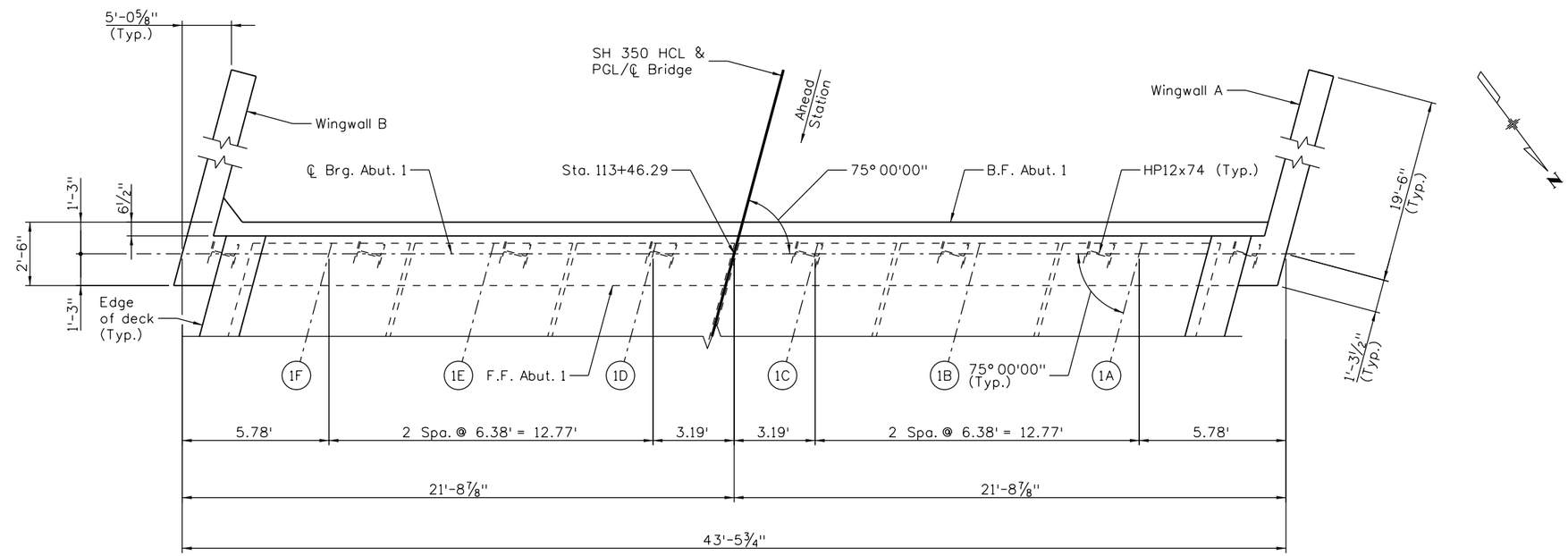

PLAN

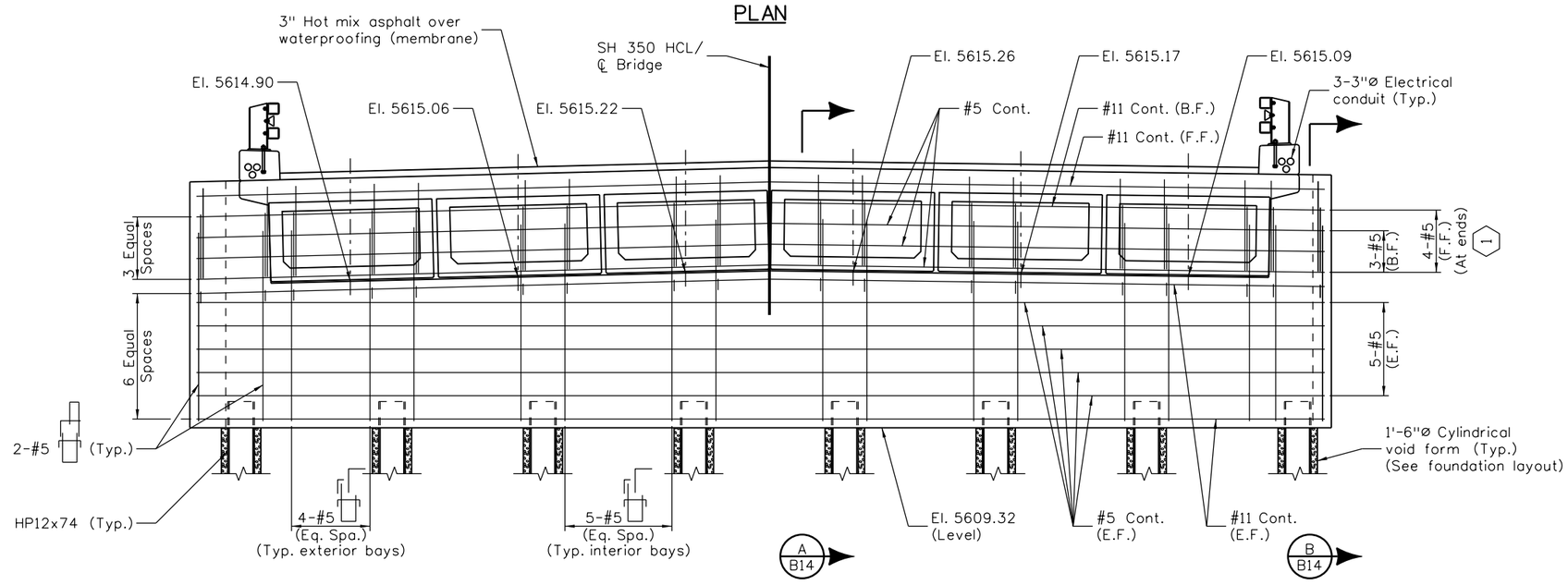

ELEVATION
(Looking Back Station)

NOTES:

1. Elevations shown are at ℄ bearing. Girder seat elevations are at ℄ bearing at ℄ girder at bottom of leveling strip.
2. All dimensions are horizontal. Horizontal dimensions measured along ℄ brg. abut.
3. The top of the abutment backwall shall match slope and grade of the roadway.
4. For pile layout, see dwg. no. B10.
5. Reinforcement shown on this sheet is for clarity of placement. For details of this reinforcement and all other reinforcement, see sections on dwg. no. B14.
6. For bearing seat details, see sheet B14.
7. For wingwall details, see sheet B15.

KEYNOTES:

1. #5 in front face shall be cut to provide 2" clear to girders. #5 in back face shall be continuous for full width of abutment.

Quantities	INITIAL	DATE
Quantities By	JTF	11-12
Checked By	WZ	11-12

Detail	INITIAL	DATE
Detailed By	DET	10-12
Checked By	PP	11-12

Design	INITIAL	DATE
Designed By	JTF	10-12
Checked By	PP	11-12

22463 4:27:17 PM c:\projectwise\pwz_working\d0224606\18208BRDG_SH350_Abut1_01.dgn

Print Date: 12/19/2012
File Name: 18208BRDG_SH350_Abut1_01.dgn
Horiz. Scale: 1:5.33333 Vert. Scale: 1:5.3333
Staff Bridge Branch - Unit 0226 DDG

ATKINS
4601 DTC Boulevard, Suite 700
Denver, CO 80237
Phone: (303) 221-7275 Fax: (303) 221-7276

Sheet Revisions		
Date:	Comments	Init.

Colorado Department of Transportation
DOT
DEPARTMENT OF TRANSPORTATION
902 Erie Avenue
Pueblo, CO 81001
Phone: 719-546-5438 FAX: 719-546-5702
Region 2 JDH

As Constructed
No Revisions:
Revised:
Void:

SH 350 OVER PURGATOIRE RIVER
ABUTMENT 1

Designer: J. Fuller
Detailer: D. Tanner
Sheet Subset: Bridge
Structure Numbers: 0-19-R
Subset Sheets: B12 of 31

Project No./Code
FBR 3501-013
18208
Sheet Number 33

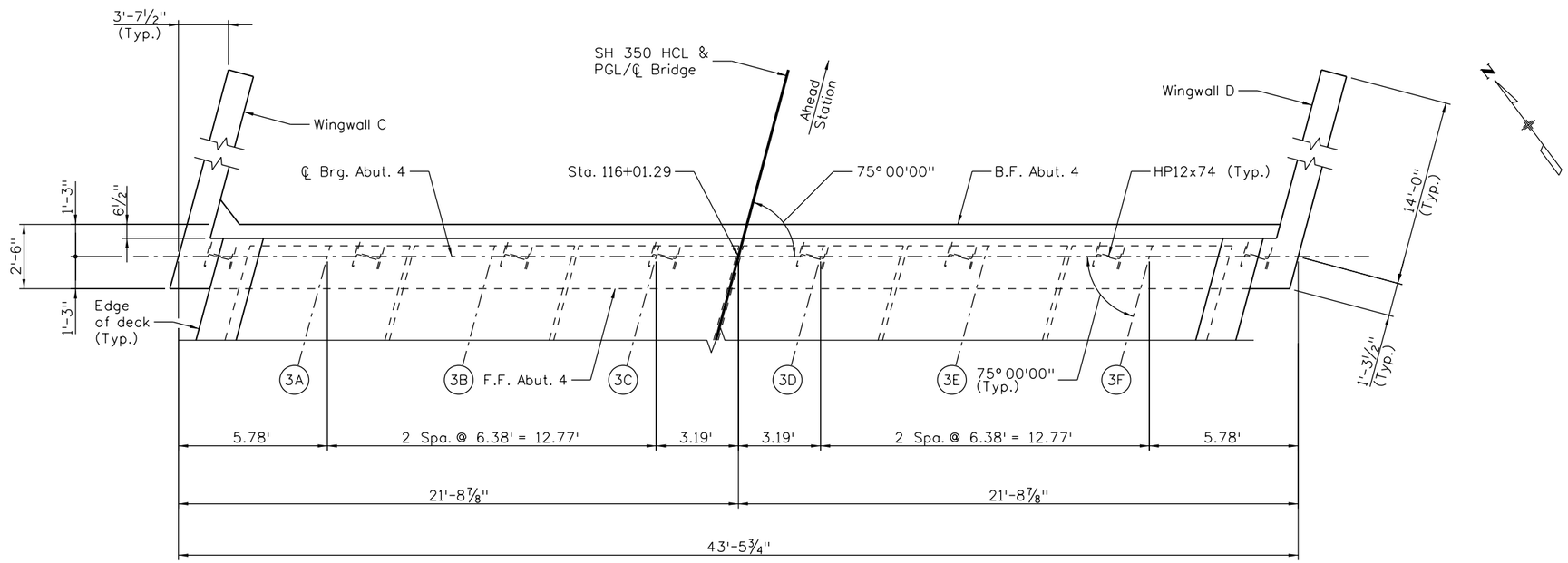

PLAN

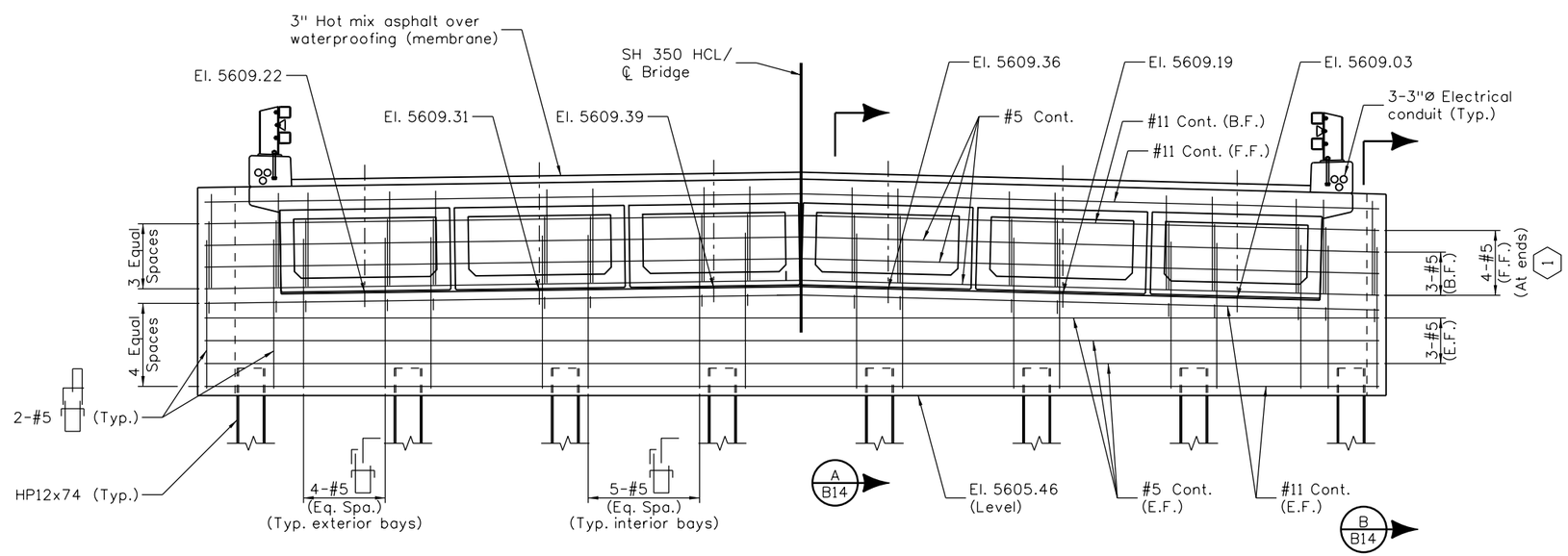

ELEVATION
(Looking ahead station)

KEYNOTES:

1. #5 in front face shall be cut to provide 2" clear to girders. #5 in back face shall be continuous for full width of abutment.

Quantities		
	INITIAL	DATE
Quantities By	JTF	11-12
Checked By	WZ	11-12

Detail		
	INITIAL	DATE
Detailed By	DET	10-12
Checked By	PP	11-12

Design		
	INITIAL	DATE
Designed By	JTF	10-12
Checked By	PP	11-12

22463 4:27:24 PM c:\projectwise\pwz_working\d0224606\18208BRDG_SH350_Abut4_01.dgn

Print Date: 12/19/2012
File Name: 18208BRDG_SH350_Abut4_01.dgn
Horiz. Scale: 1:5.3333 Vert. Scale: 1:5.3333
Staff Bridge Branch - Unit 0226 DDG

ATKINS
4601 DTC Boulevard, Suite 700
Denver, CO 80237
Phone: (303) 221-7275 Fax: (303) 221-7276

Sheet Revisions		
Date:	Comments	Init.

Colorado Department of Transportation
902 Erie Avenue
Pueblo, CO 81001
Phone: 719-546-5438 FAX: 719-546-5702
Region 2 JDH

As Constructed
No Revisions:
Revised:
Void:

SH 350 OVER PURGATOIRE RIVER
ABUTMENT 4

Designer:	J. Fuller	Structure Numbers	0-19-R
Detailer:	D. Tanner		
Sheet Subset:	Bridge	Subset Sheets: B13 of 31	

Project No./Code
FBR 3501-013
18208
Sheet Number 34

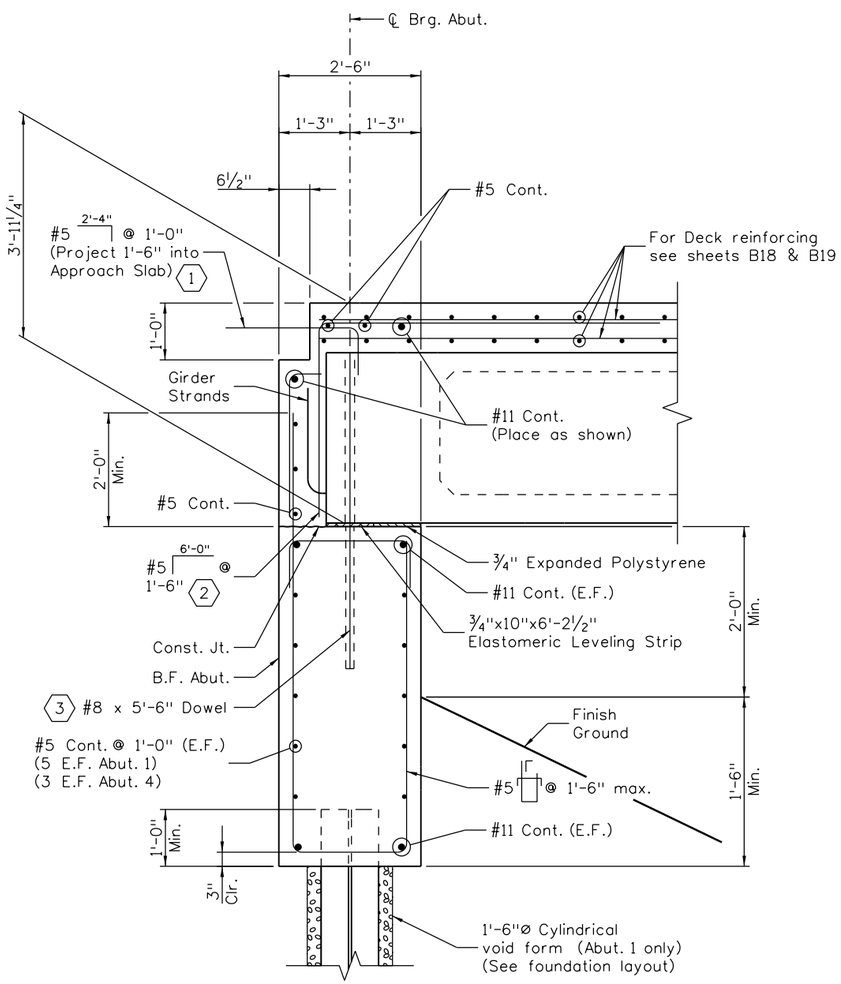

SECTION A/B14
Scale: ⅜"=1'-0"

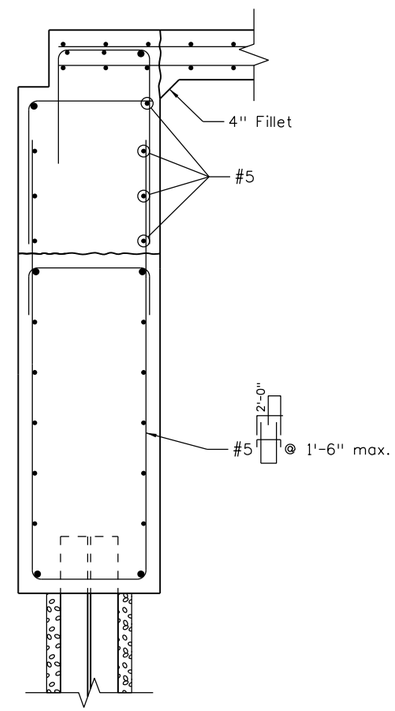

SECTION B/B14
Scale: ⅜"=1'-0"
(Similar to Section A, except as shown)

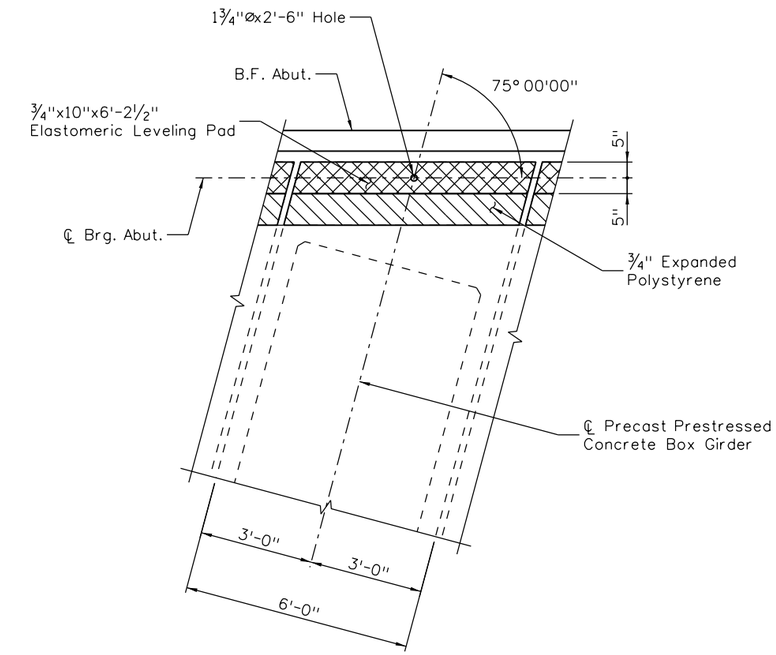

ABUTMENT BEARING SEAT DETAIL
Scale: ¼"=1'-0"

KEY NOTES:

1. Rotate leg as needed to clear girder.
2. Space with stirrups.
3. Field drill 1¾"x2'-6" hole in abutment after girder is set. Use corrugated sleeves cast in girders as template. Secure bar in place by pumping an engineer approved, two-part epoxy from the bottom of the hole to the top of girder. Payment for drilling and grouting holes shall be included in item 601 concrete class D (Bridge). See dwg. no. B20 for additional information.

NOTE:

1. Expansion material shall be included in item 601, concrete class D (Bridge).

Quantities		
	INITIAL	DATE
Quantities By	JTF	11-12
Checked By	WZ	11-12

Detail		
	INITIAL	DATE
Detailed By	CJK	10-12
Checked By	PP	11-12

Design		
	INITIAL	DATE
Designed By	JTF	10-12
Checked By	PP	11-12

22463 4:27:32 PM c:\projectwise\pwz_working\d0224606\18208BRDG_SH350_AbutDet01.dgn

Print Date: 12/19/2012
File Name: 18208BRDG_SH350_AbutDet01.dgn
Horiz. Scale: As Noted Vert. Scale: As Noted
Staff Bridge Branch - Unit 0226 DDG

ATKINS
4601 DTC Boulevard, Suite 700
Denver, CO 80237
Phone: (303) 221-7275 Fax: (303) 221-7276

Sheet Revisions		
Date:	Comments	Init.

Colorado Department of Transportation
DOT
DEPARTMENT OF TRANSPORTATION
902 Erie Avenue
Pueblo, CO 81001
Phone: 719-546-5438 FAX: 719-546-5702
Region 2 JDH

As Constructed
No Revisions:
Revised:
Void:

SH 350 OVER PURGATOIRE RIVER
ABUTMENT DETAILS

Designer: J. Fuller
Detailer: C. Kuthy
Sheet Subset: Bridge
Structure Numbers: 0-19-R
Subset Sheets: B14 of 31

Project No./Code
FBR 3501-013
18208
Sheet Number 35

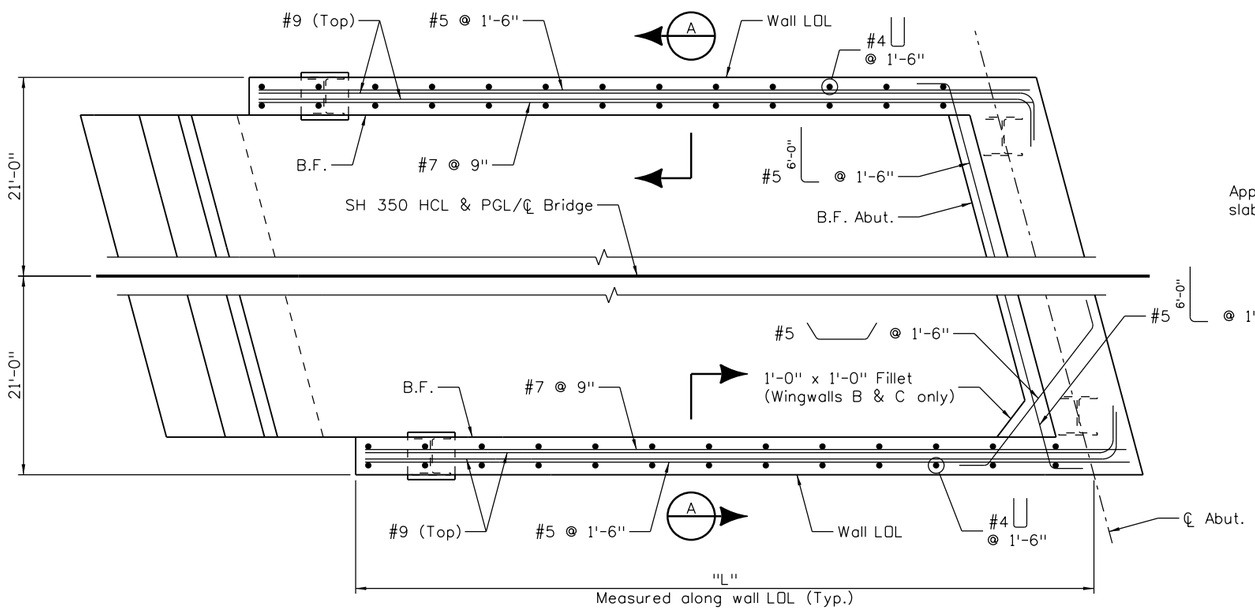

PLAN

Scale: 1/4"=1'-0"

(Wingwalls A & B shown, wingwalls C & D similar except opposite hand)

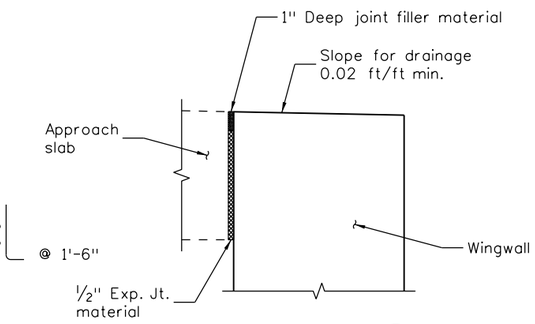

DETAIL B

Scale: 3/4"=1'-0"

2

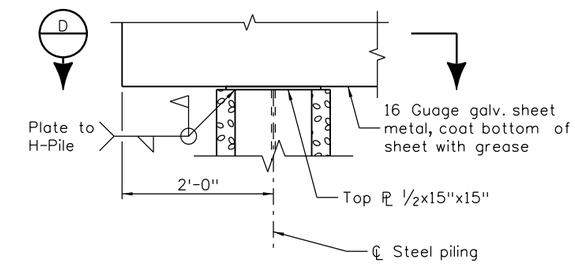

DETAIL C

Scale: 1/2"=1'-0"

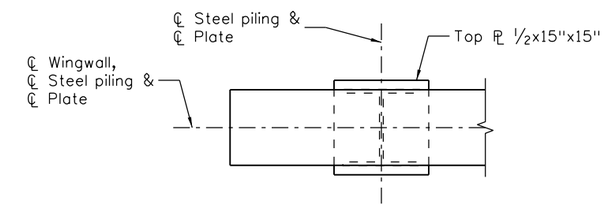

SECTION D

Scale: 1/2"=1'-0"

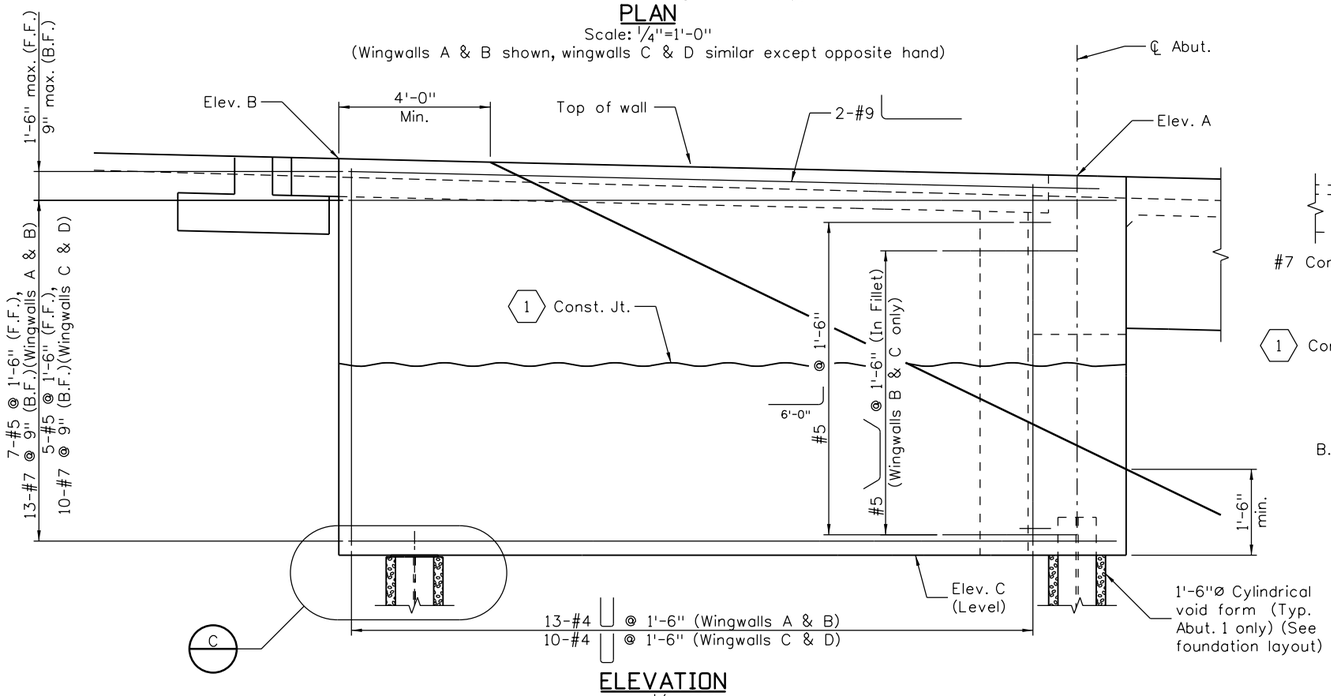

ELEVATION

Scale: 1/4"=1'-0"

(Wingwalls A & B shown, Wingwalls C & D similar except opposite hand)

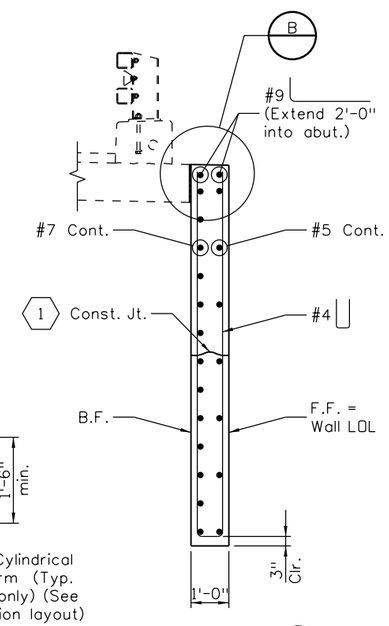

SECTION A

Scale: 1/4"=1'-0"

WINGWALL VARIABLE TABLE

Location	Elev. A	Elev. B	Elev. C	Dimension "L"
Wingwall A	5618.95	5619.40	5609.32	19'-6"
Wingwall B	5618.69	5619.14	5609.32	19'-6"
Wingwall C	5613.08	5612.76	5605.46	14'-0"
Wingwall D	5612.82	5612.50	5605.46	14'-0"

NOTES:

1. Wingwalls shall be concrete class D (Bridge).
2. Elevations shown are at wall LOL.
3. For abutment details, see sheets B12 thru B14.

KEY NOTES:

1. Construction joint is at exterior bearing elevation.
2. 1/2" expansion joint material and 1" deep joint filler material will not be paid for separately, but shall be included in item 601.

Quantities			
		INITIAL	DATE
Quantities By		JTF	11-12
Checked By		WZ	11-12

Detail			
		INITIAL	DATE
Detailed By		CJK	10-12
Checked By		PP	11-12

Design			
		INITIAL	DATE
Designed By		JTF	10-12
Checked By		PP	11-12

22463 4:27:39 PM c:\projectwise\pwz_working\d0224606\18208BRDG_SH350_Wingwall01.dgn

Print Date: 12/19/2012
File Name: 18208BRDG_SH350_Wingwall01.dgn
Horiz. Scale: As Noted Vert. Scale: As Noted
Staff Bridge Branch - Unit 0226 DDG

ATKINS
4601 DTC Boulevard, Suite 700
Denver, CO 80237
Phone: (303) 221-7275 Fax: (303) 221-7276

Sheet Revisions		
Date:	Comments	Init.

Colorado Department of Transportation
DOT
DEPARTMENT OF TRANSPORTATION
902 Erie Avenue
Pueblo, CO 81001
Phone: 719-546-5438 FAX: 719-546-5702
Region 2 JDH

As Constructed
No Revisions:
Revised:
Void:

SH 350 OVER PURGATOIRE RIVER
WINGWALL DETAILS

Designer: J. Fuller
Detailer: C. Kuthy
Sheet Subset: Bridge
Structure Numbers: 0-19-R
Subset Sheets: B15 of 31

Project No./Code
FBR 3501-013
18208
Sheet Number 36

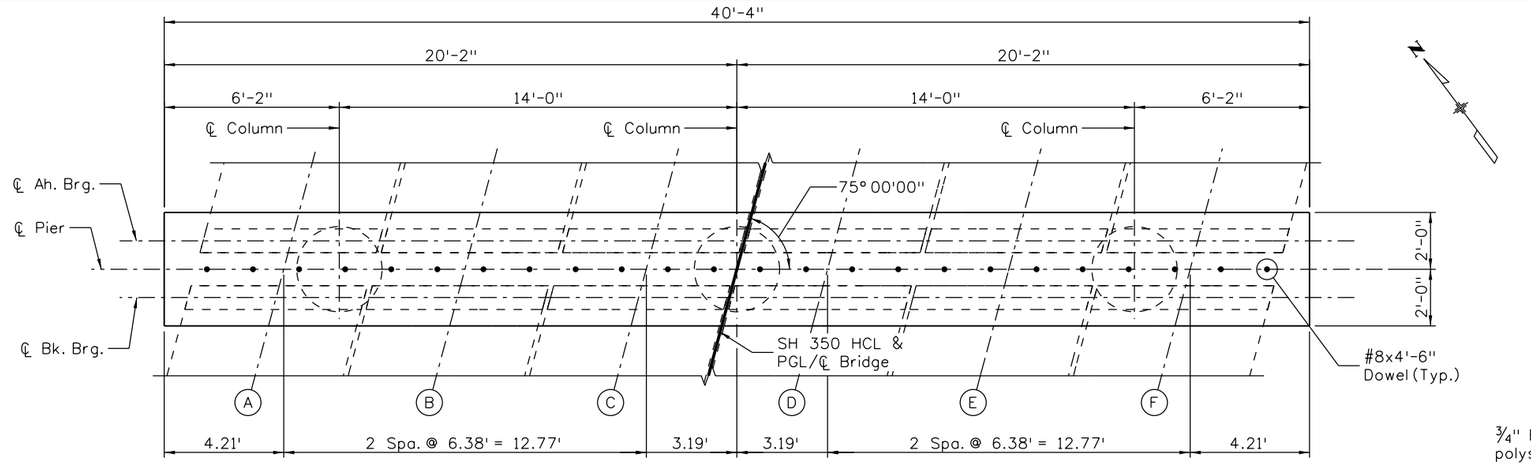

PLAN

(Pier 2 shown, Pier 3 similar)
Scale: 3/16"=1'-0"

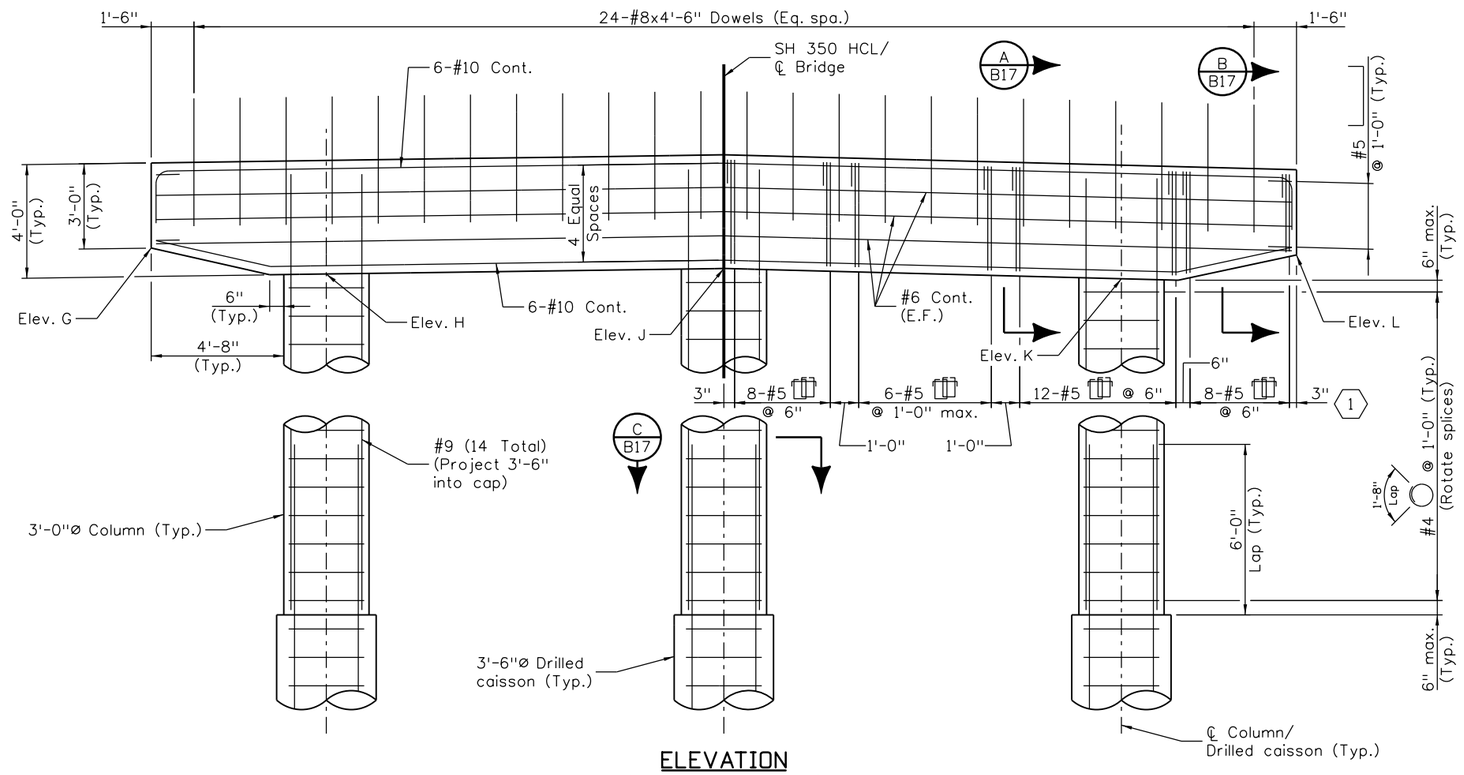

ELEVATION

(Looking Ahead Station)
Scale: 3/16"=1'-0"

BEARING SEAT ELEVATIONS TABLE

Location	A	B	C	D	E	F
Pier 2	5613.18	5613.26	5613.35	5613.31	5613.15	5612.99
Pier 3	5611.09	5611.17	5611.26	5611.22	5611.06	5610.90

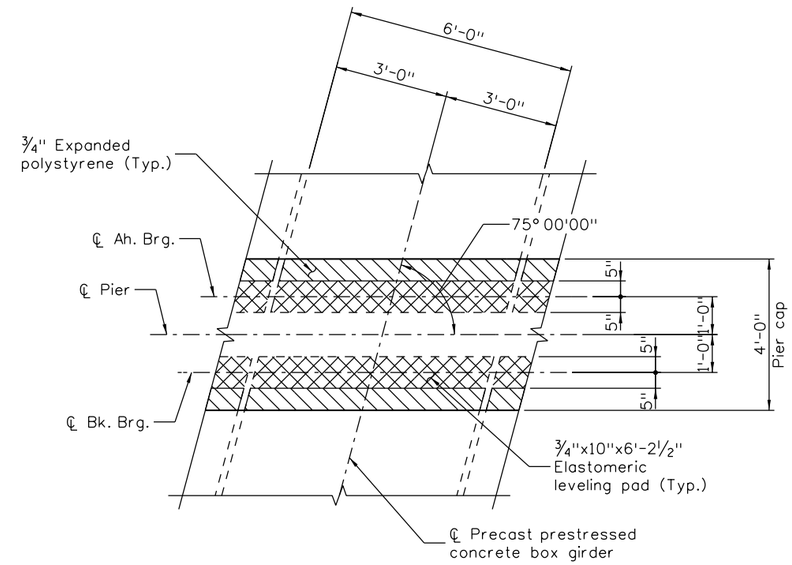

PIER BEARING SEAT DETAIL

Scale: 1/4"=1'-0"

PIER ELEVATIONS TABLE

Location	G	H	J	K	L
Pier 2	5610.16	5609.20	5609.39	5609.03	5609.95
Pier 3	5608.07	5607.11	5607.30	5606.94	5607.86

KEYNOTE:

1. Pier cap stirrup spacing is symmetrical about SH 350 HCL/℄ Bridge.

Quantities			
	INITIAL	DATE
Quantities By	JTF	11-12
Checked By	WZ	11-12

Detail			
	INITIAL	DATE
Detailed By	DET	10-12
Checked By	PP	11-12

Design			
	INITIAL	DATE
Designed By	JTF	10-12
Checked By	PP	11-12

22463 4:27:46 PM c:\projectwise\pwz_working\d0224606\18208BRDG_SH350_Pier01.dgn

Print Date: 12/19/2012
File Name: 18208BRDG_SH350_Pier01.dgn
Horiz. Scale: As Noted Vert. Scale: As Noted
Staff Bridge Branch - Unit 0226 DDG

ATKINS
4601 DTC Boulevard, Suite 700
Denver, CO 80237
Phone: (303) 221-7275 Fax: (303) 221-7276

Sheet Revisions		
Date:	Comments	Init.

Colorado Department of Transportation
DOT
DEPARTMENT OF TRANSPORTATION
902 Erie Avenue
Pueblo, CO 81001
Phone: 719-546-5438 FAX: 719-546-5702
Region 2 JDH

As Constructed
No Revisions:
Revised:
Void:

SH 350 OVER PURGATOIRE RIVER
PIERS 2 AND 3

Designer: J. Fuller
Detailer: D. Tanner
Sheet Subset: Bridge
Structure Numbers 0-19-R
Subset Sheets: B16 of 31

Project No./Code
FBR 3501-013
18208
Sheet Number 37

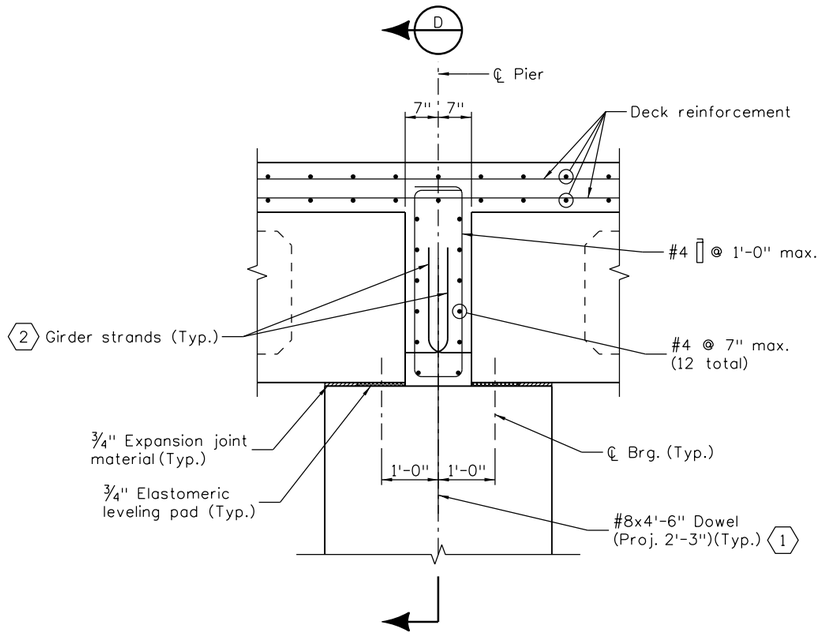

PIER DIAPHRAGM DETAIL

Scale: ⅜"=1'-0"

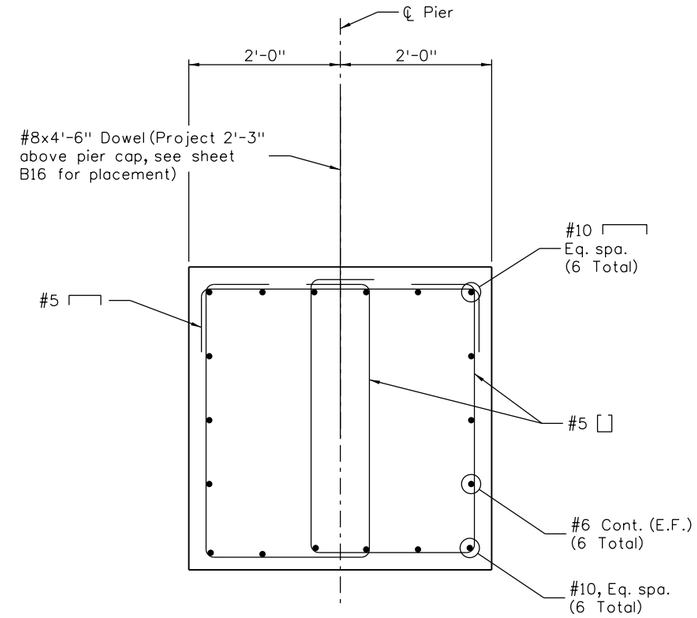

SECTION A

Scale: ½"=1'-0"

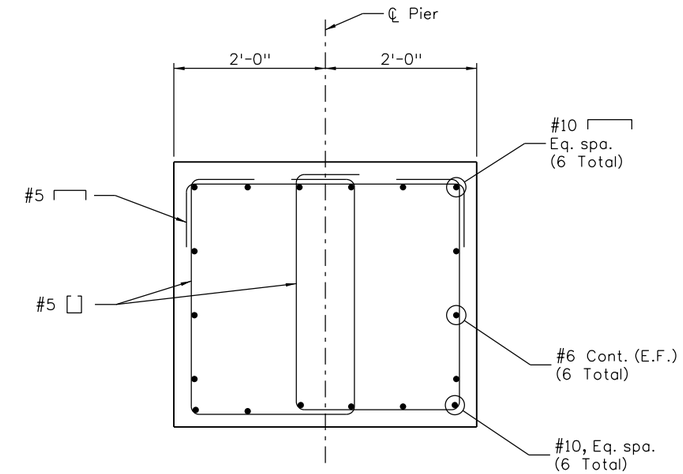

SECTION B

Scale: ½"=1'-0"

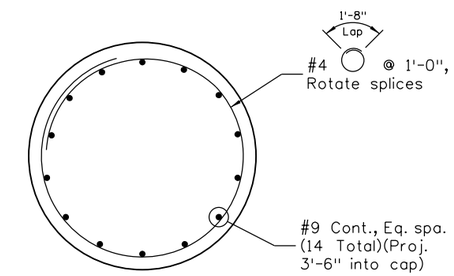

SECTION C

Scale: ½"=1'-0"

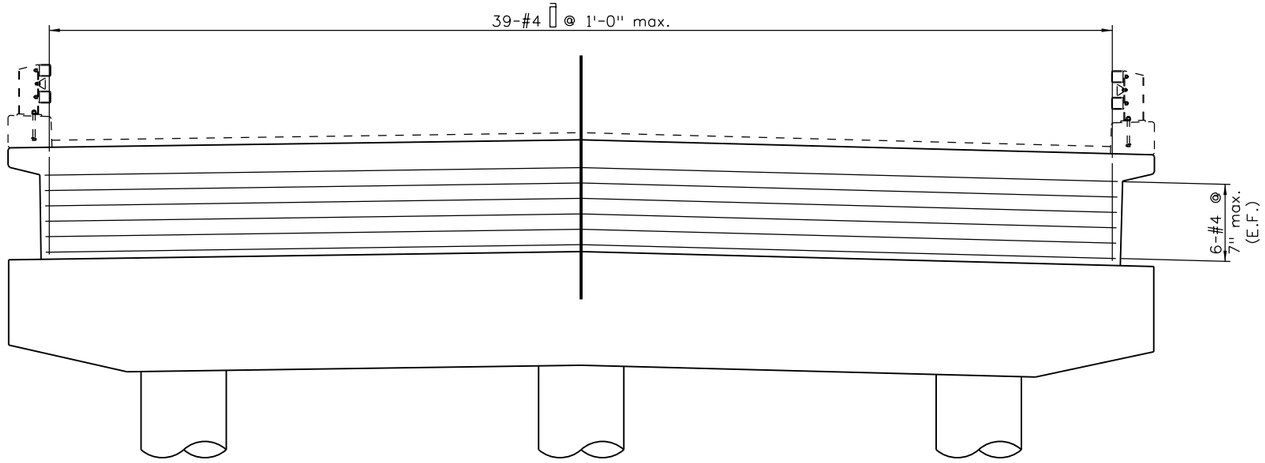

SECTION D

Scale: 3/16"=1'-0"

KEY NOTES:

1. For pier reinforcement, see dwg. no. B16.
2. For girder details, see dwg no. B20.

NOTES:

1. Pier diaphragm shall be concrete class D (Bridge).
2. Deck and Pier diaphragm shall be placed monolithically.

Quantities	INITIAL	DATE
Quantities By	JTF	11-12
Checked By	WZ	11-12

Detail	INITIAL	DATE
Detailed By	DET	10-12
Checked By	PP	11-12

Design	INITIAL	DATE
Designed By	JTF	10-12
Checked By	PP	11-12

22463 4:27:53 PM c:\projectwise\pwz_working\d0224606\18208BRDG_SH350_PierDet01.dgn

Print Date: 12/19/2012
File Name: 18208BRDG_SH350_PierDet01.dgn
Horiz. Scale: As Noted Vert. Scale: As Noted
Staff Bridge Branch - Unit 0226 DDG

ATKINS
4601 DTC Boulevard, Suite 700
Denver, CO 80237
Phone: (303) 221-7275 Fax: (303) 221-7276

Sheet Revisions

Date:	Comments	Init.

Colorado Department of Transportation
DOT
DEPARTMENT OF TRANSPORTATION
902 Erie Avenue
Pueblo, CO 81001
Phone: 719-546-5438 FAX: 719-546-5702
Region 2 JDH

As Constructed
No Revisions:
Revised:
Void:

SH 350 OVER PURGATOIRE RIVER
PIER DETAILS

Designer: J. Fuller
Detailer: D. Tanner
Sheet Subset: Bridge
Structure Numbers 0-19-R
Subset Sheets: B17 of 31

Project No./Code
FBR 3501-013
18208
Sheet Number 38

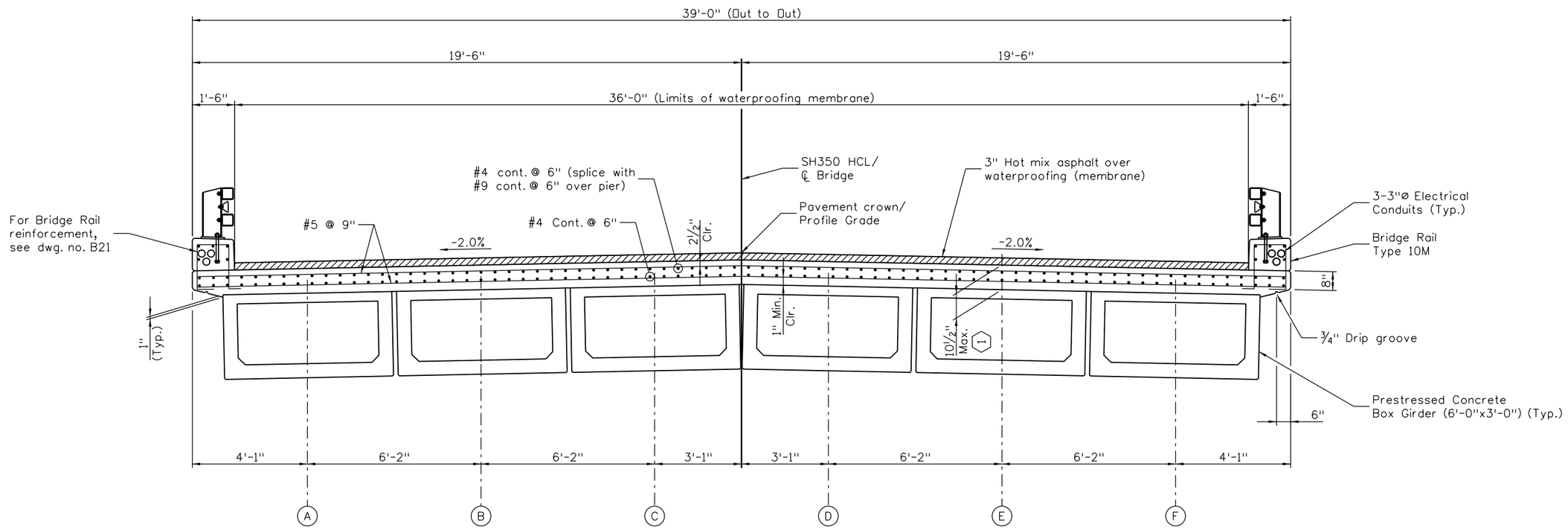

TYPICAL SECTION

(Looking ahead station)

KEY NOTE:

1. Deck thickness varies due to girder camber. 9¾" minimum at midspan, 10½" maximum at ℄ bearings.

NOTES:

1. Concrete for deck shall be concrete Class D (Bridge).
2. For deck plan, see dwg. no. B19.
3. For prestressed concrete box details, see dwg. no. B20.
4. For bridge rail type 10M details, see dwg. nos. B21 and B22.

Design				Detail				Quantities			
	INITIAL	DATE			INITIAL	DATE			INITIAL	DATE
Designed By	JTF	10-12	Detailed By	DET	10-12	Quantities By	JTF	11-12
Checked By	PP	11-12	Checked By	PP	11-12	Checked By	WZ	11-12

22463 4:28:00 PM c:\projectwise\pwz_working\d0224606\18208BRDG_SH350_DeckReinfSec01.dgn

Print Date: 12/19/2012
File Name: 18208BRDG_SH350_DeckReinfSec01.dgn
Horiz. Scale: 1:4 Vert. Scale: 1:4
Staff Bridge Branch - Unit 0226 DDG

ATKINS
4601 DTC Boulevard, Suite 700
Denver, CO 80237
Phone: (303) 221-7275 Fax: (303) 221-7276

Sheet Revisions		
Date:	Comments	Init.

Colorado Department of Transportation
DOT
DEPARTMENT OF TRANSPORTATION
902 Erie Avenue
Pueblo, CO 81001
Phone: 719-546-5438 FAX: 719-546-5702
Region 2 JDH

As Constructed
No Revisions:
Revised:
Void:

SH 350 OVER PURGATOIRE RIVER
TYPICAL DECK
REINFORCING SECTION

Designer: J. Fuller
Detailer: D. Tanner
Sheet Subset: Bridge
Structure Numbers: 0-19-R
Subset Sheets: B18 of 31

Project No./Code
FBR 3501-013
18208
Sheet Number 39

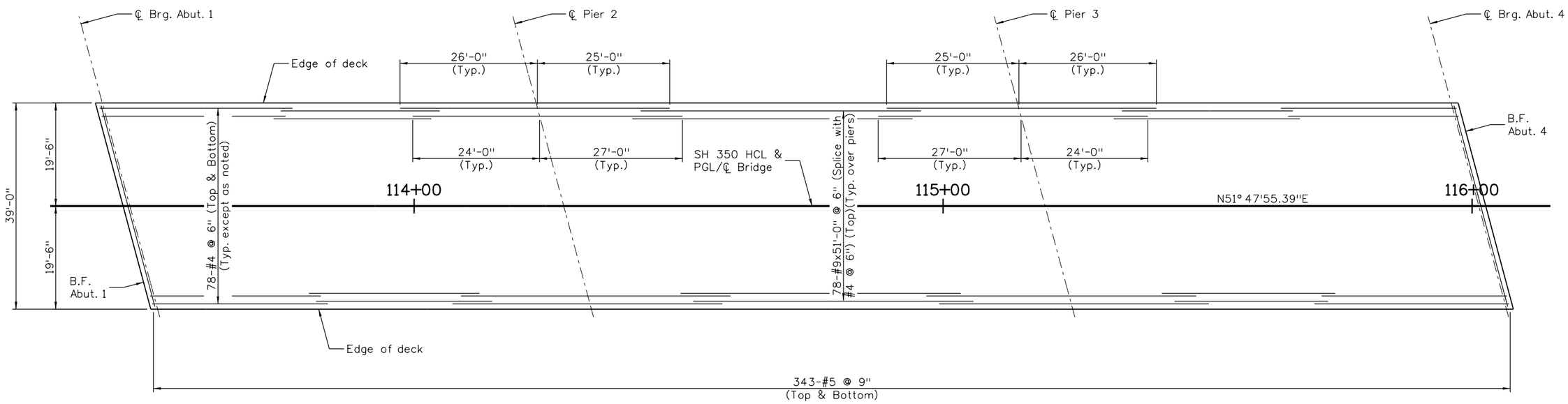

PLAN

(Bridge Rail and Bridge Rail reinforcing not shown)

NOTES:

1. Stagger splices as shown.
2. The minimum lap length for #4 bars is 2'-3".
3. The minimum lap length for #9 bars is 6'-6".

Design			Detail			Quantities		
	INITIAL	DATE		INITIAL	DATE		INITIAL	DATE
Designed By	JTF	10-12	Detailed By	CJK	10-12	Quantities By	JTF	11-12
Checked By	PP	11-12	Checked By	PP	11-12	Checked By	WZ	11-12

18026 1:26:49 PM c:\projectwise\pwz_working\d0224606\18208BRDG_SH350_DeckPlan01.dgn

Print Date: 2/1/2013
File Name: 18208BRDG_SH350_DeckPlan01.dgn
Horiz. Scale: 1:20 Vert. Scale: 1:20
Staff Bridge Branch - Unit 0226 DDG

ATKINS
4601 DTC Boulevard, Suite 700
Denver, CO 80237
Phone: (303) 221-7275 Fax: (303) 221-7276

Sheet Revisions		
Date:	Comments	Init.

Colorado Department of Transportation
DOT
DEPARTMENT OF TRANSPORTATION
902 Erie Avenue
Pueblo, CO 81001
Phone: 719-546-5438 FAX: 719-546-5702
Region 02 JDH

As Constructed
No Revisions:
Revised:
Void:

SH 350 OVER PURGATOIRE RIVER
DECK REINFORCING PLAN

Designer: J. Fuller
Detailer: C. Kuthy
Sheet Subset: Bridge
Structure Numbers: 0-19-R
Subset Sheets: B19 of 31

Project No./Code
FBR 3501-013
18208
Sheet Number 40

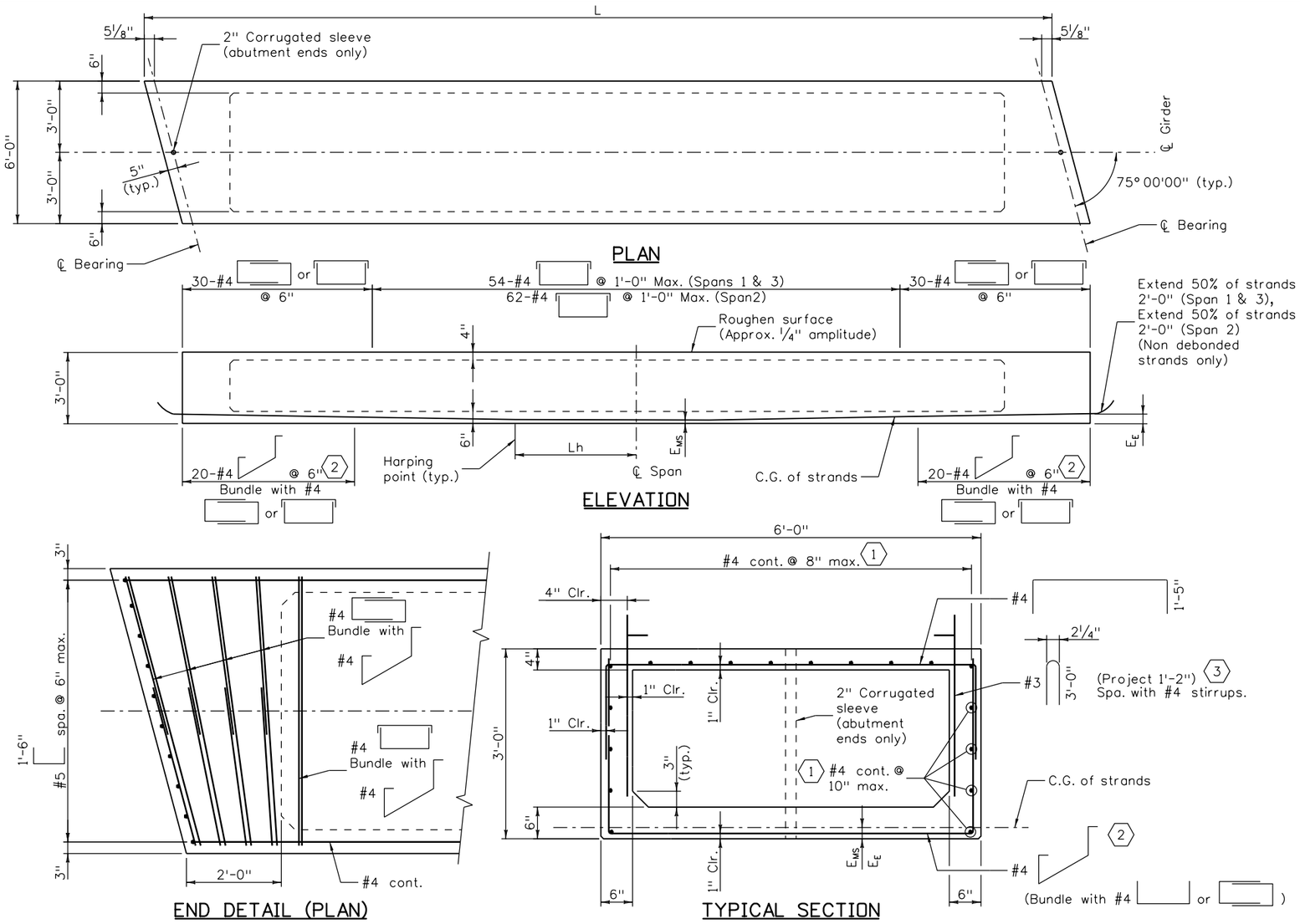

NOTES:

1. All work necessary to fabricate and install the integral parts of the girder (including the intermediate diaphragms, if any, and leveling pads), as shown on the plans, shall be included in the bid price for Item No. 618, Prestressed Concrete Box Girder (Depth 32" to 48"), with a pay unit of Sq. Ft. measured by L x W.
2. When approved by the Engineer, a minimum of tack welding will be permitted on ASTM A706 uncoated reinforcing steel.
3. Reinforcing projecting from the top of the girder and reinforcing within eight feet of an expansion device in the bridge deck shall be epoxy coated. Damaged coating on girder reinforcing need not be repaired. The minimum cover for reinforcing steel is 1".
4. Cut strands to project 3", except as shown. Do not make cosmetic repairs (damage less than 1½" deep) to the parts of the girders embedded in concrete.
5. Use low relaxation strands meeting the requirements of ASTM A-416 Grade 270. The minimum clear distance between groups or individual strands shall be $2.3(d_s)$ but not less than 1¼". The minimum cover for prestressing steel is 1½".
6. Concrete shall be Class PS.
7. Entrained air is not required for girder concrete.
8. End blocks shall be used on all girders unless otherwise noted.
9. Use ½" chamfer on all corners, except as noted.
10. Predicted camber is the camber for the girder alone at 90 days. The Contractor shall limit the camber growth to a value not to exceed the predicted camber plus 1" prior to the deck pour by weighting, scheduling fabrication, post tensioning, or other means and must report to the Engineer values of camber which exceed the predicted camber plus 1". Remedial measures, as approved by the Engineer, shall be taken if the predicted camber plus 1" is exceeded. The approved remedial measures shall be free of any adverse impact. The costs associated with all remedial measures shall be borne by the Contractor.
11. Side by side boxes placed over roads or pedestrian facilities shall not have cambers of adjacent boxes differ by more than 1" before the deck pour. Prior to placing deck reinforcing, the Contractor shall adjust this differential to within this limit by sorting the boxes to minimize differentials, or by pulling the high boxes down and low boxes up.
12. Product dimensional tolerances specified in MNL -116 Section 6.4 shall apply as specification tolerance, except that the depth (D) tolerance shall be +½", -¼".
13. The Contractor is responsible for determining necessary bracing requirements, and for providing adequate bracing for the specific wind and weather conditions to be encountered for each specific project.
14. Debonding shall vary uniformly in 2'-0" increments and shall extend a minimum of 4'-0" and a maximum of 10'-0" from end of girder. Debonding shall be symmetrical about girder centerline.
15. Welded wire fabric may be used with D20 wires in lieu of the #4 bars shown.
16. A minimum girder age of at least 90 days is required when continuity is established.
17. The precast girder fabricator is responsible for considering and mitigating any issue that can affect the as-cast girder geometry, including pouring sequence, thermal gradient/heat of hydration, rate of cure, etc..

GIRDER SCHEDULE

Span No.	Girder Letter	L (Feet)	Lh (Feet)	A_s (Square Inch)	Debonded Strands (percent)	E_E (Inch)	E_{MS} (Inch)	F_j (KIPS)	F_f (KIPS)	Concrete Strength f'_{ci} (PSI)	Concrete Strength f'_c (PSI)	Δ (Inch)	Predicted Release Camber (Inch)	Predicted Camber (Inch)
1 & 3	A & F	81.849	8.185	7.378	5.89	3.07	3.07	1494	1293	6500	8500	-2.179	1.263	2.215
1 & 3	B thru E	81.849	8.185	7.378	17.65	3.07	3.07	1494	1289	6500	8500	-1.937	1.255	2.200
2	A & F	89.816	8.982	8.246	15.79	3.20	3.20	1670	1429	6500	8500	-2.961	1.528	2.664
2	B thru E	89.816	8.982	8.246	15.79	3.20	3.20	1670	1424	6500	8500	-2.596	1.528	2.664

KEY NOTES:

1. Lightly tensioned strands may be used as an alternate.
2. Hook orientation is at the Contractors option.
3. Field bend over top mat of longitudinal slab steel.

LEGEND:

A_s = minimum area of the prestressing steel.
d_s = nominal strand diameter.
f'_s = ultimate strength of prestressing steel.
F_j = jacking force per girder.
F_f = final force per girder after all losses.
f'_{ci} = required concrete strength at release of prestress force.
f'_c = required concrete strength at 28 days of age.
L = length of girder along the grade of the girder.
Δ = deflection at centerline of span due to cast-in-place slab, asphalt, curbs and rails.

Design	INITIAL	DATE
Designed By	JTF	10-12
Checked By	PP	11-12

Detail	INITIAL	DATE
Detailed By	CJK	10-12
Checked By	PP	11-12

Quantities	INITIAL	DATE
Quantities By	JTF	11-12
Checked By	WZ	11-12

Print Date: 12/19/2012
File Name: 18208BRDG_SH350_BoxGirder01.dgn
Horiz. Scale: None Vert. Scale: None
Staff Bridge Branch - Unit 0226 DDG

ATKINS
4601 DTC Boulevard, Suite 700
Denver, CO 80237
Phone: (303) 221-7275 Fax: (303) 221-7276

Sheet Revisions		
Date:	Comments	Init.

Colorado Department of Transportation
DOT
DEPARTMENT OF TRANSPORTATION
902 Erie Avenue
Pueblo, CO 81001
Phone: 719-546-5438 FAX: 719-546-5702
Region 2 JDH

As Constructed
No Revisions:
Revised:
Void:

SH 350 OVER PURGATOIRE RIVER
PRESTRESSED CONCRETE BOX

Designer: J. Fuller
Detailer: C. Kuthy
Sheet Subset: Bridge
Structure Numbers: 0-19-R
Subset Sheets: B20 of 31

Project No./Code
FBR 3501-013
18208
Sheet Number 41

22463 4:28:15 PM c:\projectwise\pw2_working\d0224606\18208BRDG_SH350_BoxGirder01.dgn

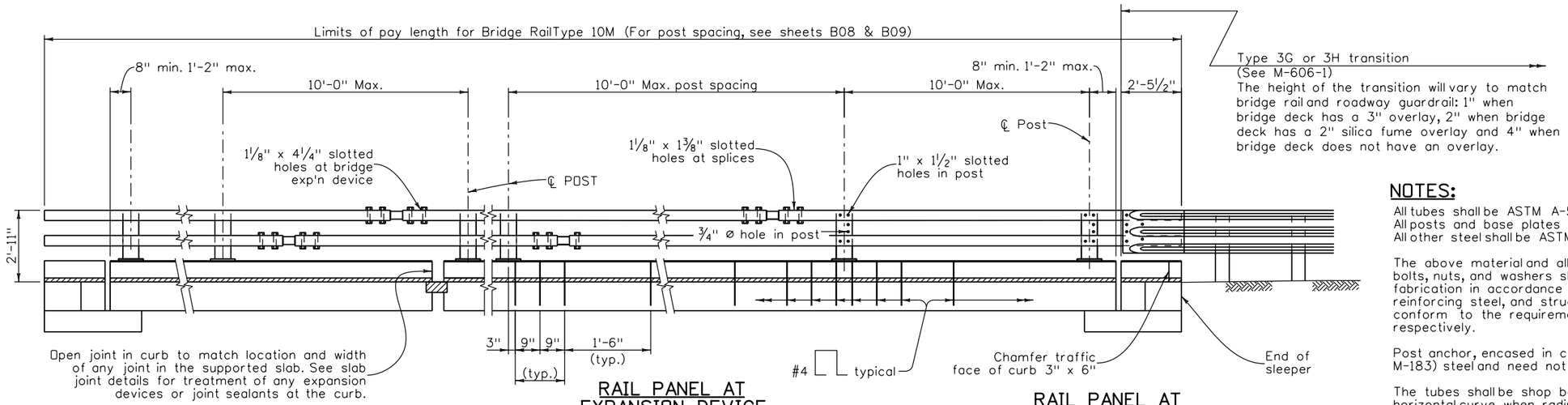

RAIL PANEL AT TERMINAL SECTION

(See Roadway plans for ends not attached to Guard Rail.)

RAIL PANEL AT EXPANSION DEVICE

ELEVATION - BRIDGE RAIL

RAIL PANEL AT TRANSITION SECTION

(See roadway plans for ends requiring attachment to guard rail.)

NOTES:

All tubes shall be ASTM A-500 Grade B.
All posts and base plates shall be ASTM A-572 Grade 50.
All other steel shall be ASTM A-36 unless otherwise noted.

The above material and all anchor bolts and miscellaneous bolts, nuts, and washers shall be galvanized after fabrication in accordance with Section 509. Concrete, reinforcing steel, and structural steel elements shall conform to the requirements of sections 601, 602 and 509, respectively.

Post anchor, encased in concrete, shall be ASTM A-36 (AASHTO M-183) steel and need not be galvanized.

The tubes shall be shop bent or fabricated to fit horizontal curve when radius is less than 1,500 feet.

Tubes shall be continuous over not less than two posts. No welded butt splices will be allowed in the tube sections.

The centerline of the tube splice shall be 1'-8" minimum and 2'-6" maximum from the centerline of the posts.

All bolts that have lock washers shall be tightened to snug only.

Posts shall be perpendicular to the longitudinal roadway grade.

One or more 10'-0" post spacings may be reduced (6'-8" min.) in order to maintain dimensions from the end of the rail and expansion joints.

Payment will be made under item 606, Bridge Rail type 10M for all posts, post anchors, base plates, backing plates, anchor bolts, miscellaneous bolts, nuts, washers, tubes, tube expansion devices, tube splices, end plates, curb concrete (Class D), curb reinforcing steel, and reflector tabs.

Prior to fabrication of this item, three sets of working drawings which comply with the requirements of section 105, shall be submitted to the Engineer for information only.

Structural Steel:

AASHTO M-183 (ASTM A-36)	f_y = 36,000 psi
AASHTO M-223 (ASTM A-572) GRADE 50	f_y = 50,000 psi
COLD FORMED ASTM A-500 GRADE B	f_y = 46,000 psi

For additional details see next rail sheets.

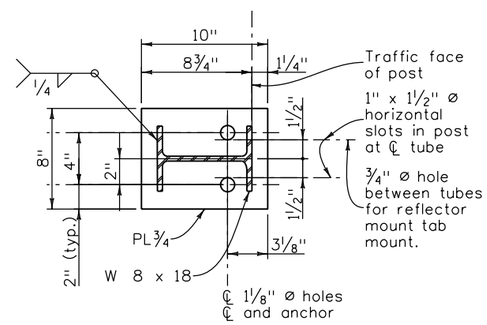

SECTION

Used when placed on concrete slab.

PLAN - POST DETAIL

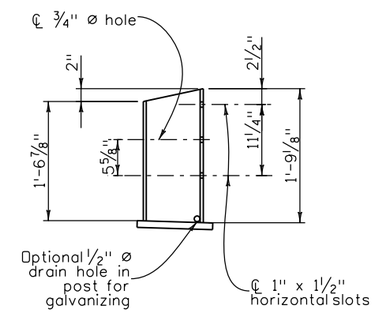

ELEVATION

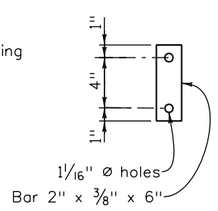

ANCHOR DETAIL

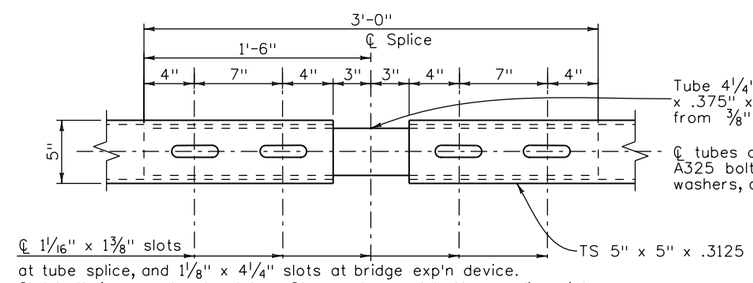

at tube splice, and 1⅛" x 4¼" slots at bridge exp'n device.
Slot both inner and outer tubes. Stagger top and bottom splices into different post spacings except at expansion joint, place at opposite ends of same post space. (Range of motion = 1'-0" at bridge expansion device.)

PLAN - TUBE SPLICE

INFORMATION ONLY

DESCRIPTION	UNIT	PER LIN. FT.
Structural Steel (Galvanized)	LB.	45.1
Concrete Class D (Bridge)	CU.YD.	.06
Reinforcing Steel (Epoxy Coated)	LB.	6.6

Quantities			
	INITIAL	DATE	
Quantities By	JTF	11-12	
Checked By	PP	11-12	

Detail			
	INITIAL	DATE	
Detailed By	DET	10-12	
Checked By	PP	11-12	

Design			
	INITIAL	DATE	
Designed By	JTF	10-12	
Checked By	PP	11-12	

22463 4:28:22 PM c:\projectwise\pwz_working\d0224606\18208BRDG_SH350_BRail10M01.dgn

Print Date: 12/19/2012
File Name: 18208BRDG_SH350_BRail10M01.dgn
Horiz. Scale: None Vert. Scale: None
Staff Bridge Branch - Unit 0226 DDG

ATKINS
4601 DTC Boulevard, Suite 700
Denver, CO 80237
Phone: (303) 221-7275 Fax: (303) 221-7276

Sheet Revisions		
Date:	Comments	Init.

Colorado Department of Transportation
DOT
DEPARTMENT OF TRANSPORTATION
902 Erie Avenue
Pueblo, CO 81001
Phone: 719-546-5438 FAX: 719-546-5702
Region 2 JDH

As Constructed
No Revisions:
Revised:
Void:

SH 350 OVER PURGATOIRE RIVER
BRIDGE RAIL TYPE 10M
(SHEET 1 OF 2)

Designer: J. Fuller
Detailer: D. Tanner
Structure Numbers: 0-19-R
Sheet Subset: Bridge
Subset Sheets: B21 of 31

Project No./Code
FBR 3501-013
18208
Sheet Number 42

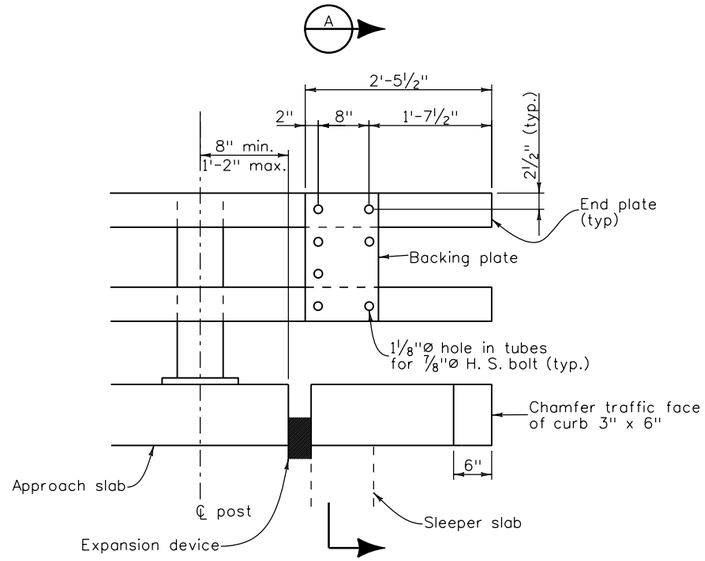

RAIL TUBE DETAILS

(Use with Bridge Rail Type 10M
Thrie beam not shown.)

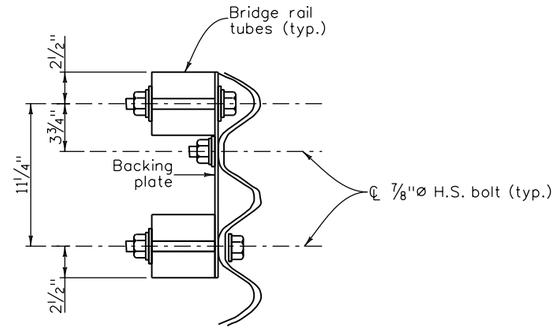

SECTION A

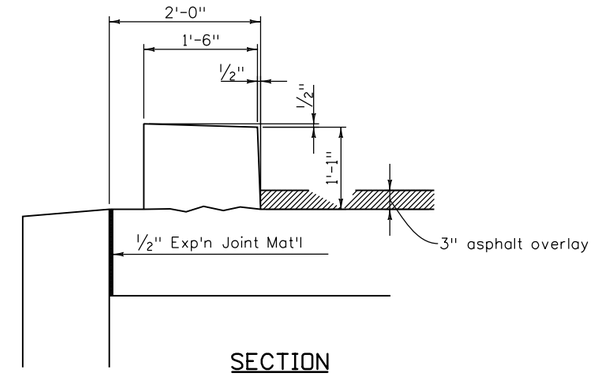

SECTION

(Use when curb is to be placed on approach slab.)

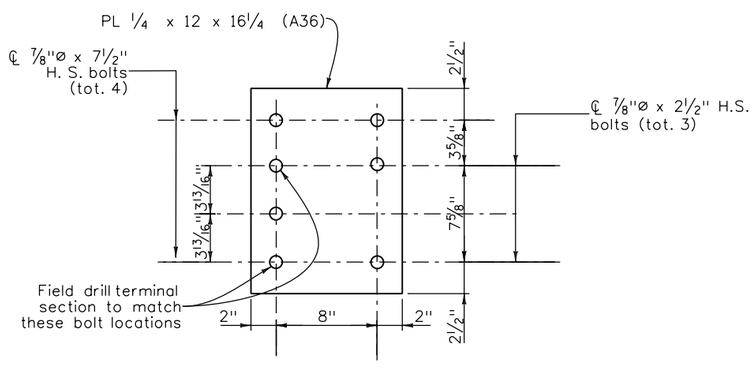

BACKING PLATE

Holes are 1⅛"Ø for ⅞"Ø H. S. bolts with hex nuts, 2 PL washers, and 1 lock washer

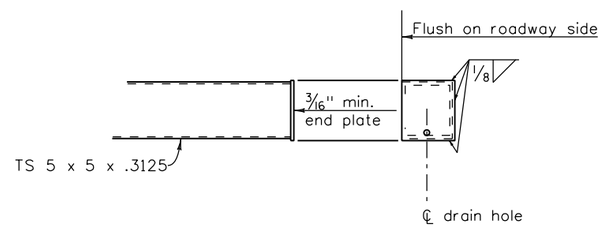

END PLATE DETAIL

Quantities		
	INITIAL	DATE
Quantities By	JTF	11-12
Checked By	WZ	11-12

Detail		
	INITIAL	DATE
Detailed By	DET	10-12
Checked By	PP	11-12

Design		
	INITIAL	DATE
Designed By	JTF	10-12
Checked By	PP	11-12

22463 4:28:29 PM c:\projectwise\pwz_working\d0224606\18208BRDG_SH350_BRail10M02.dgn

Print Date: 12/19/2012
File Name: 18208BRDG_SH350_BRail10M02.dgn
Horiz. Scale: None Vert. Scale: None
Staff Bridge Branch - Unit 0226 DDG

ATKINS
4601 DTC Boulevard, Suite 700
Denver, CO 80237
Phone: (303) 221-7275 Fax: (303) 221-7276

Sheet Revisions		
Date:	Comments	Init.

Colorado Department of Transportation
DOT
DEPARTMENT OF TRANSPORTATION
902 Erie Avenue
Pueblo, CO 81001
Phone: 719-546-5438 FAX: 719-546-5702
Region 2 JDH

As Constructed
No Revisions:
Revised:
Void:

SH 350 OVER PURGATOIRE RIVER
BRIDGE RAIL TYPE 10M
(SHEET 2 OF 2)

Designer: J. Fuller
Detailer: D. Tanner
Sheet Subset: Bridge
Structure Numbers: 0-19-R
Subset Sheets: B22 of 31

Project No./Code
FBR 3501-013
18208
Sheet Number 43

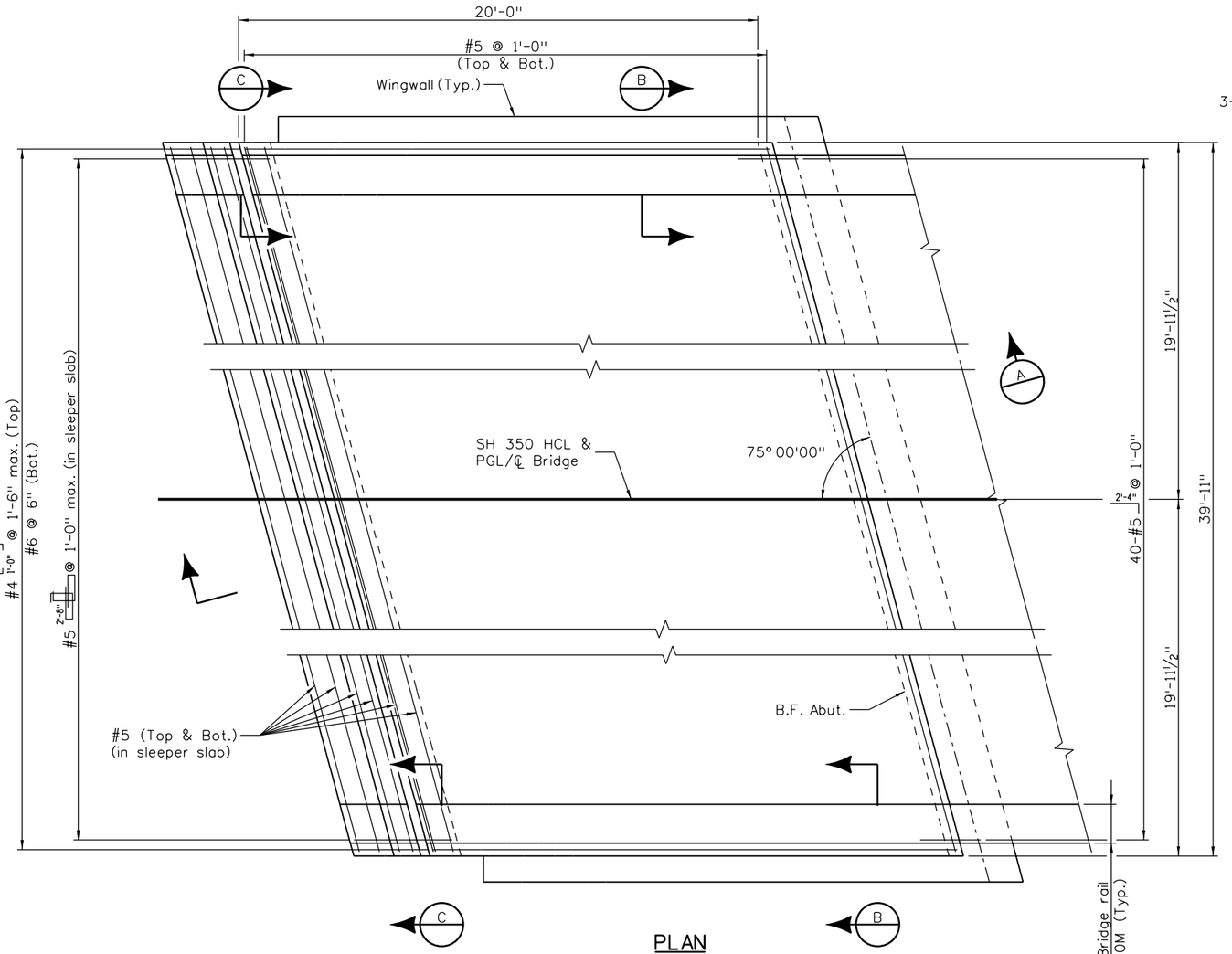

PLAN

(South Approach shown, North Approach slab similar, except opposite hand)
Scale : 3/16" = 1'-0"

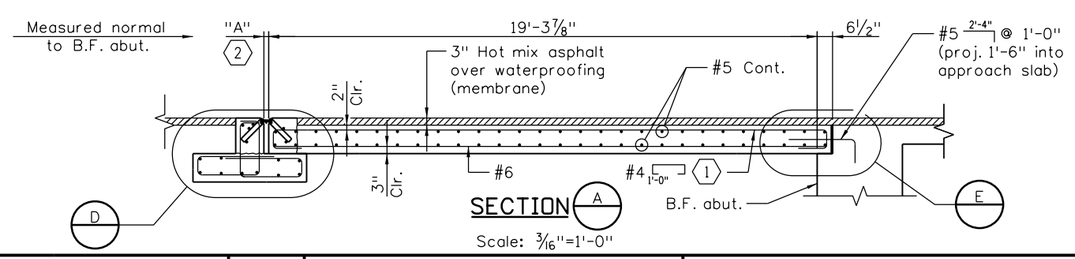

SECTION A

Scale: 3/16"=1'-0"

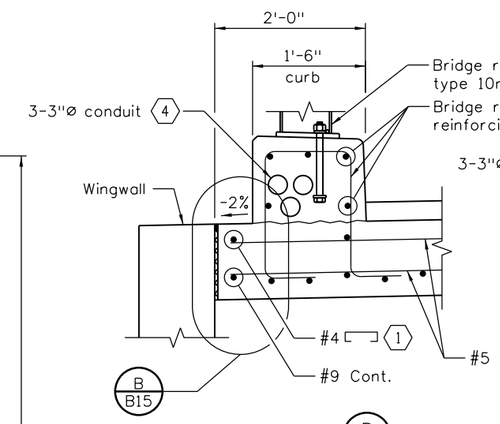

SECTION B

Scale: ½"=1'-0"

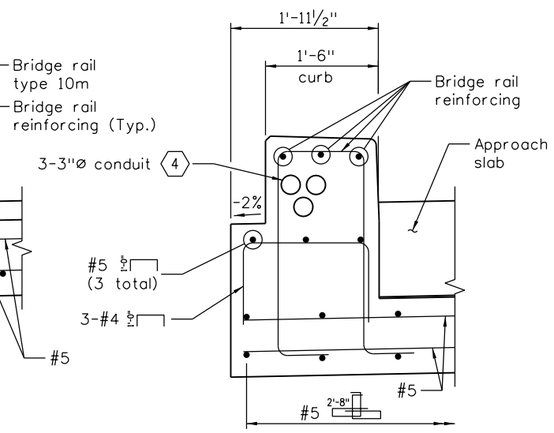

SECTION C

Scale: ½"=1'-0"

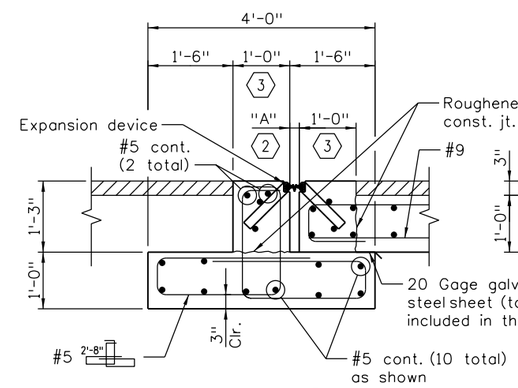

DETAIL D

Scale: 3/8"=1'-0"

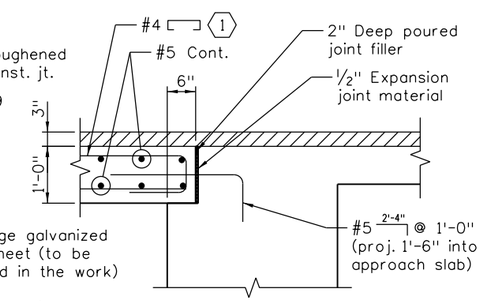

DETAIL E

Scale: 3/8"=1'-0"

NOTES:

1. Concrete shall be concrete class D (Bridge).
2. Approach slab concrete shall be cured in accordance with the specifications for bridge deck concrete in subsection 601.
3. ½" Expansion joint material shall meet AASHTO spec. M213.
4. For expansion device details, see sheets B24 & B25.
5. For curb and bridge rail details, see sheets B21 & B22.

KEY NOTES:

1. Contractor may replace with 1'-0" .
2. For dimension "A", see sheet B24.
3. Concrete surrounding expansion device shall be placed after expansion device has been adjusted to proper grade and accepted by the engineer.
4. Provide expansion/contraction couplers at bridge expansion devices.

Quantities		
	INITIAL	DATE
Quantities By	JTF	11-12
Checked By	WZ	11-12

Detail		
	INITIAL	DATE
Detailed By	DET	10-12
Checked By	PP	11-12

Design		
	INITIAL	DATE
Designed By	JTF	10-12
Checked By	PP	11-12

22463 4:28:37 PM c:\projectwise\pwz_working\d0224606\18208BRDG_SH350_AppSlab01.dgn

Print Date: 12/19/2012
File Name: 18208BRDG_SH350_AppSlab01.dgn
Horiz. Scale: As Noted Vert. Scale: As Noted
Staff Bridge Branch - Unit 0226 DDG

ATKINS
4601 DTC Boulevard, Suite 700
Denver, CO 80237
Phone: (303) 221-7275 Fax: (303) 221-7276

Sheet Revisions		
Date:	Comments	Init.

Colorado Department of Transportation
DOT
DEPARTMENT OF TRANSPORTATION
902 Erie Avenue
Pueblo, CO 81001
Phone: 719-546-5438 FAX: 719-546-5702
Region 2 JDH

As Constructed
No Revisions:
Revised:
Void:

SH 350 OVER PURGATOIRE RIVER
APPROACH SLAB DETAILS

Designer:	J. Fuller	Structure Numbers	0-19-R
Detailer:	D. Tanner		
Sheet Subset:	Bridge	Subset Sheets: B23 of 31	

Project No./Code
FBR 3501-013
18208
Sheet Number 44

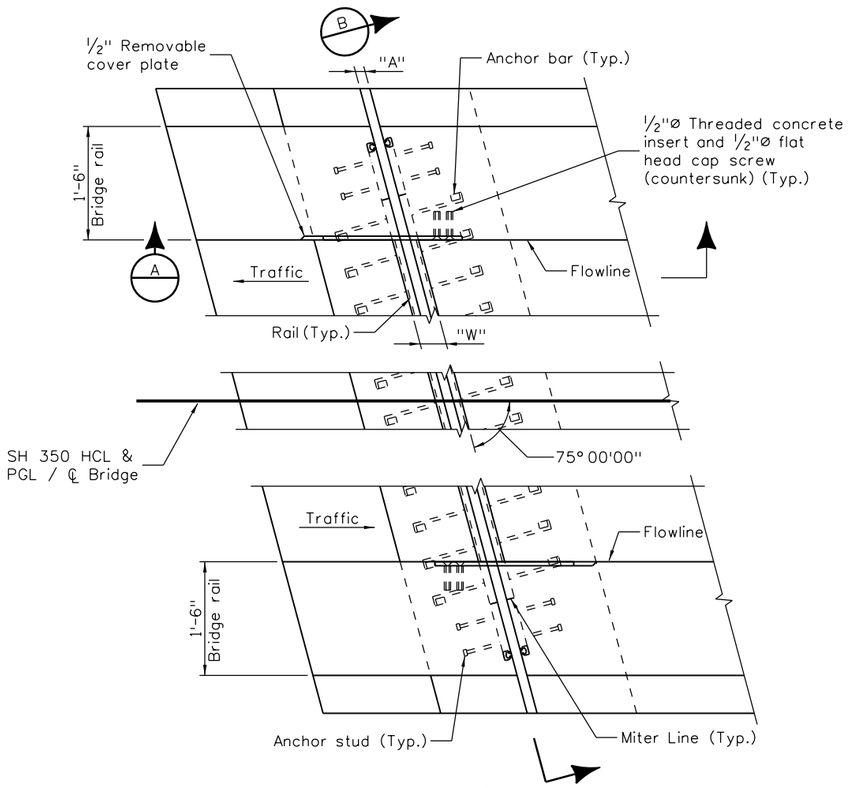

PLAN

Scale: ½" = 1'-0"

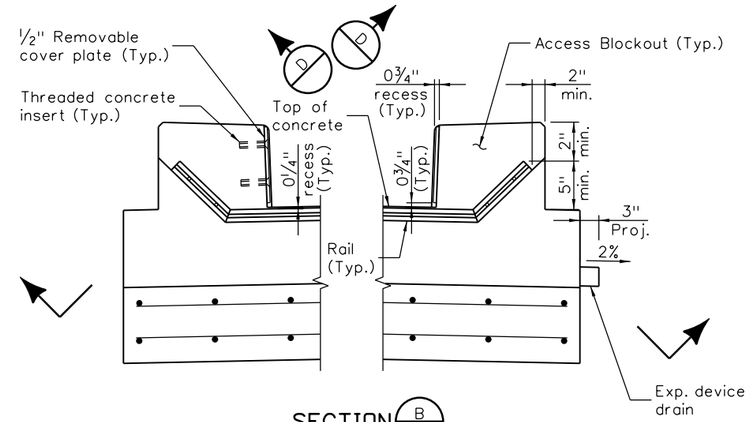

SECTION B

Scale: ½" = 1'-0"

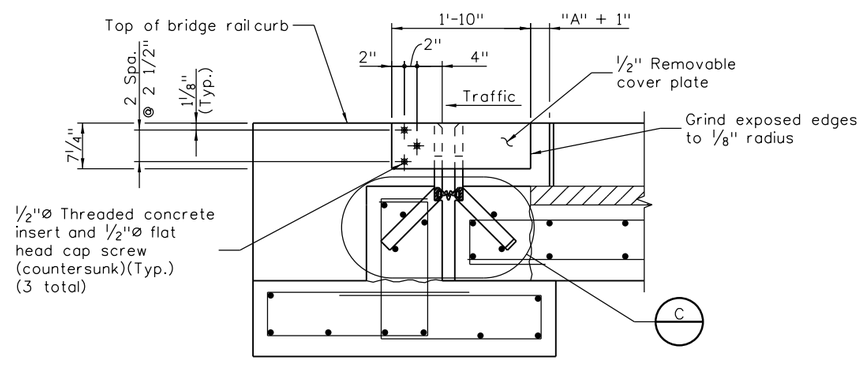

SECTION A

Scale: ½" = 1'-0"

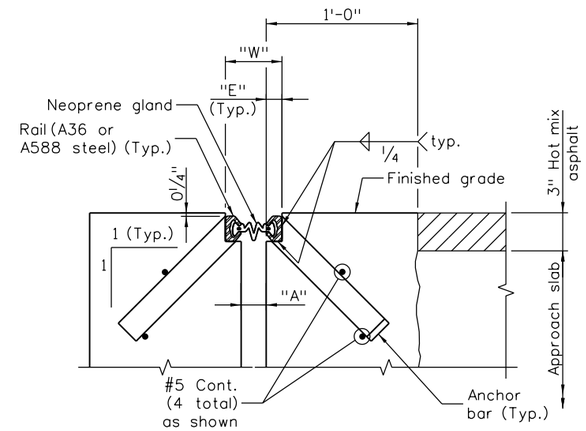

DETAIL C

Scale: 1" = 1'-0"

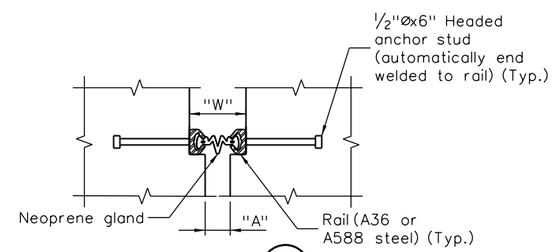

SECTION D

Scale: 1" = 1'-0"

(For information not shown, see "Detail C")

VARIABLE TABLE

STR. Temp	"A"	"W"
-30° F	2.34"	3.59"
0° F	2.07"	3.32"
30° F	1.81"	3.06"
60° F	1.54"	2.79"
90° F	1.27"	2.52"
120° F	1"	2.25"

* For "E" = 1¼" (Min.)

NOTES:

1. Provide expansion device support as shown at 6'-0" intervals.
2. The expansion device shall be installed on grade, parallel to the slope and grade of the deck.
3. After the concrete has attained initial set, the attachments used to hold the expansion device assembly in it's proper position shall be removed.
4. All cover plates and concrete inserts shall be galvanized and shall be included in item 518, bridge expansion device (0-4 inch).
5. Do not paint steel surfaces in contact with either concrete or seal.
6. "W" and "E" dimensions are dependant upon the particular expansion device supplied, and shall be shown on the shop drawings. "E" = 1¼" min.
7. Cover plates shall be recessed ¼" inside face of concrete.
8. The neoprene gland shall be installed in one piece in accordance with section 518 of the standard specifications.
9. See section 518 in the standard specifications for water tight integrity testing requirements.
10. Provide 2" minimum clear cover from concrete surfaces to anchor bars and anchor studs.
11. Cost of drain shall be included in the work.
12. For approach slab and sleeper slab details, see sheet B23.
13. For additional expansion device information, see sheet B25.
14. Expansion device drain shall not be paid for separately, but shall be included in the work.

ACCEPTABLE ALTERNATES

D.S. BROWN A2R400-SSA2
WABO SE400 TYPE A
EPOXY ENGINEERED MATERIALS S400-A STRIP SEAL

Quantities	INITIAL	DATE
Quantities By	JTF	11-12
Checked By	WZ	11-12

Detail	INITIAL	DATE
Detailed By	JML	10-12
Checked By	PP	11-12

Design	INITIAL	DATE
Designed By	JTF	10-12
Checked By	PP	11-12

22463 4:28:45 PM c:\projectwise\pwz_working\d0224606\18208BRDG_SH350_ExpDev01.dgn

Print Date: 12/19/2012
File Name: 18208BRDG_SH350_ExpDev01.dgn
Horiz. Scale: As Noted Vert. Scale: As Noted
Staff Bridge Branch - Unit 0226 DDG

ATKINS
4601 DTC Boulevard, Suite 700
Denver, CO 80237
Phone: (303) 221-7275 Fax: (303) 221-7276

Sheet Revisions		
Date:	Comments	Init.

Colorado Department of Transportation
DOT
DEPARTMENT OF TRANSPORTATION
902 Erie Avenue
Pueblo, CO 81001
Phone: 719-546-5438 FAX: 719-546-5702
Region 2 JDH

As Constructed
No Revisions:
Revised:
Void:

SH 350 OVER PURGATOIRE RIVER BRIDGE EXPANSION DEVICE (0-4 INCH) (SHEET 1 OF 2)

Designer: J. Fuller
Detailer: J. Lukas
Sheet Subset: Bridge
Structure Numbers: 0-19-R
Subset Sheets: B24 of 31

Project No./Code
FBR 3501-013
18208
Sheet Number 45

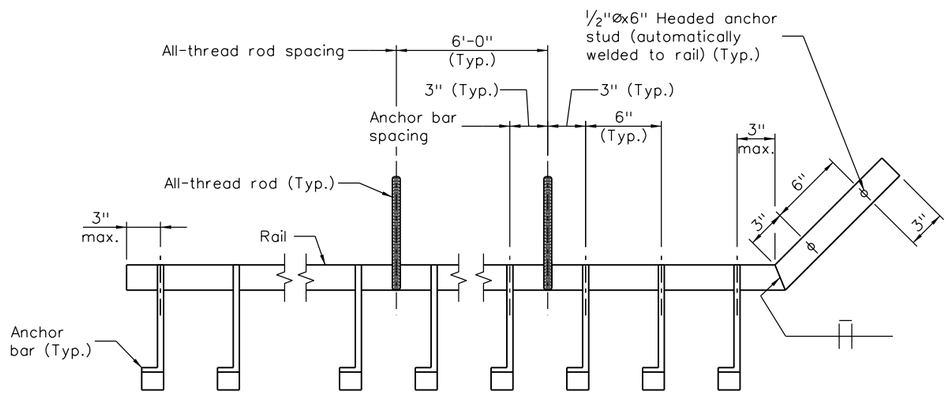

PARTIAL RAIL ELEVATION

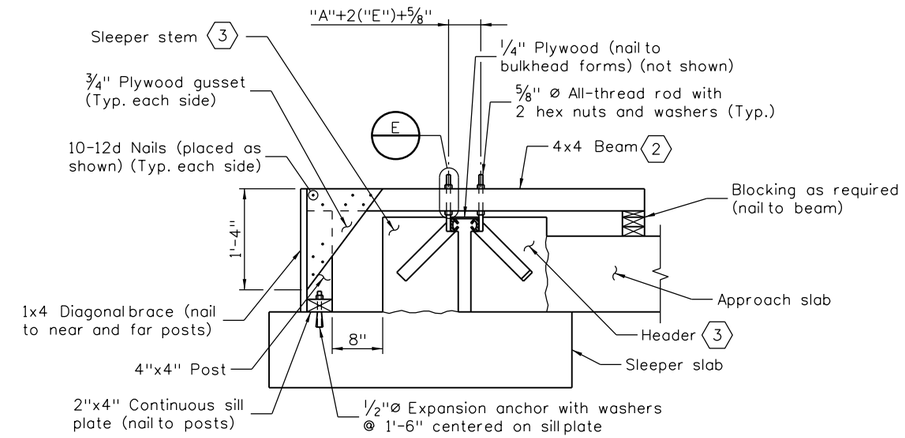

MINIMUM SUPPORT BRACKET REQUIREMENTS

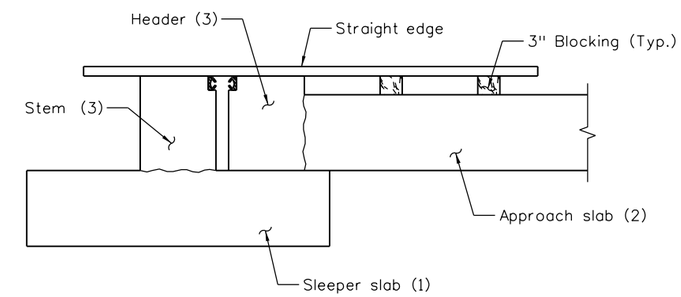

SUGGESTED GRADE PROJECTION SCHEME

(Numbers in parenthesis refer to first, second and third concrete pours.)

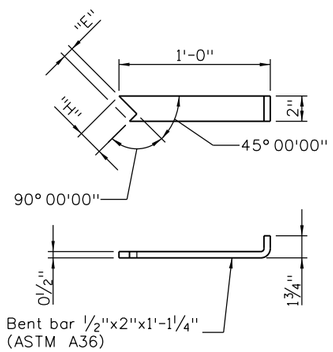

ANCHOR BAR DETAIL

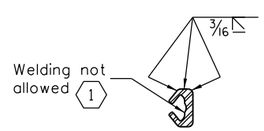

RAIL FIELD SPLICE DETAIL

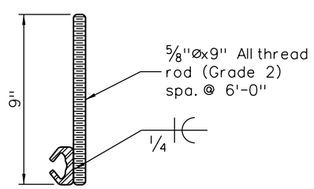

DETAIL E

NOTES:

1. For additional notes and details, see sheet B24.

KEY NOTES:

1. Welding of interior surfaces of the rail in contact with the neoprene gland will not be permitted.
2. Provide beam at 6'-0" intervals. provide 3/4"Ø holes in support frame for 5/8"Ø all-thread rods. Cut all-threaded rods flush with top of concrete for finished joint.
3. Concrete for stem and header shall be placed after expansion device has been adjusted to proper grade and approved by the engineer using the "suggested grade projection scheme", this sheet.

Quantities	INITIAL	DATE
Quantities By	JTF	11-12
Checked By	WZ	11-12

Detail	INITIAL	DATE
Detailed By	JML	10-12
Checked By	PP	11-12

Design	INITIAL	DATE
Designed By	JTF	10-12
Checked By	PP	11-12

22463 4:28:52 PM c:\projectwise\pwz_working\d0224606\18208BRDG_SH350_ExpDev02.dgn

Print Date: 12/19/2012
File Name: 18208BRDG_SH350_ExpDev02.dgn
Horiz. Scale: None Vert. Scale: None
Staff Bridge Branch - Unit 0226 DDG

ATKINS
4601 DTC Boulevard, Suite 700
Denver, CO 80237
Phone: (303) 221-7275 Fax: (303) 221-7276

Sheet Revisions		
Date:	Comments	Init.

Colorado Department of Transportation
DOT
DEPARTMENT OF TRANSPORTATION
902 Erie Avenue
Pueblo, CO 81001
Phone: 719-546-5438 FAX: 719-546-5702
Region 2 JDH

As Constructed
No Revisions:
Revised:
Void:

SH 350 OVER PURGATOIRE RIVER BRIDGE EXPANSION DEVICE (0-4 INCH) (SHEET 2 OF 2)

Designer:	J. Fuller	Structure Numbers	0-19-R
Detailer:	J. Lukas		
Sheet Subset:	Bridge	Subset Sheets: B25 of 31	

Project No./Code
FBR 3501-013
18208
Sheet Number 46

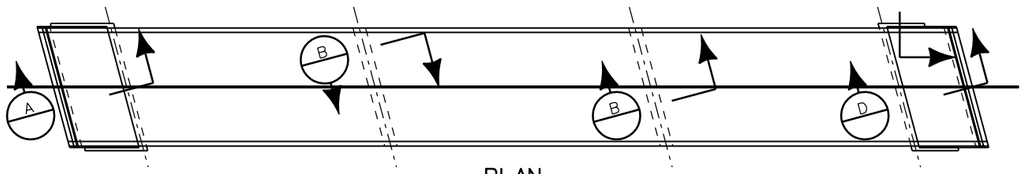

PLAN

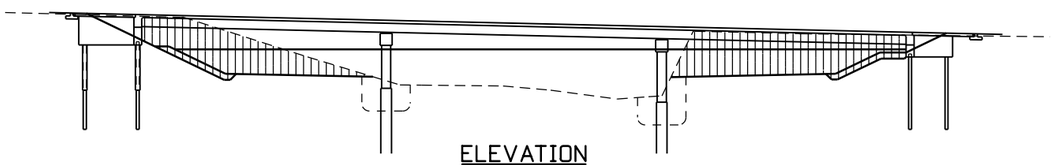

ELEVATION

NOTES:

1. Unless shown otherwise in the plans, this drawing gives the minimum extent of Structure Excavation and Structure Backfill. The Contractor may elect to extend the Structure Excavation and Structure Backfill beyond the limits shown here. Any additional Excavation or Backfill beyond these limits will not be measured nor paid for.
2. Structure footings which are located in rock shall be poured out to undisturbed rock, without forming, in conformance with 601.09.

ABBREVIATIONS

O.G.	Original Ground
P.S.	Plan Subgrade
F.S.	Plan Finished Surface

LEGEND

- Roadway Excavation
- Structure Excavation
- Structure Backfill (Flow-Fill), or Structure Backfill (Class 1) with Mechanical Reinforcement of Soil, as shown elsewhere in the plans.
- Structure Backfill (Class 2)
- Filter Material

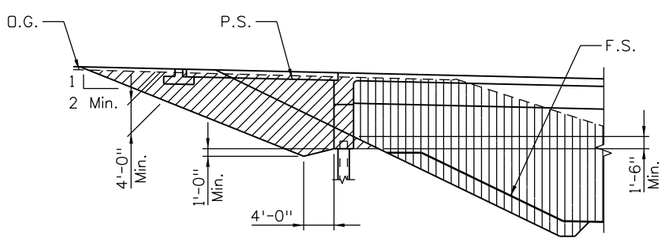

SECTION A (Excavation)

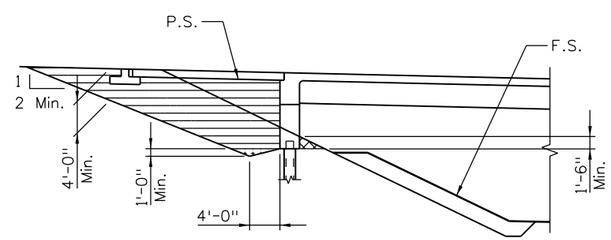

SECTION A (Backfill)

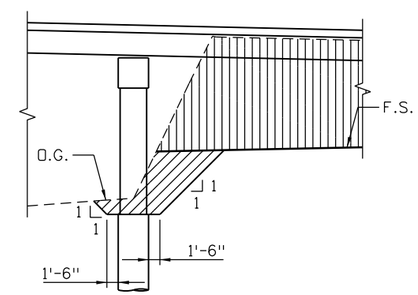

SECTION B (Excavation)

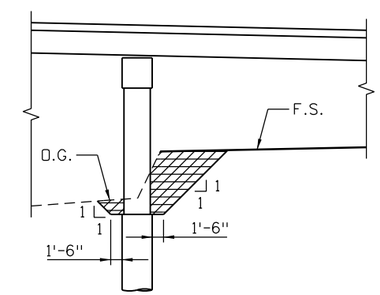

SECTION B (Backfill)

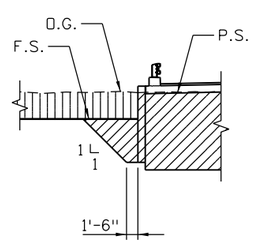

SECTION C (Excavation) Near B.F. Abut.

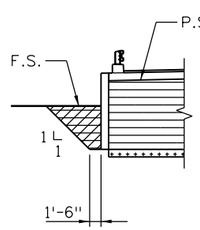

SECTION C (Backfill) Near B.F. Abut.

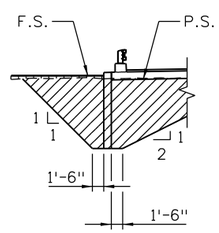

SECTION C (Excavation) Near end of wingwall

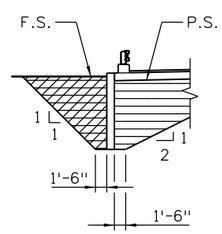

SECTION C (Backfill) Near end of wingwall

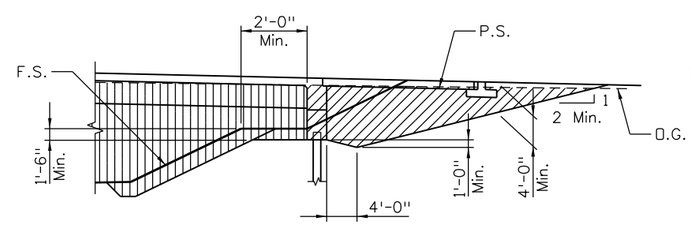

SECTION D (Excavation)

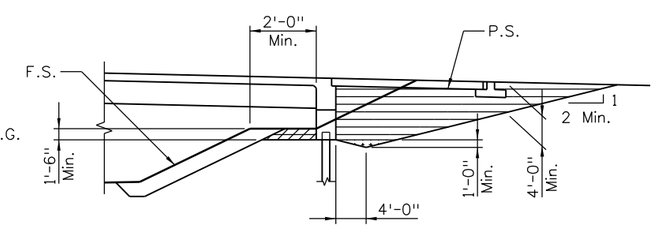

SECTION D (Backfill)

Quantities	INITIAL	DATE
Quantities By	JTF	11-12
Checked By	WZ	11-12

Detail	INITIAL	DATE
Detailed By	CJK	10-12
Checked By	PP	11-12

Design	INITIAL	DATE
Designed By	JTF	10-12
Checked By	PP	11-12

22463 4:29:00 PM c:\projectwise\pwz_working\d0224606\18208BRDG_SH350_ExBkfill01.dgn

Print Date: 12/19/2012
File Name: 18208BRDG_SH350_ExBkfill01.dgn
Horiz. Scale: None Vert. Scale: None
Staff Bridge Branch - Unit 0226 DDG

ATKINS
4601 DTC Boulevard, Suite 700
Denver, CO 80237
Phone: (303) 221-7275 Fax: (303) 221-7276

Sheet Revisions		
Date:	Comments	Init.

Colorado Department of Transportation
DOT
DEPARTMENT OF TRANSPORTATION
902 Erie Avenue
Pueblo, CO 81001
Phone: 719-546-5438 FAX: 719-546-5702
Region 2 JDH

As Constructed
No Revisions:
Revised:
Void:

SH 350 OVER PURGATOIRE RIVER
EXCAVATION AND BACKFILL

Designer: J. Fuller
Detailer: C. Kuthy
Sheet Subset: Bridge
Structure Numbers: 0-19-R
Subset Sheets: B26 of 31

Project No./Code
FBR 3501-013
18208
Sheet Number 47

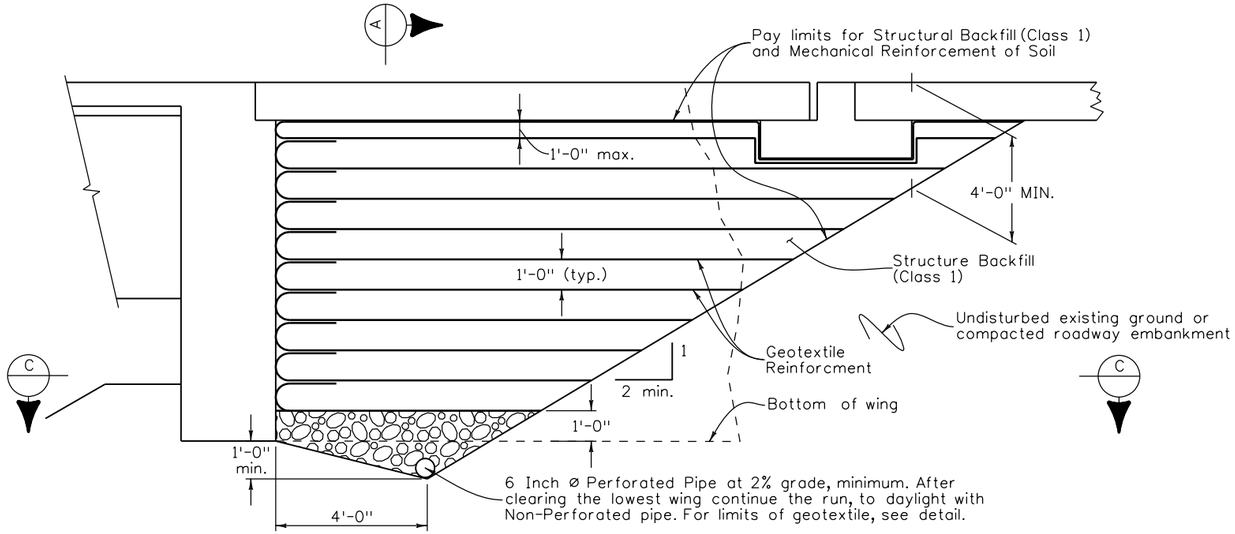

SECTION PERPENDICULAR TO ABUTMENT

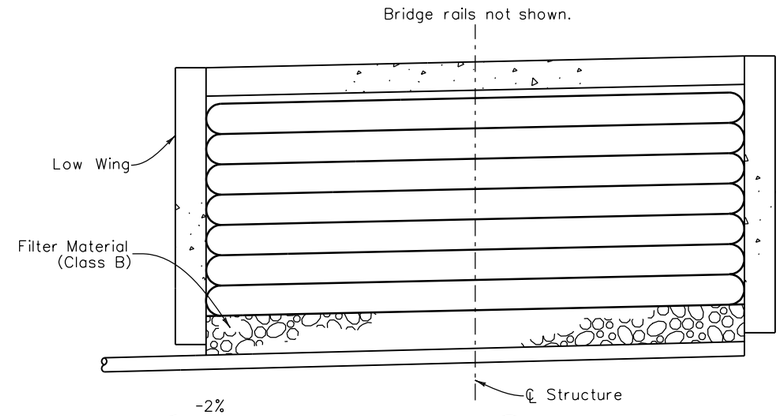

SECTION A

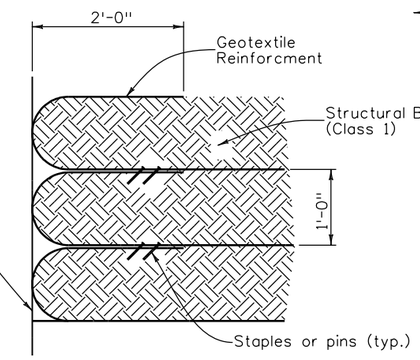

WRAP DETAIL

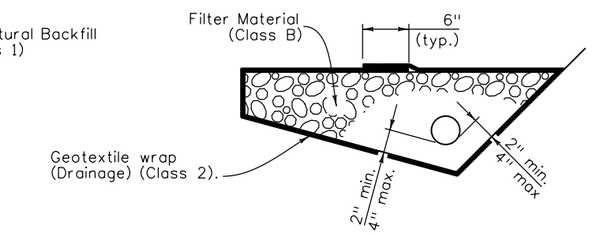

6 INCH PERFORATED PIPE UNDERDRAIN

6 Inch Perforated Pipe Underdrain includes all Filter Material (Class B) and Geotextile wrap (Drainage) (Class 2).

For steel structures longer then 300' without expansion devices between abutments and for abutments greater then 12' high, provide gap between the abutment and backfill. The gap width shall be at least 0.5% of the abutment height, 1" minimum. See Gap Detail 1 and 2. Do not provide this gap at bottom 2 nor the top 2 layers of Reinforced Soil.

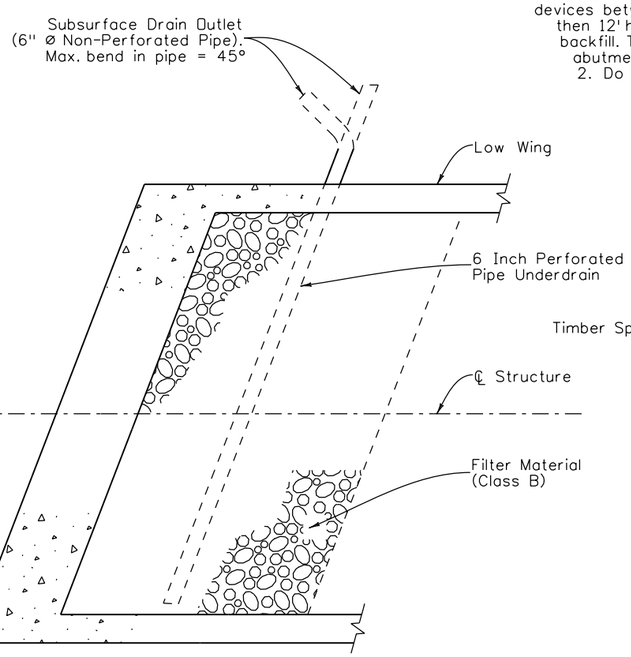

SECTION C

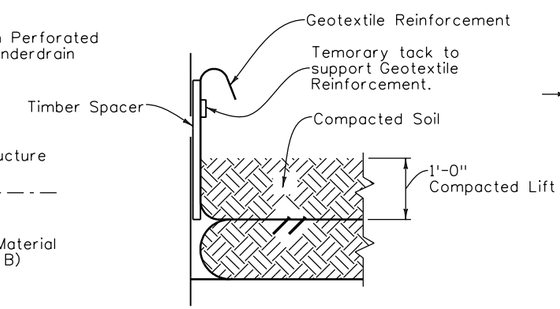

GAP DETAIL STEP 1

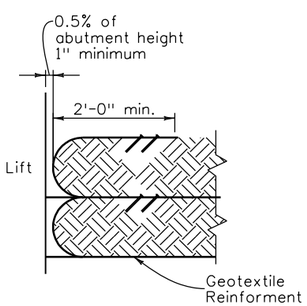

GAP DETAIL STEP 2

When required, the Geotextile Reinforcement wrap at Back Face of Abutment shall be temporarily hung with a spacer board and tack strip. After reaching a total of 1'-0" compacted lift, the tack strip shall be removed and Geotextile Reinforcement shall be pulled back slack free with its end anchored to soil underneath with staple or pins before the spacer board is pulled. Any alternate method to maintain the minimum gap between abutment concrete and Reinforced Soil may be proposed to the Engineer for approval.

NOTES:

1. Geotextile reinforcement shall be woven fabric with a Minimum Average Roll Value of 4800 lb/ft for installations with a gap and 2400 lb/ft for installations without a gap based on ASTM D4595.
2. Geotextile Reinforcement shall be placed by alternating Machine Direction (MD) with Cross Machine Direction (XD) from layer to layer.
3. The Geotextile Reinforcement wrap at Back Face of Abutment shall be pulled back slack free with its end anchored to soil underneath with staples or pins.
4. Minimum splice of all Geofabric shall consist of 6" of overlap.
5. Payment will be made under Item 206 Mechanical Reinforcement of Soil (cu.yd.) and Item 206 Structure Backfill (Class 1) (cu.yd.) and Shall include the cost for 6 inch ø Perforated Pipe underdrain and Subsurface Drain Outlet (6 inch ø NonPerforated Pipe).
6. Installation of Pipe Underdrain and Subsurface Drain Outlet will conform to the Construction requirements of section 605.03 and 605.06, respectively.

Design	INITIAL	DATE	Detail	INITIAL	DATE	Quantities	INITIAL	DATE
Designed By	JTF	12-12	Detailed By	DET	12-12	Quantities By	JTF	12-12
Checked By	PP	12-12	Checked By	PP	12-12	Checked By	WZ	12-12

22463 4:29:08 PM c:\projectwise\pwz_working\d0224606\18208BRDG_SH350_ExBkfill02.dgn

Print Date: 12/19/2012
File Name: 18208BRDG_SH350_ExBkfill02.dgn
Horiz. Scale: None Vert. Scale: None
Staff Bridge Branch - Unit 0226 DDG

ATKINS 4601 DTC Boulevard, Suite 700 Denver, CO 80237 Phone: (303) 221-7275 Fax: (303) 221-7276

Sheet Revisions		
Date:	Comments	Init.

Colorado Department of Transportation
DOT DEPARTMENT OF TRANSPORTATION
902 Erie Avenue
Pueblo, CO 81001
Phone: 719-546-5438 FAX: 719-546-5702
Region 2 JDH

As Constructed
No Revisions:
Revised:
Void:

SH 350 OVER PURGATOIRE RIVER MECHANICALLY STABILIZED BACKFILL

Designer: J. Fuller
Detailer: D. Tanner
Sheet Subset: Bridge
Structure Numbers: 0-19-R
Subset Sheets: B27 of 31

Project No./Code
FBR 3501-013
18208
Sheet Number 48

State of Colorado
Department of Transportation
Staff Bridge Design
Bridge Geometry Project Coordinate Converter
Version 1.00

Run date & time = Tue Dec 18 10:18:10 2012

Input Northing Offset = 244125.700000
Input Easting Offset = 63636.890000
Input Bearing = N 51 47 55.3900 E

DESCRIPTION

Units: feet;
Project: FBR 3501-013; Subaccount: 18208;
Designer: J. FULLER; Detailer: D. TANNER;
Location: REGION 2;
SH 350 OVER PURGATORIE RIVER
3-SPAN (82'-0", 91'-0", 82'-0"), 75°00'00" SKEW
PRECAST/PRESTRESSED CONCRETE BOX GIRDERS (CONTINUOUS)
257'-7" OUT-TO-OUT, 36'-0" CURB TO CURB
1'-6" BRIDGE RAIL (EACH SIDE)

HORIZONTAL ALIGNMENT DATA

HORIZONTAL TANGENT

VERTICAL ALIGNMENT DATA

ELEVATION AT PI	ELEVATION AT GRADE		STATION	ELEVATION AT GRADE	ELEVATION AT PI	PERCENT GRADE
						-2.303616
5622.2000	5622.2000	PI	112+28.4100			
						-2.303616
			116+96.3700	PI 5611.4200	5611.4200	
						-2.303616

TABLE OF ROADWAY CROSS-SLOPES (SUPERELEVATION: E= -NC-)

STATION	SLOPE LEFT	SLOPE RIGHT	VC LENGTH
(ON TANGENT)	-0.0200	-0.0200	75.00 (MAX)

OFFSET PROFILE CONTROL TO PIVOT POINT = 0.0000 FEET

LIMITS OF VALID ELEVATION AND CROSS-SLOPE DATA

BEGIN	END
111+00.0000	* UNLIMITED *

LAYOUT LINE DATA

LAYOUT LINE DEFINED TO BE COINCIDENT WITH HORIZONTAL CONTROL

	HCL STA	OFFSET	X	Y
LAYOUT LINE INTERSECTS REF LINE AT	113+00.0000	0.00000000	0.0000	0.0000

DEAD LOAD DEFLECTION DATA

DEFLECTIONS AT TENTH POINTS FROM FITTED CURVE

	0.0	0.1	0.2	0.3	0.4	0.5	0.6	0.7	0.8	0.9	1.0		
FOR BENT LINE: CL ABUT 1						07 CARD(S): 1		GIRDER LINES REFERENCED BY: (BLANK)					
													A4= 0.00000
INCH	0.0000	0.6024	1.1533	1.5874	1.8586	1.9412	1.8289	1.5354	1.0939	0.5578	0.0000	INCH	A3= 0.00000
FOOT	0.0000	0.0502	0.0961	0.1323	0.1549	0.1618	0.1524	0.1279	0.0912	0.0465	0.0000	FOOT	A2= 8.24540
													A1=-7.62660
SLOPE 0.501077											-0.449510	SLOPE	A0=-6.01292
FOR BENT LINE: AH BRG P2						07 CARD(S): 1		GIRDER LINES REFERENCED BY: (BLANK)					
													A4= 0.00000
INCH	0.0000	0.7631	1.4920	2.0852	2.4701	2.6032	2.4701	2.0852	1.4920	0.7631	0.0000	INCH	A3= 0.00000
FOOT	0.0000	0.0636	0.1243	0.1738	0.2058	0.2169	0.2058	0.1738	0.1243	0.0636	0.0000	FOOT	A2= 12.0856
													A1=-12.0856
SLOPE 0.615952											-0.615952	SLOPE	A0=-7.39143

	0.0	0.1	0.2	0.3	0.4	0.5	0.6	0.7	0.8	0.9	1.0

DEAD LOAD DEFLECTION DATA (CONT)

DEFLECTIONS AT TENTH POINTS FROM FITTED CURVE

	0.0	0.1	0.2	0.3	0.4	0.5	0.6	0.7	0.8	0.9	1.0		
FOR BENT LINE: AH BRG P3						07 CARD(S): 1		GIRDER LINES REFERENCED BY: (BLANK)					
													A4= 0.00000
INCH	0.0000	0.5578	1.0939	1.5354	1.8289	1.9412	1.8586	1.5874	1.1533	0.6024	0.0000	INCH	A3= 0.00000
FOOT	0.0000	0.0465	0.0912	0.1279	0.1524	0.1618	0.1549	0.1323	0.0961	0.0502	0.0000	FOOT	A2= 8.24540
													A1=-8.86420
SLOPE 0.449510											-0.501077	SLOPE	A0=-5.39412

	0.0	0.1	0.2	0.3	0.4	0.5	0.6	0.7	0.8	0.9	1.0

BENT LINE DESCRIPTION	INTERSECTION POINT STATION	OFFSET	ELEVATION		FROM LAYOUT LINE OFFSET X	ORDINATE Y	PROJECT COORDINATES NORTHING	EASTING	BENT LINE LENGTH FROM Y-AXIS	SKEW D M S	GIRDER LINE LENGTH FROM REF LINE	ROADWAY CROSS-SLOPE
* HORIZONTAL CONTROL LINE *			AT FINISHED GRADE									
REF LINE	113+00.0000	0.0000	5620.5508		0.0000	0.0000	244125.7000	63636.8900	0.0000	-15 00 00.00	0.0000	
BF ABUT 1	113+45.0000	0.0000	5619.5142	1	0.0000	45.0000	244153.5292	63672.2529	0.0000	-15 00 00.00	45.0000	
CL ABUT 1	113+46.2941	0.0000	5619.4844	10	0.0000	46.2941	244154.3295	63673.2699	0.0000	-15 00 00.00	46.2941	
BK BRG P2	114+27.2588	0.0000	5617.6193	1	0.0000	127.2588	244204.4001	63736.8954	0.0000	-15 00 00.00	127.2588	
CL PIER 2	114+28.2941	0.0000	5617.5954		0.0000	128.2941	244205.0404	63737.7090	0.0000	-15 00 00.00	128.2941	
AH BRG P2	114+29.3294	0.0000	5617.5716	10	0.0000	129.3294	244205.6807	63738.5226	0.0000	-15 00 00.00	129.3294	
BK BRG P3	115+18.2588	0.0000	5615.5230	1	0.0000	218.2588	244260.6769	63808.4072	0.0000	-15 00 00.00	218.2588	
CL PIER 3	115+19.2941	0.0000	5615.4991		0.0000	219.2941	244261.3172	63809.2207	0.0000	-15 00 00.00	219.2941	
AH BRG P3	115+20.3294	0.0000	5615.4753	10	0.0000	220.3294	244261.9574	63810.0343	0.0000	-15 00 00.00	220.3294	
CL ABUT 4	116+01.2941	0.0000	5613.6102	1	0.0000	301.2941	244312.0281	63873.6599	0.0000	-15 00 00.00	301.2941	
BF ABUT 4	116+02.5882	0.0000	5613.5804	0.0	0.0000	302.5882	244312.8284	63874.6768	0.0000	-15 00 00.00	302.5882	

LEFT EDGE OF DECK — PARALLEL TO HORIZONTAL CONTROL — 0.250000 FEET BELOW FINISHED GRADE

BENT LINE	STATION	OFFSET	ELEVATION	ELEV+DL	X	Y	NORTHING	EASTING	BENT LNTH	SKEW	GIRDER LNTH	CRS-SLP
REF LINE	112+94.7750	-19.5000	5620.0312		-19.5000	-5.2250	244137.7927	63620.7247	-20.1879	-15 00 00.00	0.0000	-0.020000
BF ABUT 1	113+39.7750	-19.5000	5618.9946		-19.5000	39.7750	244165.6218	63656.0876	-20.1879	-15 00 00.00	45.0000	-0.020000
CL ABUT 1	113+41.0691	-19.5000	5618.9648	618.9648	-19.5000	41.0691	244166.4221	63657.1046	-20.1879	-15 00 00.00	46.2941	-0.020000
F-1	113+49.1656	-19.5000	5618.7783	618.8285	-19.5000	49.1656	244171.4292	63663.4671			54.3906	-0.020000
F-2	113+57.2620	-19.5000	5618.5917	618.6879	-19.5000	57.2620	244176.4362	63669.8296			62.4870	-0.020000
F-3	113+65.3585	-19.5000	5618.4052	618.5375	-19.5000	65.3585	244181.4433	63676.1922			70.5835	-0.020000
F-4	113+73.4550	-19.5000	5618.2187	618.3736	-19.5000	73.4550	244186.4504	63682.5548			78.6800	-0.020000
F-5	113+81.5514	-19.5000	5618.0322	618.1940	-19.5000	81.5514	244191.4574	63688.9173			86.7764	-0.020000
F-6	113+89.6479	-19.5000	5617.8457	617.9981	-19.5000	89.6479	244196.4645	63695.2799			94.8729	-0.020000
F-7	113+97.7444	-19.5000	5617.6592	617.7871	-19.5000	97.7444	244201.4716	63701.6425			102.9694	-0.020000
F-8	114+05.8409	-19.5000	5617.4727	617.5638	-19.5000	105.8409	244206.4787	63708.0050			111.0659	-0.020000
F-9	114+13.9373	-19.5000	5617.2862	617.3326	-19.5000	113.9373	244211.4857	63714.3675			119.1623	-0.020000
BK BRG P2	114+22.0338	-19.5000	5617.0997	617.0997	-19.5000	122.0338	244216.4928	63720.7301	-20.1879	-15 00 00.00	127.2588	-0.020000
CL PIER 2	114+23.0691	-19.5000	5617.0758		-19.5000	123.0691	244217.1331	63721.5437	-20.1879	-15 00 00.00	128.2941	-0.020000
AH BRG P2	114+24.1044	-19.5000	5617.0520	617.0520	-19.5000	124.1044	244217.7733	63722.3573	-20.1879	-15 00 00.00	129.3294	-0.020000
F-1	114+32.9973	-19.5000	5616.8471	616.9107	-19.5000	132.9973	244223.2729	63729.3457			138.2223	-0.020000
F-2	114+41.8903	-19.5000	5616.6422	616.7666	-19.5000	141.8903	244228.7726	63736.3342			147.1153	-0.020000
F-3	114+50.7832	-19.5000	5616.4374	616.6111	-19.5000	150.7832	244234.2722	63743.3226			156.0082	-0.020000
F-4	114+59.6762	-19.5000	5616.2325	616.4384	-19.5000	159.6762	244239.7718	63750.3111			164.9012	-0.020000
F-5	114+68.5691	-19.5000	5616.0277	616.2446	-19.5000	168.5691	244245.2714	63757.2996			173.7941	-0.020000
F-6	114+77.4620	-19.5000	5615.8228	616.0286	-19.5000	177.4620	244250.7710	63764.2880			182.6870	-0.020000
F-7	114+86.3550	-19.5000	5615.6179	615.7917	-19.5000	186.3550	244256.2707	63771.2765			191.5800	-0.020000
F-8	114+95.2479	-19.5000	5615.4131	615.5374	-19.5000	195.2479	244261.7703	63778.2649			200.4729	-0.020000
F-9	115+04.1409	-19.5000	5615.2082	615.2718	-19.5000	204.1409	244267.2700	63785.2534			209.3659	-0.020000
BK BRG P3	115+13.0338	-19.5000	5615.0034	615.0034	-19.5000	213.0338	244272.7696	63792.2418	-20.1879	-15 00 00.00	218.2588	-0.020000
CL PIER 3	115+14.0691	-19.5000	5614.9795		-19.5000	214.0691	244273.4098	63793.0554	-20.1879	-15 00 00.00	219.2941	-0.020000
AH BRG P3	115+15.1044	-19.5000	5614.9557	614.9557	-19.5000	215.1044	244274.0501	63793.8690	-20.1879	-15 00 00.00	220.3294	-0.020000
F-1	115+23.2009	-19.5000	5614.7692	614.8156	-19.5000	223.2009	244279.0572	63800.2316			228.4259	-0.020000
F-2	115+31.2973	-19.5000	5614.5826	614.6738	-19.5000	231.2973	244284.0642	63806.5941			236.5223	-0.020000
F-3	115+39.3938	-19.5000	5614.3961	614.5241	-19.5000	239.3938	244289.0713	63812.9567			244.6188	-0.020000
F-4	115+47.4903	-19.5000	5614.2096	614.3620	-19.5000	247.4903	244294.0784	63819.3192			252.7153	-0.020000
F-5	115+55.5867	-19.5000	5614.0231	614.1849	-19.5000	255.5867	244299.0854	63825.6817			260.8118	-0.020000
F-6	115+63.6832	-19.5000	5613.8366	613.9915	-19.5000	263.6832	244304.0925	63832.0443			268.9082	-0.020000
F-7	115+71.7797	-19.5000	5613.6501	613.7824	-19.5000	271.7797	244309.0996	63838.4069			277.0047	-0.020000
F-8	115+79.8762	-19.5000	5613.4636	613.5597	-19.5000	279.8762	244314.1066	63844.7695			285.1012	-0.020000
F-9	115+87.9726	-19.5000	5613.2771	613.3273	-19.5000	287.9726	244319.1137	63851.1320			293.1976	-0.020000
CL ABUT 4	115+96.0691	-19.5000	5613.0905	613.0905	-19.5000	296.0691	244324.1208	63857.4945	-20.1879	-15 00 00.00	301.2941	-0.020000
BF ABUT 4	115+97.3632	-19.5000	5613.0607		-19.5000	297.3632	244324.9211	63858.5115	-20.1879	-15 00 00.00	302.5882	-0.020000

LEFT GUTTER LINE — PARALLEL TO HORIZONTAL CONTROL — 0.250000 FEET BELOW FINISHED GRADE

BENT LINE	STATION	OFFSET	ELEVATION	ELEV+DL	X	Y	NORTHING	EASTING	BENT LNTH	SKEW	GIRDER LNTH	CRS-SLP
REF LINE	112+95.1769	-18.0000	5620.0519		-18.0000	-4.8231	244136.8624	63621.9681	-18.6350	-15 00 00.00	0.0000	-0.020000
BF ABUT 1	113+40.1769	-18.0000	5619.0153		-18.0000	40.1769	244164.6916	63657.3311	-18.6350	-15 00 00.00	45.0000	-0.020000
CL ABUT 1	113+41.4710	-18.0000	5618.9855	618.9855	-18.0000	41.4710	244165.4919	63658.3480	-18.6350	-15 00 00.00	46.2941	-0.020000
F-1	113+49.5675	-18.0000	5618.7990	618.8492	-18.0000	49.5675	244170.4990	63664.7106			54.3906	-0.020000
F-2	113+57.6640	-18.0000	5618.6125	618.7086	-18.0000	57.6640	244175.5061	63671.0732			62.4870	-0.020000
F-3	113+65.7604	-18.0000	5618.4260	618.5583	-18.0000	65.7604	244180.5131	63677.4357			70.5835	-0.020000
F-4	113+73.8569	-18.0000	5618.2395	618.3943	-18.0000	73.8569	244185.5202	63683.7983			78.6800	-0.020000
F-5	113+81.9534	-18.0000	5618.0530	618.2147	-18.0000	81.9534	244190.5273	63690.1608			86.7764	-0.020000
F-6	113+90.0498	-18.0000	5617.8664	618.0189	-18.0000	90.0498	244195.5343	63696.5233			94.8729	-0.020000
F-7	113+98.1463	-18.0000	5617.6799	617.8079	-18.0000	98.1463	244200.5414	63702.8859			102.9694	-0.020000
F-8	114+06.2428	-18.0000	5617.4934	617.5846	-18.0000	106.2428	244205.5485	63709.2485			111.0659	-0.020000
F-9	114+14.3392	-18.0000	5617.3069	617.3534	-18.0000	114.3392	244210.5555	63715.6110			119.1623	-0.020000
BK BRG P2	114+22.4357	-18.0000	5617.1204	617.1204	-18.0000	122.4357	244215.5626	63721.9736	-18.6350	-15 00 00.00	127.2588	-0.020000
CL PIER 2	114+23.4710	-18.0000	5617.0965		-18.0000	123.4710	244216.2028	63722.7872	-18.6350	-15 00 00.00	128.2941	-0.020000
AH BRG P2	114+24.5063	-18.0000	5617.0727	617.0727	-18.0000	124.5063	244216.8431	63723.6007	-18.6350	-15 00 00.00	129.3294	-0.020000
F-1	114+33.3993	-18.0000	5616.8678	616.9314	-18.0000	133.3993	244222.3428	63730.5892			138.2223	-0.020000
F-2	114+42.2922	-18.0000	5616.6630	616.7873	-18.0000	142.2922	244227.8424	63737.5777			147.1153	-0.020000
F-3	114+51.1851	-18.0000	5616.4581	616.6319	-18.0000	151.1851	244233.3420	63744.5661			156.0082	-0.020000
F-4	114+60.0781	-18.0000	5616.2533	616.4591	-18.0000	160.0781	244238.8416	63751.5546			164.9012	-0.020000
F-5	114+68.9710	-18.0000	5616.0484	616.2653	-18.0000	168.9710	244244.3412	63758.5430			173.7941	-0.020000
F-6	114+77.8640	-18.0000	5615.8435	616.0494	-18.0000	177.8640	244249.8409	63765.5315			182.6870	-0.020000
F-7	114+86.7569	-18.0000	5615.6387	615.8124	-18.0000	186.7569	244255.3405	63772.5199			191.5800	-0.020000
F-8	114+95.6498	-18.0000	5615.4338	615.5582	-18.0000	195.6498	244260.8401	63779.5084			200.4729	-0.020000
F-9	115+04.5428	-18.0000	5615.2290	615.2926	-18.0000	204.5428	244266.3398	63786.4969			209.3659	-0.020000
BK BRG P3	115+13.4357	-18.0000	5615.0241	615.0241	-18.0000	213.4357	244271.8394	63793.4853	-18.6350	-15 00 00.00	218.2588	-0.020000
CL PIER 3	115+14.4710	-18.0000	5615.0003		-18.0000	214.4710	244272.4796	63794.2989	-18.6350	-15 00 00.00	219.2941	-0.020000
AH BRG P3	115+15.5063	-18.0000	5614.9764	614.9764	-18.0000	215.5063	244273.1199	63795.1125	-18.6350	-15 00 00.00	220.3294	-0.020000
F-1	115+23.6028	-18.0000	5614.7899	614.8364	-18.0000	223.6028	244278.1270	63801.4750			228.4259	-0.020000
F-2	115+31.6993	-18.0000	5614.6034	614.6945	-18.0000	231.6993	244283.1340	63807.8376			236.5223	-0.020000
F-3	115+39.7957	-18.0000	5614.4169	614.5448	-18.0000	239.7957	244288.1411	63814.2001			244.6188	-0.020000
F-4	115+47.8922	-18.0000	5614.2304	614.3828	-18.0000	247.8922	244293.1481	63820.5627			252.7153	-0.020000
F-5	115+55.9887	-18.0000	5614.0438	614.2056	-18.0000	255.9887	244298.1552	63826.9253			260.8118	-0.020000
F-6	115+64.0851	-18.0000	5613.8573	614.0122	-18.0000	264.0851	244303.1623	63833.2878			268.9082	-0.020000
F-7	115+72.1816	-18.0000	5613.6708	613.8031	-18.0000	272.1816	244308.1693	63839.6504			277.0047	-0.020000
F-8	115+80.2781	-18.0000	5613.4843	613.5804	-18.0000	280.2781	244313.1764	63846.0129			285.1012	-0.020000
F-9	115+88.3745	-18.0000	5613.2978	613.3480	-18.0000	288.3745	244318.1835	63852.3754			293.1976	-0.020000
CL ABUT 4	115+96.4710	-18.0000	5613.1113	613.1113	-18.0000	296.4710	244323.1905	63858.7380	-18.6350	-15 00 00.00	301.2941	-0.020000
BF ABUT 4	115+97.7651	-18.0000	5613.0815		-18.0000	297.7651	244323.9908	63859.7550	-18.6350	-15 00 00.00	302.5882	-0.020000

NOTES:

1. Elevations are at top of bridge deck, 3 inches below finished grade.
2. Positive roadway cross slope is upwards from the profile grade line.
3. These stations, coordinates, offsets and lengths define the layout of the structure in a two dimensional horizontal plane. Elevations define the final grade of the finished concrete deck. Fabrication of structural components through the direct use of this information is not intended or advisable.

Design	INITIAL	DATE	Detail	INITIAL	DATE	Quantities	INITIAL	DATE
Designed By	JTF	12-12	Detailed By	DET	12-12	Quantities By	JTF	12-12
Checked By	PP	12-12	Checked By	PP	12-12	Checked By	WZ	12-12

22463 4:29:20 PM c:\projectwise\pwz_working\d0224606\18208BRDG_SH350_BrDeckE101.dgn

Print Date: 12/19/2012
File Name: 18208BRDG_SH350_BrDeckE101.dgn
Horiz. Scale: 1:1 Vert. Scale: 1:1
Staff Bridge Branch - Unit 0226 DDG

ATKINS
4601 DTC Boulevard, Suite 700
Denver, CO 80237
Phone: (303) 221-7275 Fax: (303) 221-7276

Sheet Revisions		
Date:	Comments	Init.

Colorado Department of Transportation
DOT
902 Erie Avenue
Pueblo, CO 81001
Phone: 719-546-5438 FAX: 719-546-5702
Region JDH

As Constructed
No Revisions:
Revised:
Void:

SH 350 OVER PURGATOIRE RIVER
BRIDGE DECK ELEVATIONS
(SHEET 1 OF 4)

Designer: J. Fuller
Detailer: D. Tanner
Sheet Subset: Bridge
Structure Numbers: 0-19-R
Subset Sheets: B28 of 31

Project No./Code
FBR 3501-013
18208
Sheet Number 49

CL GIRDER A — PARALLEL TO HORIZONTAL CONTROL — 0.250000 FEET BELOW FINISHED GRADE

BENT LINE	STATION	OFFSET	ELEVATION	ELEV+DL	X	Y	NORTHING	EASTING	BENT LNTH	SKEW	GIRDER LNTH	CRS-SLP
REF LINE	112+95.8691	-15.4167	5620.0877		-15.4167	-4.1309	244135.2605	63624.1097	-15.9605	-15 00 00.00	0.0000	-0.020000
BF ABUT 1	113+40.8691	-15.4167	5619.0510		-15.4167	40.8691	244163.0896	63659.4726	-15.9605	-15 00 00.00	45.0000	-0.020000
CL ABUT 1	113+42.1632	-15.4167	5619.0212	619.0212	-15.4167	42.1632	244163.8899	63660.4896	-15.9605	-15 00 00.00	46.2941	-0.020000
F-1	113+50.2597	-15.4167	5618.8347	618.8849	-15.4167	50.2597	244168.8970	63666.8521			54.3906	-0.020000
F-2	113+58.3561	-15.4167	5618.6482	618.7443	-15.4167	58.3561	244173.9040	63673.2146			62.4870	-0.020000
F-3	113+66.4526	-15.4167	5618.4617	618.5940	-15.4167	66.4526	244178.9111	63679.5772			70.5835	-0.020000
F-4	113+74.5491	-15.4167	5618.2752	618.4301	-15.4167	74.5491	244183.9182	63685.9398			78.6800	-0.020000
F-5	113+82.6456	-15.4167	5618.0887	618.2504	-15.4167	82.6456	244188.9253	63692.3024			86.7764	-0.020000
F-6	113+90.7420	-15.4167	5617.9022	618.0546	-15.4167	90.7420	244193.9323	63698.6649			94.8729	-0.020000
F-7	113+98.8385	-15.4167	5617.7156	617.8436	-15.4167	98.8385	244198.9394	63705.0275			102.9694	-0.020000
F-8	114+06.9350	-15.4167	5617.5291	617.6203	-15.4167	106.9350	244203.9465	63711.3900			111.0659	-0.020000
F-9	114+15.0314	-15.4167	5617.3426	617.3891	-15.4167	115.0314	244208.9535	63717.7525			119.1623	-0.020000
BK BRG P2	114+23.1279	-15.4167	5617.1561	617.1561	-15.4167	123.1279	244213.9606	63724.1151	-15.9605	-15 00 00.00	127.2588	-0.020000
CL PIER 2	114+24.1632	-15.4167	5617.1323		-15.4167	124.1632	244214.6009	63724.9287	-15.9605	-15 00 00.00	128.2941	-0.020000
AH BRG P2	114+25.1985	-15.4167	5617.1084	617.1084	-15.4167	125.1985	244215.2411	63725.7423	-15.9605	-15 00 00.00	129.3294	-0.020000
F-1	114+34.0914	-15.4167	5616.9036	616.9671	-15.4167	134.0914	244220.7407	63732.7307			138.2223	-0.020000
F-2	114+42.9844	-15.4167	5616.6987	616.8230	-15.4167	142.9844	244226.2404	63739.7192			147.1153	-0.020000
F-3	114+51.8773	-15.4167	5616.4938	616.6676	-15.4167	151.8773	244231.7400	63746.7076			156.0082	-0.020000
F-4	114+60.7703	-15.4167	5616.2890	616.4948	-15.4167	160.7703	244237.2396	63753.6961			164.9012	-0.020000
F-5	114+69.6632	-15.4167	5616.0841	616.3011	-15.4167	169.6632	244242.7392	63760.6846			173.7941	-0.020000
F-6	114+78.5561	-15.4167	5615.8793	616.0851	-15.4167	178.5561	244248.2388	63767.6730			182.6870	-0.020000
F-7	114+87.4491	-15.4167	5615.6744	615.8482	-15.4167	187.4491	244253.7385	63774.6615			191.5800	-0.020000
F-8	114+96.3420	-15.4167	5615.4695	615.5939	-15.4167	196.3420	244259.2381	63781.6499			200.4729	-0.020000
F-9	115+05.2350	-15.4167	5615.2647	615.3283	-15.4167	205.2350	244264.7378	63788.6384			209.3659	-0.020000
BK BRG P3	115+14.1279	-15.4167	5615.0598	615.0598	-15.4167	214.1279	244270.2374	63795.6268	-15.9605	-15 00 00.00	218.2588	-0.020000
CL PIER 3	115+15.1632	-15.4167	5615.0360		-15.4167	215.1632	244270.8776	63796.4404	-15.9605	-15 00 00.00	219.2941	-0.020000
AH BRG P3	115+16.1985	-15.4167	5615.0121	615.0121	-15.4167	216.1985	244271.5179	63797.2540	-15.9605	-15 00 00.00	220.3294	-0.020000
F-1	115+24.2950	-15.4167	5614.8256	614.8721	-15.4167	224.2950	244276.5250	63803.6166			228.4259	-0.020000
F-2	115+32.3914	-15.4167	5614.6391	614.7303	-15.4167	232.3914	244281.5320	63809.9791			236.5223	-0.020000
F-3	115+40.4879	-15.4167	5614.4526	614.5805	-15.4167	240.4879	244286.5391	63816.3417			244.6188	-0.020000
F-4	115+48.5844	-15.4167	5614.2661	614.4185	-15.4167	248.5844	244291.5462	63822.7042			252.7153	-0.020000
F-5	115+56.6809	-15.4167	5614.0796	614.2413	-15.4167	256.6809	244296.5532	63829.0668			260.8118	-0.020000
F-6	115+64.7773	-15.4167	5613.8931	614.0479	-15.4167	264.7773	244301.5603	63835.4293			268.9082	-0.020000
F-7	115+72.8738	-15.4167	5613.7065	613.8388	-15.4167	272.8738	244306.5673	63841.7919			277.0047	-0.020000
F-8	115+80.9703	-15.4167	5613.5200	613.6161	-15.4167	280.9703	244311.5744	63848.1545			285.1012	-0.020000
F-9	115+89.0667	-15.4167	5613.3335	613.3837	-15.4167	289.0667	244316.5815	63854.5170			293.1976	-0.020000
CL ABUT 4	115+97.1632	-15.4167	5613.1470	613.1470	-15.4167	297.1632	244321.5885	63860.8796	-15.9605	-15 00 00.00	301.2941	-0.020000
BF ABUT 4	115+98.4573	-15.4167	5613.1172		-15.4167	298.4573	244322.3888	63861.8965	-15.9605	-15 00 00.00	302.5882	-0.020000

CL GIRDER B — PARALLEL TO HORIZONTAL CONTROL — 0.250000 FEET BELOW FINISHED GRADE

BENT LINE	STATION	OFFSET	ELEVATION	ELEV+DL	X	Y	NORTHING	EASTING	BENT LNTH	SKEW	GIRDER LNTH	CRS-SLP
REF LINE	112+97.5215	-9.2500	5620.1729		-9.2500	-2.4785	244131.4363	63629.2218	-9.5763	-15 00 00.00	0.0000	-0.020000
BF ABUT 1	113+42.5215	-9.2500	5619.1363		-9.2500	42.5215	244159.2654	63664.5848	-9.5763	-15 00 00.00	45.0000	-0.020000
CL ABUT 1	113+43.8156	-9.2500	5619.1065	619.1065	-9.2500	43.8156	244160.0658	63665.6017	-9.5763	-15 00 00.00	46.2941	-0.020000
F-1	113+51.9120	-9.2500	5618.9200	618.9702	-9.2500	51.9120	244165.0728	63671.9642			54.3906	-0.020000
F-2	113+60.0085	-9.2500	5618.7335	618.8296	-9.2500	60.0085	244170.0799	63678.3268			62.4870	-0.020000
F-3	113+68.1050	-9.2500	5618.3605	618.6792	-9.2500	68.1050	244175.0869	63684.6894			70.5835	-0.020000
F-4	113+76.2014	-9.2500	5618.3605	618.5153	-9.2500	76.2014	244180.0940	63691.0519			78.6800	-0.020000
F-5	113+84.2979	-9.2500	5618.1739	618.3357	-9.2500	84.2979	244185.1011	63697.4145			86.7764	-0.020000
F-6	113+92.3944	-9.2500	5617.9874	618.1398	-9.2500	92.3944	244190.1081	63703.7771			94.8729	-0.020000
F-7	114+00.4909	-9.2500	5617.8009	617.9289	-9.2500	100.4909	244195.1152	63710.1396			102.9694	-0.020000
F-8	114+08.5873	-9.2500	5617.6144	617.7056	-9.2500	108.5873	244200.1223	63716.5021			111.0659	-0.020000
F-9	114+16.6838	-9.2500	5617.4279	617.4744	-9.2500	116.6838	244205.1293	63722.8647			119.1623	-0.020000
BK BRG P2	114+24.7803	-9.2500	5617.2414	617.2414	-9.2500	124.7803	244210.1364	63729.2273	-9.5763	-15 00 00.00	127.2588	-0.020000
CL PIER 2	114+25.8156	-9.2500	5617.2175		-9.2500	125.8156	244210.7767	63730.0409	-9.5763	-15 00 00.00	128.2941	-0.020000
AH BRG P2	114+26.8509	-9.2500	5617.1937	617.1937	-9.2500	126.8509	244211.4169	63730.8545	-9.5763	-15 00 00.00	129.3294	-0.020000
F-1	114+35.7438	-9.2500	5616.9888	617.0524	-9.2500	135.7438	244216.9165	63737.8429			138.2223	-0.020000
F-2	114+44.6367	-9.2500	5616.7840	616.9083	-9.2500	144.6367	244222.4161	63744.8313			147.1153	-0.020000
F-3	114+53.5297	-9.2500	5616.5791	616.7529	-9.2500	153.5297	244227.9158	63751.8198			156.0082	-0.020000
F-4	114+62.4226	-9.2500	5616.3742	616.5801	-9.2500	162.4226	244233.4154	63758.8082			164.9012	-0.020000
F-5	114+71.3156	-9.2500	5616.1694	616.3863	-9.2500	171.3156	244238.9151	63765.7967			173.7941	-0.020000
F-6	114+80.2085	-9.2500	5615.9645	616.1704	-9.2500	180.2085	244244.4147	63772.7852			182.6870	-0.020000
F-7	114+89.1014	-9.2500	5615.7597	615.9334	-9.2500	189.1014	244249.9143	63779.7736			191.5800	-0.020000
F-8	114+97.9944	-9.2500	5615.5548	615.6791	-9.2500	197.9944	244255.4139	63786.7621			200.4729	-0.020000
F-9	115+06.8873	-9.2500	5615.3500	615.4135	-9.2500	206.8873	244260.9135	63793.7505			209.3659	-0.020000
BK BRG P3	115+15.7803	-9.2500	5615.1451	615.1451	-9.2500	215.7803	244266.4132	63800.7390	-9.5763	-15 00 00.00	218.2588	-0.020000
CL PIER 3	115+16.8156	-9.2500	5615.1212		-9.2500	216.8156	244267.0534	63801.5526	-9.5763	-15 00 00.00	219.2941	-0.020000
AH BRG P3	115+17.8509	-9.2500	5615.0974	615.0974	-9.2500	217.8509	244267.6937	63802.3662	-9.5763	-15 00 00.00	220.3294	-0.020000
F-1	115+25.9473	-9.2500	5614.9109	614.9574	-9.2500	225.9473	244272.7007	63808.7287			228.4259	-0.020000
F-2	115+34.0438	-9.2500	5614.7244	614.8155	-9.2500	234.0438	244277.7078	63815.0913			236.5223	-0.020000
F-3	115+42.1403	-9.2500	5614.5379	614.6658	-9.2500	242.1403	244282.7149	63821.4538			244.6188	-0.020000
F-4	115+50.2367	-9.2500	5614.3513	614.5038	-9.2500	250.2367	244287.7219	63827.8163			252.7153	-0.020000
F-5	115+58.3332	-9.2500	5614.1648	614.3266	-9.2500	258.3332	244292.7290	63834.1789			260.8118	-0.020000
F-6	115+66.4297	-9.2500	5613.9783	614.1332	-9.2500	266.4297	244297.7361	63840.5415			268.9082	-0.020000
F-7	115+74.5262	-9.2500	5613.7918	613.9241	-9.2500	274.5262	244302.7432	63846.9041			277.0047	-0.020000
F-8	115+82.6226	-9.2500	5613.6053	613.7014	-9.2500	282.6226	244307.7502	63853.2666			285.1012	-0.020000
F-9	115+90.7191	-9.2500	5613.4188	613.4690	-9.2500	290.7191	244312.7573	63859.6292			293.1976	-0.020000
CL ABUT 4	115+98.8156	-9.2500	5613.2323	613.2323	-9.2500	298.8156	244317.7644	63865.9917	-9.5763	-15 00 00.00	301.2941	-0.020000
BF ABUT 4	116+00.1097	-9.2500	5613.2025		-9.2500	300.1097	244318.5647	63867.0087	-9.5763	-15 00 00.00	302.5882	-0.020000

CL GIRDER C — PARALLEL TO HORIZONTAL CONTROL — 0.250000 FEET BELOW FINISHED GRADE

BENT LINE	STATION	OFFSET	ELEVATION	ELEV+DL	X	Y	NORTHING	EASTING	BENT LNTH	SKEW	GIRDER LNTH	CRS-SLP
REF LINE	112+99.1738	-3.0833	5620.2582		-3.0833	-0.8262	244127.6120	63634.3339	-3.1921	-15 00 00.00	0.0000	-0.020000
BF ABUT 1	113+44.1738	-3.0833	5619.2216		-3.0833	44.1738	244155.4412	63669.6969	-3.1921	-15 00 00.00	45.0000	-0.020000
CL ABUT 1	113+45.4679	-3.0833	5619.1918	619.1918	-3.0833	45.4679	244156.2415	63670.7138	-3.1921	-15 00 00.00	46.2941	-0.020000
F-1	113+53.5644	-3.0833	5619.0053	619.0555	-3.0833	53.5644	244161.2486	63677.0764			54.3906	-0.020000
F-2	113+61.6609	-3.0833	5618.8187	618.9149	-3.0833	61.6609	244166.2557	63683.4390			62.4870	-0.020000
F-3	113+69.7573	-3.0833	5618.6322	618.7645	-3.0833	69.7573	244171.2627	63689.8015			70.5835	-0.020000
F-4	113+77.8538	-3.0833	5618.4457	618.6006	-3.0833	77.8538	244176.2698	63696.1641			78.6800	-0.020000
F-5	113+85.9503	-3.0833	5618.2592	618.4210	-3.0833	85.9503	244181.2769	63702.5267			86.7764	-0.020000
F-6	113+94.0468	-3.0833	5618.0727	618.2251	-3.0833	94.0468	244186.2840	63708.8892			94.8729	-0.020000
F-7	114+02.1432	-3.0833	5617.8862	618.0141	-3.0833	102.1432	244191.2910	63715.2517			102.9694	-0.020000
F-8	114+10.2397	-3.0833	5617.6997	617.7908	-3.0833	110.2397	244196.2981	63721.6143			111.0659	-0.020000
F-9	114+18.3362	-3.0833	5617.5132	617.5597	-3.0833	118.3362	244201.3052	63727.9769			119.1623	-0.020000
BK BRG P2	114+26.4326	-3.0833	5617.3267	617.3267	-3.0833	126.4326	244206.3122	63734.3394	-3.1921	-15 00 00.00	127.2588	-0.020000
CL PIER 2	114+27.4679	-3.0833	5617.3028		-3.0833	127.4679	244206.9524	63735.1530	-3.1921	-15 00 00.00	128.2941	-0.020000
AH BRG P2	114+28.5032	-3.0833	5617.2790	617.2790	-3.0833	128.5032	244207.5927	63735.9666	-3.1921	-15 00 00.00	129.3294	-0.020000
F-1	114+37.3962	-3.0833	5617.0741	617.1377	-3.0833	137.3962	244213.0924	63742.9551			138.2223	-0.020000
F-2	114+46.2891	-3.0833	5616.8692	616.9936	-3.0833	146.2891	244218.5920	63749.9435			147.1153	-0.020000
F-3	114+55.1821	-3.0833	5616.6644	616.8381	-3.0833	155.1821	244224.0916	63756.9320			156.0082	-0.020000
F-4	114+64.0750	-3.0833	5616.4595	616.6654	-3.0833	164.0750	244229.5912	63763.9204			164.9012	-0.020000
F-5	114+72.9679	-3.0833	5616.2547	616.4716	-3.0833	172.9679	244235.0908	63770.9088			173.7941	-0.020000
F-6	114+81.8609	-3.0833	5616.0498	616.2556	-3.0833	181.8609	244240.5905	63777.8973			182.6870	-0.020000
F-7	114+90.7538	-3.0833	5615.8449	616.0187	-3.0833	190.7538	244246.0901	63784.8858			191.5800	-0.020000
F-8	114+99.6468	-3.0833	5615.6401	615.7644	-3.0833	199.6468	244251.5898	63791.8743			200.4729	-0.020000
F-9	115+08.5397	-3.0833	5615.4352	615.4988	-3.0833	208.5397	244257.0894	63798.8627			209.3659	-0.020000
BK BRG P3	115+17.4326	-3.0833	5615.2304	615.2304	-3.0833	217.4326	244262.5890	63805.8511	-3.1921	-15 00 00.00	218.2588	-0.020000
CL PIER 3	115+18.4679	-3.0833	5615.2065		-3.0833	218.4679	244263.2292	63806.6647	-3.1921	-15 00 00.00	219.2941	-0.020000
AH BRG P3	115+19.5032	-3.0833	5615.1827	615.1827	-3.0833	219.5032	244263.8695	63807.4783	-3.1921	-15 00 00.00	220.3294	-0.020000
F-1	115+27.5997	-3.0833	5614.9962	615.0426	-3.0833	227.5997	244268.8766	63813.8409			228.4259	-0.020000
F-2	115+35.6962	-3.0833	5614.8096	614.9008	-3.0833	235.6962	244273.8836	63820.2034			236.5223	-0.020000
F-3	115+43.7926	-3.0833	5614.6231	614.7511	-3.0833	243.7926	244278.8907	63826.5659			244.6188	-0.020000
F-4	115+51.8891	-3.0833	5614.4366	614.5890	-3.0833	251.8891	244283.8977	63832.9285			252.7153	-0.020000
F-5	115+59.9856	-3.0833	5614.2501	614.4119	-3.0833	259.9856	244288.9048	63839.2911			260.8117	-0.020000
F-6	115+68.0821	-3.0833	5614.0636	614.2185	-3.0833	268.0821	244293.9119	63845.6537			268.9082	-0.020000
F-7	115+76.1785	-3.0833	5613.8771	614.0094	-3.0833	276.1785	244298.9189	63852.0162			277.0047	-0.020000
F-8	115+84.2750	-3.0833	5613.6906	613.7867	-3.0833	284.2750	244303.9260	63858.3787			285.1012	-0.020000
F-9	115+92.3715	-3.0833	5613.5041	613.5543	-3.0833	292.3715	244308.9331	63864.7413			293.1976	-0.020000
CL ABUT 4	116+00.4679	-3.0833	5613.3175	613.3175	-3.0833	300.4679	244313.9401	63871.1038	-3.1921	-15 00 00.00	301.2941	-0.020000
BF ABUT 4	116+01.7620	-3.0833	5613.2877		-3.0833	301.7620	244314.7404	63872.1208	-3.1921	-15 00 00.00	302.5882	-0.020000

HCL — PARALLEL TO HORIZONTAL CONTROL — 0.250000 FEET BELOW FINISHED GRADE

BENT LINE	STATION	OFFSET	ELEVATION	ELEV+DL	X	Y	NORTHING	EASTING	BENT LNTH	SKEW	GIRDER LNTH	CRS-SLP
REF LINE	113+00.0000	0.0000	5620.3008		0.0000	0.0000	244125.7000	63636.8900	0.0000	-15 00 00.00	0.0000	
BF ABUT 1	113+45.0000	0.0000	5619.2642		0.0000	45.0000	244153.5292	63672.2529	0.0000	-15 00 00.00	45.0000	
CL ABUT 1	113+46.2941	0.0000	5619.2344	619.2344	0.0000	46.2941	244154.3295	63673.2699	0.0000	-15 00 00.00	46.2941	
F-1	113+54.3906	0.0000	5619.0479	619.0981	0.0000	54.3906	244159.3366	63679.6325			54.3906	
F-2	113+62.4870	0.0000	5618.8614	618.9575	0.0000	62.4870	244164.3436	63685.9950			62.4870	
F-3	113+70.5835	0.0000	5618.6749	618.8071	0.0000	70.5835	244169.3507	63692.3576			70.5835	
F-4	113+78.6800	0.0000	5618.4884	618.6432	0.0000	78.6800	244174.3578	63698.7201			78.6800	
F-5	113+86.7764	0.0000	5618.3018	618.4636	0.0000	86.7764	244179.3648	63705.0826			86.7764	
F-6	113+94.8729	0.0000	5618.1153	618.2677	0.0000	94.8729	244184.3719	63711.4452			94.8729	
F-7	114+02.9694	0.0000	5617.9288	618.0568	0.0000	102.9694	244189.3789	63717.8078			102.9694	
F-8	114+11.0659	0.0000	5617.7423	617.8335	0.0000	111.0659	244194.3860	63724.1704			111.0659	
F-9	114+19.1623	0.0000	5617.5558	617.6023	0.0000	119.1623	244199.3931	63730.5329			119.1623	
BK BRG P2	114+27.2588	0.0000	5617.3693	617.3693	0.0000	127.2588	244204.4001	63736.8954	0.0000	-15 00 00.00	127.2588	
CL PIER 2	114+28.2941	0.0000	5617.3454		0.0000	128.2941	244205.0404	63737.7090	0.0000	-15 00 00.00	128.2941	
AH BRG P2	114+29.3294	0.0000	5617.3216	617.3216	0.0000	129.3294	244205.6807	63738.5226	0.0000	-15 00 00.00	129.3294	
F-1	114+38.2223	0.0000	5617.1167	617.1803	0.0000	138.2223	244211.1803	63745.5110			138.2223	
F-2	114+47.1153	0.0000	5616.9119	617.0362	0.0000	147.1153	244216.6799	63752.4995			147.1153	
F-3	114+56.0082	0.0000	5616.7070	616.8808	0.0000	156.0082	244222.1795	63759.4880			156.0082	
F-4	114+64.9012	0.0000	5616.5022	616.7080	0.0000	164.9012	244227.6792	63766.4765			164.9012	
F-5	114+73.7941	0.0000	5616.2973	616.5142	0.0000	173.7941	244233.1788	63773.4649			173.7941	
F-6	114+82.6870	0.0000	5616.0924	616.2983	0.0000	182.6870	244238.6784	63780.4533			182.6870	
F-7	114+91.5800	0.0000	5615.8876	616.0613	0.0000	191.5800	244244.1780	63787.4418			191.5800	
F-8	115+00.4729	0.0000	5615.6827	615.8071	0.0000	200.4729	244249.6776	63794.4302			200.4729	
F-9	115+09.3659	0.0000	5615.4779	615.5415	0.0000	209.3659	244255.1773	63801.4187			209.3659	
BK BRG P3	115+18.2588	0.0000	5615.2730	615.2730	0.0000	218.2588	244260.6769	63808.4072	0.0000	-15 00 00.00	218.2588	
CL PIER 3	115+19.2941	0.0000	5615.2491		0.0000	219.2941	244261.3172	63809.2207	0.0000	-15 00 00.00	219.2941	
AH BRG P3	115+20.3294	0.0000	5615.2253	615.2253	0.0000	220.3294	244261.9574	63810.0343	0.0000	-15 00 00.00	220.3294	
F-1	115+28.4259	0.0000	5615.0388	615.0853	0.0000	228.4259	244266.9645	63816.3969			228.4259	
F-2	115+36.5223	0.0000	5614.8523	614.9434	0.0000	236.5223	244271.9715	63822.7594			236.5223	
F-3	115+44.6188	0.0000	5614.6658	614.7937	0.0000	244.6188	244276.9786	63829.1220			244.6188	
F-4	115+52.7153	0.0000	5614.4793	614.6317	0.0000	252.7153	244281.9857	63835.4846			252.7153	
F-5	115+60.8118	0.0000	5614.2927	614.4545	0.0000	260.8117	244286.9927	63841.8471			260.8117	
F-6	115+68.9082	0.0000	5614.1062	614.2611	0.0000	268.9082	244291.9998	63848.2096			268.9082	
F-7	115+77.0047	0.0000	5613.9197	614.0520	0.0000	277.0047	244297.0069	63854.5722			277.0047	
F-8	115+85.1012	0.0000	5613.7332	613.8293	0.0000	285.1012	244302.0140	63860.9348			285.1012	
F-9	115+93.1976	0.0000	5613.5467	613.5969	0.0000	293.1976	244307.0210	63867.2973			293.1976	
CL ABUT 4	116+01.2941	0.0000	5613.3602	613.3602	0.0000	301.2941	244312.0281	63873.6599	0.0000	-15 00 00.00	301.2941	
BF ABUT 4	116+02.5882	0.0000	5613.3304		0.0000	302.5882	244312.8284	63874.6768	0.0000	-15 00 00.00	302.5882	

NOTES:

1. Elevations are at top of bridge deck, 3 inches below finished grade.
2. Positive roadway cross slope is upwards from the profile grade line.
3. These stations, coordinates, offsets and lengths define the layout of the structure in a two dimensional horizontal plane. Elevations define the final grade of the finished concrete deck. Fabrication of structural components through the direct use of this information is not intended or advisable.

Design	INITIAL	DATE	Detail	INITIAL	DATE	Quantities	INITIAL	DATE
Designed By	JTF	12-12	Detailed By	DET	12-12	Quantities By	JTF	12-12
Checked By	PP	12-12	Checked By	PP	12-12	Checked By	WZ	12-12

Print Date: 12/19/2012
File Name: 18208BRDG_SH350_BrDeckEl02.dgn
Horiz. Scale: 1:1 Vert. Scale: 1:1
Staff Bridge Branch - Unit 0226 DDG

ATKINS
4601 DTC Boulevard, Suite 700
Denver, CO 80237
Phone: (303) 221-7275 Fax: (303) 221-7276

Sheet Revisions

Date:	Comments	Init.

Colorado Department of Transportation
902 Erie Avenue
Pueblo, CO 81001
Phone: 719-546-5438 FAX: 719-546-5702
Region JDH

As Constructed
No Revisions:
Revised:
Void:

SH 350 OVER PURGATOIRE RIVER
BRIDGE DECK ELEVATIONS
(SHEET 2 OF 4)

Designer: J. Fuller
Detailer: D. Tanner
Sheet Subset: Bridge
Structure Numbers: 0-19-R
Subset Sheets: B29 of 31

Project No./Code
FBR 3501-013
18208
Sheet Number 50

22463 4:29:29 PM c:\projectwise\pwz_working\d0224606\18208BRDG_SH350_BrDeckEl02.dgn

CL GIRDER D — PARALLEL TO HORIZONTAL CONTROL — 0.250000 FEET BELOW FINISHED GRADE

BENT LINE	STATION	OFFSET	ELEVATION	ELEV+DL	X	Y	NORTHING	EASTING	BENT LNTH	SKEW	GIRDER LNTH	CRS-SLP
REF LINE	113+00.8262	3.0833	5620.2201		3.0833	0.8262	244123.7880	63639.4461	3.1921	-15 00 00.00	0.0000	-0.020000
BF ABUT 1	113+45.8262	3.0833	5619.1835		3.0833	45.8262	244151.6171	63674.8090	3.1921	-15 00 00.00	45.0000	-0.020000
CL ABUT 1	113+47.1203	3.0833	5619.1537	619.1537	3.0833	47.1203	244152.4174	63675.8260	3.1921	-15 00 00.00	46.2941	-0.020000
P-1	113+55.2167	3.0833	5618.9672	619.0174	3.0833	55.2167	244157.4245	63682.1885			54.3906	-0.020000
P-2	113+63.3132	3.0833	5618.7807	618.8768	3.0833	63.3132	244162.4315	63688.5510			62.4870	-0.020000
P-3	113+71.4097	3.0833	5618.5942	618.7265	3.0833	71.4097	244167.4386	63694.9136			70.5835	-0.020000
P-4	113+79.5061	3.0833	5618.4077	618.5625	3.0833	79.5061	244172.4456	63701.2761			78.6800	-0.020000
P-5	113+87.6026	3.0833	5618.2211	618.3829	3.0833	87.6026	244177.4527	63707.6387			86.7764	-0.020000
P-6	113+95.6991	3.0833	5618.0346	618.1870	3.0833	95.6991	244182.4598	63714.0013			94.8729	-0.020000
P-7	114+03.7956	3.0833	5617.8481	617.9761	3.0833	103.7956	244187.4669	63720.3638			102.9694	-0.020000
P-8	114+11.8920	3.0833	5617.6616	617.7528	3.0833	111.8920	244192.4739	63726.7263			111.0659	-0.020000
P-9	114+19.9885	3.0833	5617.4751	617.5216	3.0833	119.9885	244197.4810	63733.0889			119.1623	-0.020000
BK BRG P2	114+28.0850	3.0833	5617.2886	617.2886	3.0833	128.0850	244202.4881	63739.4515	3.1921	-15 00 00.00	127.2588	-0.020000
CL PIER 2	114+29.1203	3.0833	5617.2647		3.0833	129.1203	244203.1284	63740.2651	3.1921	-15 00 00.00	128.2941	-0.020000
AH BRG P2	114+30.1556	3.0833	5617.2409	617.2409	3.0833	130.1556	244203.7686	63741.0787	3.1921	-15 00 00.00	129.3294	-0.020000
F-1	114+39.0485	3.0833	5617.0360	617.0996	3.0833	139.0485	244209.2682	63748.0671			138.2223	-0.020000
F-2	114+47.9414	3.0833	5616.8312	616.9555	3.0833	147.9414	244214.7678	63755.0555			147.1153	-0.020000
F-3	114+56.8344	3.0833	5616.6263	616.8001	3.0833	156.8344	244220.2675	63762.0440			156.0082	-0.020000
F-4	114+65.7273	3.0833	5616.4215	616.6273	3.0833	165.7273	244225.7671	63769.0324			164.9012	-0.020000
F-5	114+74.6203	3.0833	5616.2166	616.4335	3.0833	174.6203	244231.2667	63776.0209			173.7941	-0.020000
F-6	114+83.5132	3.0833	5616.0117	616.2176	3.0833	183.5132	244236.7663	63783.0094			182.6870	-0.020000
F-7	114+92.4061	3.0833	5615.8069	615.9806	3.0833	192.4061	244242.2659	63789.9978			191.5800	-0.020000
F-8	115+01.2991	3.0833	5615.6020	615.7264	3.0833	201.2991	244247.7656	63796.9863			200.4729	-0.020000
F-9	115+10.1920	3.0833	5615.3972	615.4608	3.0833	210.1920	244253.2652	63803.9747			209.3659	-0.020000
BK BRG P3	115+19.0850	3.0833	5615.1923	615.1923	3.0833	219.0850	244258.7649	63810.9632	3.1921	-15 00 00.00	218.2588	-0.020000
CL PIER 3	115+20.1203	3.0833	5615.1685		3.0833	220.1203	244259.4051	63811.7768	3.1921	-15 00 00.00	219.2941	-0.020000
AH BRG P3	115+21.1556	3.0833	5615.1446	615.1446	3.0833	221.1556	244260.0454	63812.5904	3.1921	-15 00 00.00	220.3294	-0.020000
F-1	115+29.2520	3.0833	5614.9581	615.0046	3.0833	229.2520	244265.7624	63819.9529			228.4259	-0.020000
F-2	115+37.3485	3.0833	5614.7716	614.8627	3.0833	237.3485	244270.0595	63825.3155			236.5223	-0.020000
F-3	115+45.4450	3.0833	5614.5851	614.7130	3.0833	245.4450	244275.0666	63831.6780			244.6188	-0.020000
F-4	115+53.5414	3.0833	5614.3986	614.5510	3.0833	253.5414	244280.0736	63838.0405			252.7153	-0.020000
F-5	115+61.6379	3.0833	5614.2120	614.3738	3.0833	261.6379	244285.0807	63844.4031			260.8118	-0.020000
F-6	115+69.7344	3.0833	5614.0255	614.1804	3.0833	269.7344	244290.0878	63850.7657			268.9082	-0.020000
F-7	115+77.8309	3.0833	5613.8390	613.9713	3.0833	277.8309	244295.0949	63857.1283			277.0047	-0.020000
F-8	115+85.9273	3.0833	5613.6525	613.7486	3.0833	285.9273	244300.1019	63863.4908			285.1012	-0.020000
F-9	115+94.0238	3.0833	5613.4660	613.5162	3.0833	294.0238	244305.1090	63869.8534			293.1976	-0.020000
CL ABUT 4	116+02.1203	3.0833	5613.2795	613.2795	3.0833	302.1203	244310.1160	63876.2159	3.1921	-15 00 00.00	301.2941	-0.020000
BF ABUT 4	116+03.4144	3.0833	5613.2497		3.0833	303.4144	244310.9164	63877.2329	3.1921	-15 00 00.00	302.5882	-0.020000

CL GIRDER E — PARALLEL TO HORIZONTAL CONTROL — 0.250000 FEET BELOW FINISHED GRADE

BENT LINE	STATION	OFFSET	ELEVATION	ELEV+DL	X	Y	NORTHING	EASTING	BENT LNTH	SKEW	GIRDER LNTH	CRS-SLP
REF LINE	113+02.4785	9.2500	5620.0587		9.2500	2.4785	244119.9637	63644.5582	9.5763	-15 00 00.00	0.0000	-0.020000
BF ABUT 1	113+47.4785	9.2500	5619.0221		9.2500	47.4785	244147.7929	63679.9211	9.5763	-15 00 00.00	45.0000	-0.020000
CL ABUT 1	113+48.7726	9.2500	5618.9923	618.9923	9.2500	48.7726	244148.5932	63680.9380	9.5763	-15 00 00.00	46.2941	-0.020000
P-1	113+56.8691	9.2500	5618.8058	618.8560	9.2500	56.8691	244153.6003	63687.3006			54.3906	-0.020000
P-2	113+64.9656	9.2500	5618.6193	618.7154	9.2500	64.9656	244158.6074	63693.6632			62.4870	-0.020000
P-3	113+73.0620	9.2500	5618.4328	618.5651	9.2500	73.0620	244163.6144	63700.0257			70.5835	-0.020000
P-4	113+81.1585	9.2500	5618.2463	618.4011	9.2500	81.1585	244168.6215	63706.3883			78.6800	-0.020000
P-5	113+89.2550	9.2500	5618.0597	618.2215	9.2500	89.2550	244173.6286	63712.7509			86.7764	-0.020000
P-6	113+97.3515	9.2500	5617.8732	618.0256	9.2500	97.3515	244178.6356	63719.1134			94.8729	-0.020000
P-7	114+05.4479	9.2500	5617.6867	617.8147	9.2500	105.4479	244183.6427	63725.4759			102.9694	-0.020000
P-8	114+13.5444	9.2500	5617.5002	617.5914	9.2500	113.5444	244188.6498	63731.8385			111.0659	-0.020000
P-9	114+21.6409	9.2500	5617.3137	617.3602	9.2500	121.6409	244193.6568	63738.2011			119.1623	-0.020000
BK BRG P2	114+29.7373	9.2500	5617.1272	617.1272	9.2500	129.7373	244198.6639	63744.5636	9.5763	-15 00 00.00	127.2588	-0.020000
CL PIER 2	114+30.7726	9.2500	5617.1033		9.2500	130.7726	244199.3041	63745.3772	9.5763	-15 00 00.00	128.2941	-0.020000
AH BRG P2	114+31.8079	9.2500	5617.0795	617.0795	9.2500	131.8079	244199.9444	63746.1908	9.5763	-15 00 00.00	129.3294	-0.020000
F-1	114+40.7009	9.2500	5616.8746	616.9382	9.2500	140.7009	244205.4440	63753.1793			138.2223	-0.020000
F-2	114+49.5938	9.2500	5616.6698	616.7941	9.2500	149.5938	244210.9436	63760.1677			147.1153	-0.020000
F-3	114+58.4868	9.2500	5616.4649	616.6387	9.2500	158.4868	244216.4433	63767.1562			156.0082	-0.020000
F-4	114+67.3797	9.2500	5616.2601	616.4659	9.2500	167.3797	244221.9429	63774.1446			164.9012	-0.020000
F-5	114+76.2726	9.2500	5616.0552	616.2721	9.2500	176.2726	244227.4425	63781.1330			173.7941	-0.020000
F-6	114+85.1656	9.2500	5615.8503	616.0562	9.2500	185.1656	244232.9422	63788.1215			182.6870	-0.020000
F-7	114+94.0585	9.2500	5615.6455	615.8192	9.2500	194.0585	244238.4418	63795.1100			191.5800	-0.020000
F-8	115+02.9515	9.2500	5615.4406	615.5650	9.2500	202.9515	244243.9414	63802.0985			200.4729	-0.020000
F-9	115+11.8444	9.2500	5615.2358	615.2994	9.2500	211.8444	244249.4410	63809.0869			209.3659	-0.020000
BK BRG P3	115+20.7373	9.2500	5615.0309	615.0309	9.2500	220.7373	244254.9406	63816.0753	9.5763	-15 00 00.00	218.2588	-0.020000
CL PIER 3	115+21.7726	9.2500	5615.0071		9.2500	221.7726	244255.5809	63816.8889	9.5763	-15 00 00.00	219.2941	-0.020000
AH BRG P3	115+22.8079	9.2500	5614.9832	614.9832	9.2500	222.8079	244256.2211	63817.7025	9.5763	-15 00 00.00	220.3294	-0.020000
F-1	115+30.9044	9.2500	5614.7967	614.8432	9.2500	230.9044	244261.2282	63824.0651			228.4259	-0.020000
F-2	115+39.0009	9.2500	5614.6102	614.7013	9.2500	239.0009	244266.2353	63830.4276			236.5223	-0.020000
F-3	115+47.0973	9.2500	5614.4237	614.5516	9.2500	247.0973	244271.2423	63836.7901			244.6188	-0.020000
F-4	115+55.1938	9.2500	5614.2372	614.3896	9.2500	255.1938	244276.2494	63843.1527			252.7153	-0.020000
F-5	115+63.2903	9.2500	5614.0506	614.2124	9.2500	263.2903	244281.2565	63849.5153			260.8117	-0.020000
F-6	115+71.3868	9.2500	5613.8641	614.0190	9.2500	271.3868	244286.2636	63855.8779			268.9082	-0.020000
F-7	115+79.4832	9.2500	5613.6776	613.8099	9.2500	279.4832	244291.2706	63862.2404			277.0047	-0.020000
F-8	115+87.5797	9.2500	5613.4911	613.5872	9.2500	287.5797	244296.2777	63868.6030			285.1012	-0.020000
F-9	115+95.6762	9.2500	5613.3046	613.3548	9.2500	295.6762	244301.2848	63874.9655			293.1976	-0.020000
CL ABUT 4	116+03.7726	9.2500	5613.1181	613.1181	9.2500	303.7726	244306.2918	63881.3280	9.5763	-15 00 00.00	301.2941	-0.020000
BF ABUT 4	116+05.0667	9.2500	5613.0883		9.2500	305.0667	244307.0921	63882.3450	9.5763	-15 00 00.00	302.5882	-0.020000

CL GIRDER F — PARALLEL TO HORIZONTAL CONTROL — 0.250000 FEET BELOW FINISHED GRADE

BENT LINE	STATION	OFFSET	ELEVATION	ELEV+DL	X	Y	NORTHING	EASTING	BENT LNTH	SKEW	GIRDER LNTH	CRS-SLP
REF LINE	113+04.1309	15.4167	5619.8973		15.4167	4.1309	244116.1395	63649.6703	15.9605	-15 00 00.00	0.0000	-0.020000
BF ABUT 1	113+49.1309	15.4167	5618.8607		15.4167	49.1309	244143.9687	63685.0333	15.9605	-15 00 00.00	45.0000	-0.020000
CL ABUT 1	113+50.4250	15.4167	5618.8309	618.8309	15.4167	50.4250	244144.7690	63686.0502	15.9605	-15 00 00.00	46.2941	-0.020000
F-1	113+58.5215	15.4167	5618.6444	618.6946	15.4167	58.5215	244149.7761	63692.4128			54.3906	-0.020000
F-2	113+66.6179	15.4167	5618.4579	618.5540	15.4167	66.6179	244154.7831	63698.7753			62.4870	-0.020000
F-3	113+74.7144	15.4167	5618.2714	618.4037	15.4167	74.7144	244159.7902	63705.1379			70.5835	-0.020000
F-4	113+82.8109	15.4167	5618.0849	618.2397	15.4167	82.8109	244164.7973	63711.5005			78.6800	-0.020000
F-5	113+90.9073	15.4167	5617.8984	618.0601	15.4167	90.9073	244169.8043	63717.8630			86.7764	-0.020000
F-6	113+99.0038	15.4167	5617.7118	617.8643	15.4167	99.0038	244174.8114	63724.2255			94.8729	-0.020000
F-7	114+07.1003	15.4167	5617.5253	617.6533	15.4167	107.1003	244179.8185	63730.5881			102.9694	-0.020000
F-8	114+15.1968	15.4167	5617.3388	617.4300	15.4167	115.1968	244184.8256	63736.9507			111.0659	-0.020000
F-9	114+23.2932	15.4167	5617.1523	617.1989	15.4167	123.2932	244189.8326	63743.3132			119.1623	-0.020000
BK BRG P2	114+31.3897	15.4167	5616.9658	616.9658	15.4167	131.3897	244194.8397	63749.6758	15.9605	-15 00 00.00	127.2588	-0.020000
CL PIER 2	114+32.4250	15.4167	5616.9419		15.4167	132.4250	244195.4800	63750.4894	15.9605	-15 00 00.00	128.2941	-0.020000
AH BRG P2	114+33.4603	15.4167	5616.9181	616.9181	15.4167	133.4603	244196.1202	63751.3029	15.9605	-15 00 00.00	129.3294	-0.020000
F-1	114+42.3532	15.4167	5616.7132	616.7768	15.4167	142.3532	244201.6198	63758.2914			138.2223	-0.020000
F-2	114+51.2462	15.4167	5616.5084	616.6327	15.4167	151.2462	244207.1195	63765.2799			147.1153	-0.020000
F-3	114+60.1391	15.4167	5616.3035	616.4773	15.4167	160.1391	244212.6191	63772.2683			156.0082	-0.020000
F-4	114+69.0321	15.4167	5616.0987	616.3045	15.4167	169.0321	244218.1187	63779.2568			164.9012	-0.020000
F-5	114+77.9250	15.4167	5615.8938	616.1107	15.4167	177.9250	244223.6183	63786.2452			173.7941	-0.020000
F-6	114+86.8179	15.4167	5615.6889	615.8948	15.4167	186.8179	244229.1179	63793.2336			182.6870	-0.020000
F-7	114+95.7109	15.4167	5615.4841	615.6578	15.4167	195.7109	244234.6176	63800.2221			191.5800	-0.020000
F-8	115+04.6038	15.4167	5615.2792	615.4036	15.4167	204.6038	244240.1172	63807.2106			200.4729	-0.020000
F-9	115+13.4968	15.4167	5615.0744	615.1380	15.4167	213.4968	244245.6169	63814.1991			209.3659	-0.020000
BK BRG P3	115+22.3897	15.4167	5614.8695	614.8695	15.4167	222.3897	244251.1165	63821.1875	15.9605	-15 00 00.00	218.2588	-0.020000
CL PIER 3	115+23.4250	15.4167	5614.8457		15.4167	223.4250	244251.7567	63822.0011	15.9605	-15 00 00.00	219.2941	-0.020000
AH BRG P3	115+24.4603	15.4167	5614.8218	614.8218	15.4167	224.4603	244252.3970	63822.8147	15.9605	-15 00 00.00	220.3294	-0.020000
F-1	115+32.5568	15.4167	5614.6353	614.6818	15.4167	232.5568	244257.4041	63829.1772			228.4259	-0.020000
F-2	115+40.6532	15.4167	5614.4488	614.5399	15.4167	240.6532	244262.4111	63835.5397			236.5223	-0.020000
F-3	115+48.7497	15.4167	5614.2623	614.3902	15.4167	248.7497	244267.4182	63841.9023			244.6188	-0.020000
F-4	115+56.8462	15.4167	5614.0758	614.2282	15.4167	256.8462	244272.4253	63848.2649			252.7153	-0.020000
F-5	115+64.9426	15.4167	5613.8892	614.0510	15.4167	264.9426	244277.4323	63854.6274			260.8117	-0.020000
F-6	115+73.0391	15.4167	5613.7027	613.8576	15.4167	273.0391	244282.4394	63860.9900			268.9082	-0.020000
F-7	115+81.1356	15.4167	5613.5162	613.6485	15.4167	281.1356	244287.4464	63867.3526			277.0047	-0.020000
F-8	115+89.2321	15.4167	5613.3297	613.4258	15.4167	289.2321	244292.4535	63873.7151			285.1012	-0.020000
F-9	115+97.3285	15.4167	5613.1432	613.1934	15.4167	297.3285	244297.4606	63880.0776			293.1976	-0.020000
CL ABUT 4	116+05.4250	15.4167	5612.9567	612.9567	15.4167	305.4250	244302.4676	63886.4402	15.9605	-15 00 00.00	301.2941	-0.020000
BF ABUT 4	116+06.7191	15.4167	5612.9269		15.4167	306.7191	244303.2679	63887.4572	15.9605	-15 00 00.00	302.5882	-0.020000

RIGHT GUTTER LINE — PARALLEL TO HORIZONTAL CONTROL — 0.250000 FEET BELOW FINISHED GRADE

BENT LINE	STATION	OFFSET	ELEVATION	ELEV+DL	X	Y	NORTHING	EASTING	BENT LNTH	SKEW	GIRDER LNTH	CRS-SLP
REF LINE	113+04.8231	18.0000	5619.8297		18.0000	4.8231	244114.5376	63651.8119	18.6350	-15 00 00.00	0.0000	-0.020000
BF ABUT 1	113+49.8231	18.0000	5618.7931		18.0000	49.8231	244142.3667	63687.1748	18.6350	-15 00 00.00	45.0000	-0.020000
CL ABUT 1	113+51.1172	18.0000	5618.7633	618.7633	18.0000	51.1172	244143.1670	63688.1918	18.6350	-15 00 00.00	46.2941	-0.020000
F-1	113+59.2137	18.0000	5618.5768	618.6270	18.0000	59.2137	244148.1741	63694.5543			54.3906	-0.020000
F-2	113+67.3101	18.0000	5618.3903	618.4864	18.0000	67.3101	244153.1811	63700.9168			62.4870	-0.020000
F-3	113+75.4066	18.0000	5618.2038	618.3360	18.0000	75.4066	244158.1882	63707.2794			70.5835	-0.020000
F-4	113+83.5031	18.0000	5618.0173	618.1721	18.0000	83.5031	244163.1953	63713.6420			78.6800	-0.020000
F-5	113+91.5995	18.0000	5617.8307	617.9925	18.0000	91.5995	244168.2023	63720.0045			86.7764	-0.020000
F-6	113+99.6960	18.0000	5617.6442	617.7966	18.0000	99.6960	244173.2094	63726.3671			94.8729	-0.020000
F-7	114+07.7925	18.0000	5617.4577	617.5857	18.0000	107.7925	244178.2165	63732.7297			102.9694	-0.020000
F-8	114+15.8889	18.0000	5617.2712	617.3624	18.0000	115.8889	244183.2235	63739.0922			111.0659	-0.020000
F-9	114+23.9854	18.0000	5617.0847	617.1312	18.0000	123.9854	244188.2306	63745.4547			119.1623	-0.020000
BK BRG P2	114+32.0819	18.0000	5616.8982	616.8982	18.0000	132.0819	244193.2377	63751.8173	18.6350	-15 00 00.00	127.2588	-0.020000
CL PIER 2	114+33.1172	18.0000	5616.8743		18.0000	133.1172	244193.8780	63752.6309	18.6350	-15 00 00.00	128.2941	-0.020000
AH BRG P2	114+34.1525	18.0000	5616.8505	616.8505	18.0000	134.1525	244194.5182	63753.4445	18.6350	-15 00 00.00	129.3294	-0.020000
F-1	114+43.0454	18.0000	5616.6456	616.7092	18.0000	143.0454	244200.0178	63760.4329			138.2223	-0.020000
F-2	114+51.9384	18.0000	5616.4408	616.5651	18.0000	151.9384	244205.5175	63767.4214			147.1153	-0.020000
F-3	114+60.8313	18.0000	5616.2359	616.4097	18.0000	160.8313	244211.0171	63774.4098			156.0082	-0.020000
F-4	114+69.7242	18.0000	5616.0310	616.2369	18.0000	169.7242	244216.5167	63781.3983			164.9012	-0.020000
F-5	114+78.6172	18.0000	5615.8262	616.0431	18.0000	178.6172	244222.0163	63788.3868			173.7941	-0.020000
F-6	114+87.5101	18.0000	5615.6213	615.8272	18.0000	187.5101	244227.5159	63795.3752			182.6870	-0.020000
F-7	114+96.4031	18.0000	5615.4165	615.5902	18.0000	196.4031	244233.0156	63802.3637			191.5800	-0.020000
F-8	115+05.2960	18.0000	5615.2116	615.3359	18.0000	205.2960	244238.5152	63809.3521			200.4729	-0.020000
F-9	115+14.1889	18.0000	5615.0068	615.0703	18.0000	214.1889	244244.0148	63816.3405			209.3659	-0.020000
BK BRG P3	115+23.0819	18.0000	5614.8019	614.8019	18.0000	223.0819	244249.5145	63823.3290	18.6350	-15 00 00.00	218.2588	-0.020000
CL PIER 3	115+24.1172	18.0000	5614.7780		18.0000	224.1172	244250.1547	63824.1426	18.6350	-15 00 00.00	219.2941	-0.020000
AH BRG P3	115+25.1525	18.0000	5614.7542	614.7542	18.0000	225.1525	244250.7950	63824.9562	18.6350	-15 00 00.00	220.3294	-0.020000
F-1	115+33.2490	18.0000	5614.5677	614.6142	18.0000	233.2490	244255.8021	63831.3188			228.4259	-0.020000
F-2	115+41.3454	18.0000	5614.3812	614.4723	18.0000	241.3454	244260.8091	63837.6813			236.5223	-0.020000
F-3	115+49.4419	18.0000	5614.1947	614.3226	18.0000	249.4419	244265.8162	63844.0439			244.6188	-0.020000
F-4	115+57.5384	18.0000	5614.0081	614.1606	18.0000	257.5384	244270.8233	63850.4064			252.7153	-0.020000
F-5	115+65.6348	18.0000	5613.8216	613.9834	18.0000	265.6348	244275.8303	63856.7689			260.8117	-0.020000
F-6	115+73.7313	18.0000	5613.6351	613.7900	18.0000	273.7313	244280.8374	63863.1315			268.9082	-0.020000
F-7	115+81.8278	18.0000	5613.4486	613.5809	18.0000	281.8278	244285.8445	63869.4941			277.0047	-0.020000
F-8	115+89.9242	18.0000	5613.2621	613.3582	18.0000	289.9242	244290.8515	63875.8566			285.1012	-0.020000
F-9	115+98.0207	18.0000	5613.0756	613.1258	18.0000	298.0207	244295.8586	63882.2192			293.1976	-0.020000
CL ABUT 4	116+06.1172	18.0000	5612.8891	612.8891	18.0000	306.1172	244300.8656	63888.5817	18.6350	-15 00 00.00	301.2941	-0.020000
BF ABUT 4	116+07.4113	18.0000	5612.8593		18.0000	307.4113	244301.6660	63889.5987	18.6350	-15 00 00.00	302.5882	-0.020000

NOTES:

1. Elevations are at top of bridge deck, 3 inches below finished grade.
2. Positive roadway cross slope is upwards from the profile grade line.
3. These stations, coordinates, offsets and lengths define the layout of the structure in a two dimensional horizontal plane. Elevations define the final grade of the finished concrete deck. Fabrication of structural components through the direct use of this information is not intended or advisable.

Design	INITIAL	DATE	Detail	INITIAL	DATE	Quantities	INITIAL	DATE
Designed By	JTF	12-12	Detailed By	DET	12-12	Quantities By	JTF	12-12
Checked By	PP	12-12	Checked By	PP	12-12	Checked By	WZ	12-12

Print Date: 12/19/2012
File Name: 18208BRDG_SH350_BrDeckEl03.dgn
Horiz. Scale: 1:1 Vert. Scale: 1:1
Staff Bridge Branch - Unit 0226 DDG

ATKINS
4601 DTC Boulevard, Suite 700
Denver, CO 80237
Phone: (303) 221-7275 Fax: (303) 221-7276

Sheet Revisions

Date:	Comments	Init.

Colorado Department of Transportation
902 Erie Avenue
Pueblo, CO 81001
Phone: 719-546-5438 FAX: 719-546-5702
Region JDH

As Constructed
No Revisions:
Revised:
Void:

SH 350 OVER PURGATOIRE RIVER
BRIDGE DECK ELEVATIONS
(SHEET 3 OF 4)

Designer: J. Fuller
Detailer: D. Tanner
Sheet Subset: Bridge
Structure Numbers: 0-19-R
Subset Sheets: B30 of 31

Project No./Code
FBR 3501-013
18208
Sheet Number 51

	RIGHT EDGE OF DECK		PARALLEL TO HORIZONTAL CONTROL						0.250000 FEET BELOW FINISHED GRADE			
BENT LINE	STATION	OFFSET	ELEVATION	ELEV+DL	X	Y	NORTHING	EASTING	BENT LNTH	SKEW	GIRDER LNTH	CRS-SLP
REF LINE	113+05.2250	19.5000	5619.7905		19.5000	5.2250	244113.6073	63653.0553	20.1879	-15 00 00.00	0.0000	-0.020000
BF ABUT 1	113+50.2250	19.5000	5618.7539		19.5000	50.2250	244141.4365	63688.4183	20.1879	-15 00 00.00	45.0000	-0.020000
CL ABUT 1	113+51.5191	19.5000	5618.7240	618.7240	19.5000	51.5191	244142.2368	63689.4352	20.1879	-15 00 00.00	46.2941	-0.020000
F-1	113+59.6156	19.5000	5618.5375	618.5877	19.5000	59.6156	244147.2439	63695.7978			54.3906	-0.020000
F-2	113+67.7120	19.5000	5618.3510	618.4471	19.5000	67.7120	244152.2509	63702.1603			62.4870	-0.020000
F-3	113+75.8085	19.5000	5618.1645	618.2968	19.5000	75.8085	244157.2580	63708.5229			70.5835	-0.020000
F-4	113+83.9050	19.5000	5617.9780	618.1329	19.5000	83.9050	244162.2651	63714.8855			78.6800	-0.020000
F-5	113+92.0015	19.5000	5617.7915	617.9532	19.5000	92.0015	244167.2722	63721.2480			86.7764	-0.020000
F-6	114+00.0979	19.5000	5617.6050	617.7574	19.5000	100.0979	244172.2792	63727.6105			94.8729	-0.020000
F-7	114+08.1944	19.5000	5617.4185	617.5464	19.5000	108.1944	244177.2863	63733.9731			102.9694	-0.020000
F-8	114+16.2909	19.5000	5617.2319	617.3231	19.5000	116.2909	244182.2934	63740.3357			111.0659	-0.020000
F-9	114+24.3873	19.5000	5617.0454	617.0919	19.5000	124.3873	244187.3004	63746.6982			119.1623	-0.020000
BK BRG P2	114+32.4838	19.5000	5616.8589	616.8589	19.5000	132.4838	244192.3075	63753.0608	20.1879	-15 00 00.00	127.2588	-0.020000
CL PIER 2	114+33.5191	19.5000	5616.8351		19.5000	133.5191	244192.9477	63753.8744	20.1879	-15 00 00.00	128.2941	-0.020000
AH BRG P2	114+34.5544	19.5000	5616.8112	616.8112	19.5000	134.5544	244193.5880	63754.6879	20.1879	-15 00 00.00	129.3294	-0.020000
F-1	114+43.4473	19.5000	5616.6064	616.6700	19.5000	143.4473	244199.0876	63761.6764			138.2223	-0.020000
F-2	114+52.3403	19.5000	5616.4015	616.5258	19.5000	152.3403	244204.5873	63768.6649			147.1153	-0.020000
F-3	114+61.2332	19.5000	5616.1966	616.3704	19.5000	161.2332	244210.0869	63775.6533			156.0082	-0.020000
F-4	114+70.1262	19.5000	5615.9918	616.1976	19.5000	170.1262	244215.5865	63782.6418			164.9012	-0.020000
F-5	114+79.0191	19.5000	5615.7869	616.0039	19.5000	179.0191	244221.0861	63789.6302			173.7941	-0.020000
F-6	114+87.9120	19.5000	5615.5821	615.7879	19.5000	187.9120	244226.5857	63796.6186			182.6870	-0.020000
F-7	114+96.8050	19.5000	5615.3772	615.5510	19.5000	196.8050	244232.0854	63803.6072			191.5800	-0.020000
F-8	115+05.6979	19.5000	5615.1724	615.2967	19.5000	205.6979	244237.5850	63810.5956			200.4729	-0.020000
F-9	115+14.5909	19.5000	5614.9675	615.0311	19.5000	214.5909	244243.0846	63817.5841			209.3659	-0.020000
BK BRG P3	115+23.4838	19.5000	5614.7626	614.7626	19.5000	223.4838	244248.5842	63824.5725	20.1879	-15 00 00.00	218.2588	-0.020000
CL PIER 3	115+24.5191	19.5000	5614.7388		19.5000	224.5191	244249.2245	63825.3861	20.1879	-15 00 00.00	219.2941	-0.020000
AH BRG P3	115+25.5544	19.5000	5614.7149	614.7149	19.5000	225.5544	244249.8648	63826.1997	20.1879	-15 00 00.00	220.3294	-0.020000
F-1	115+33.6509	19.5000	5614.5284	614.5749	19.5000	233.6509	244254.8718	63832.5622			228.4259	-0.020000
F-2	115+41.7473	19.5000	5614.3419	614.4331	19.5000	241.7473	244259.8789	63838.9247			236.5223	-0.020000
F-3	115+49.8438	19.5000	5614.1554	614.2833	19.5000	249.8438	244264.8860	63845.2873			244.6188	-0.020000
F-4	115+57.9403	19.5000	5613.9689	614.1213	19.5000	257.9403	244269.8930	63851.6499			252.7153	-0.020000
F-5	115+66.0368	19.5000	5613.7824	613.9441	19.5000	266.0368	244274.9001	63858.0125			260.8117	-0.020000
F-6	115+74.1332	19.5000	5613.5959	613.7508	19.5000	274.1332	244279.9071	63864.3750			268.9082	-0.020000
F-7	115+82.2297	19.5000	5613.4094	613.5416	19.5000	282.2297	244284.9142	63870.7376			277.0047	-0.020000
F-8	115+90.3262	19.5000	5613.2228	613.3190	19.5000	290.3262	244289.9213	63877.1001			285.1012	-0.020000
F-9	115+98.4226	19.5000	5613.0363	613.0865	19.5000	298.4226	244294.9283	63883.4626			293.1976	-0.020000
CL ABUT 4	116+06.5191	19.5000	5612.8498	612.8498	19.5000	306.5191	244299.9354	63889.8252	20.1879	-15 00 00.00	301.2941	-0.020000
BF ABUT 4	116+07.8132	19.5000	5612.8200		19.5000	307.8132	244300.7357	63890.8422	20.1879	-15 00 00.00	302.5882	-0.020000

NOTES:

1. Elevations are at top of bridge deck, 3 inches below finished grade.
2. Positive roadway cross slope is upwards from the profile grade line.
3. These stations, coordinates, offsets and lengths define the layout of the structure in a two dimensional horizontal plane. Elevations define the final grade of the finished concrete deck. Fabrication of structural components through the direct use of this information is not intended or advisable.

Design	INITIAL	DATE	Detail	INITIAL	DATE	Quantities	INITIAL	DATE
Designed By	JTF	12-12	Detailed By	DET	12-12	Quantities By	JTF	12-12
Checked By	PP	12-12	Checked By	PP	12-12	Checked By	WZ	12-12

22463 4:29:48 PM c:\projectwise\pw2_working\d0224606\18208BRDG_SH350_BrDeckEl04.dgn

Print Date: 12/19/2012
File Name: 18208BRDG_SH350_BrDeckEl04.dgn
Horiz. Scale: 1:1 Vert. Scale: 1:1
Staff Bridge Branch - Unit 0226 DDG

ATKINS
4601 DTC Boulevard, Suite 700
Denver, CO 80237
Phone: (303) 221-7275 Fax: (303) 221-7276

Sheet Revisions		
Date:	Comments	Init.

Colorado Department of Transportation
DOT
DEPARTMENT OF TRANSPORTATION
902 Erie Avenue
Pueblo, CO 81001
Phone: 719-546-5438 FAX: 719-546-5702
Region JDH

As Constructed
No Revisions:
Revised:
Void:

SH 350 OVER PURGATOIRE RIVER
BRIDGE DECK ELEVATIONS
(SHEET 4 OF 4)

Designer: J. Fuller
Detailer: D. Tanner
Sheet Subset: Bridge
Structure Numbers: 0-19-R
Subset Sheets: B31 of 31

Project No./Code
FBR 3501-013
18208
Sheet Number 52

Profile, detail and section not to scale

AERIAL WATERLINE TYPICAL PROFILE

Notes:
1. It is estimated that 1.8 CY of Concrete Class D (Bridge) will be required for the additional concrete anchor. The concrete, reinforcing steel and earthwork required for the addtional anchor will not be paid for separately, but shall be included in the cost of the Removal of Bridge.
2. Contractor shall not undermine existing concrete anchor or disturb supporting soil.

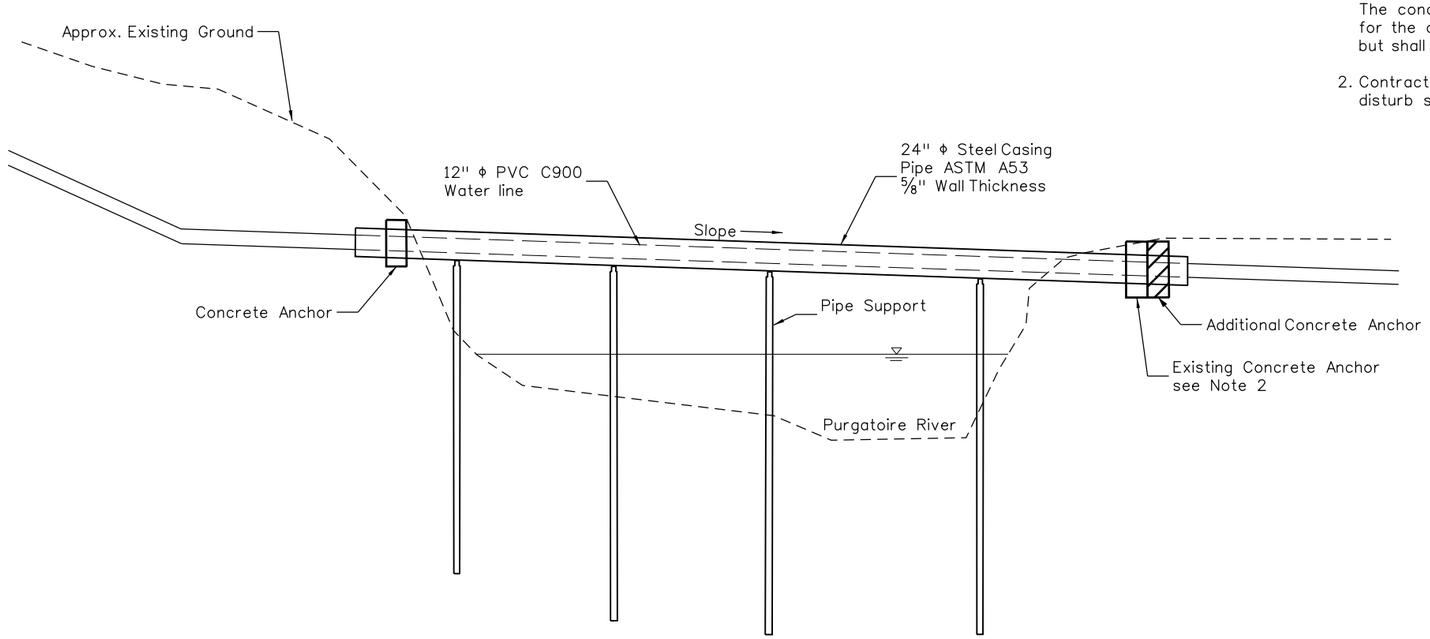

CONCRETE ANCHOR DETAIL

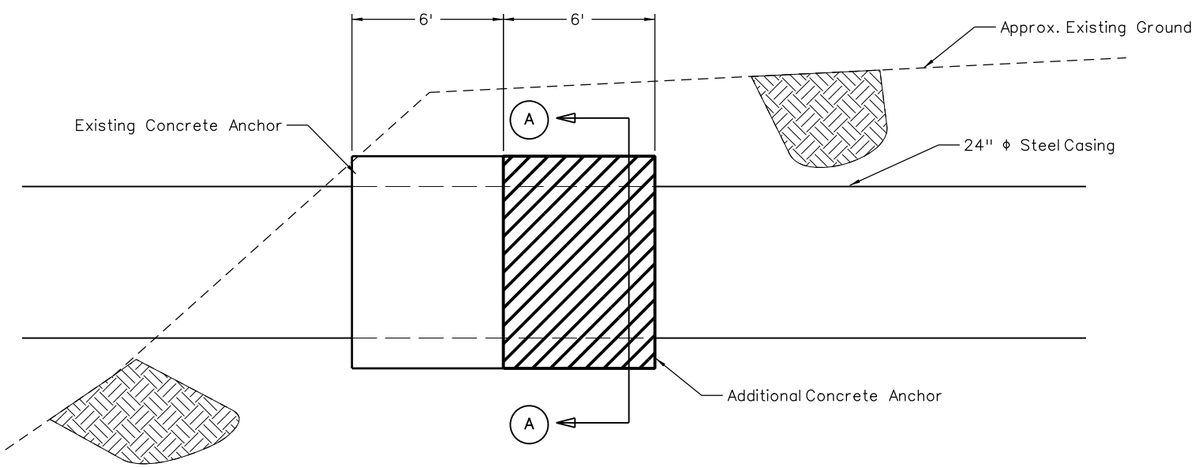

CONCRETE ANCHOR SECTION (A)

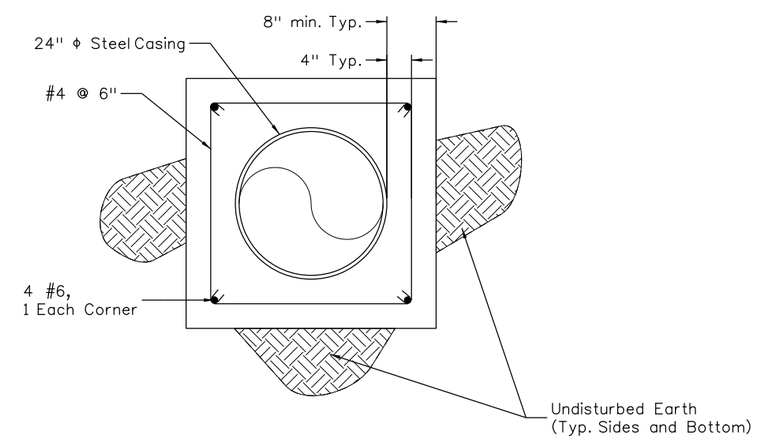

Print Date: 2/8/2013	Sheet Revisions	Colorado Department of Transportation	As Constructed	AERIAL WATERLINE DETAILS	Project No./Code
File Name: 18208DES_waterline.dgn	Date: / Comments / Init.	902 Erie Avenue, Pueblo, CO 81001, Phone: 719-546-5439 FAX: 719-546-5702	No Revisions:		FBR 3501-013
Horiz. Scale: 1:1 Vert. Scale: As Noted		Region 2 JDH	Revised:	Designer: jlb / Structure Numbers: 0-19-R	18208
Unit Information Unit Leader Initials			Void:	Detailer: jlb	
				Sheet Subset: Water / Subset Sheets: 1 of 1	Sheet Number 53

billingsj 11:00:11 AM c:\projectwise\pw2_working\d0224696\18208DES_waterline.dgn

1. SITE DESCRIPTION
For Information Only to fulfill the CDPS-SCP (Colorado Discharge Permit System - Stormwater Construction Permit) Update to reflect current project site conditions.

A. PROJECT SITE DESCRIPTION: SH 350 bridge replacement (Str. O-19-H) at MP 6.637 over the Purgatoire River- includes removal of bridge, construction of new bridge structure and roadway transitions, guardrail, bridge rail, HMA pavement, erosion control and an on-site detour.

B. PROPOSED SEQUENCING FOR MAJOR ACTIVITIES: Erosion control measures, construction of on-site detour, removal of bridge, construction of new bridge structure, embankment, ABC, HMA, striping and signing.

C. ACRES OF DISTURBANCE:
1. Total area of construction site: 3.7 acres
2. Total area of disturbance: 2.9 acres
3. Acreage of seeding: 2.0 acres

D. EXISTING SOIL DATA: The existing soil is comprised mainly of fine loamy sand to loamy sand with a slight to moderate erosivity.

E. EXISTING VEGETATION, INCLUDING PERCENT COVER: 76 Percent Cover

F. POTENTIAL POLLUTANTS SOURCES: See First Construction Activities under Potential Pollutant Sources. The ECS shall prepare a list of all potential pollutants and their locations in accordance with subsection 107.25.

G. RECEIVING WATER:
1. Outfall locations: Purgatoire River
2. Names of receiving water(s) on site and the ultimate receiving water: Purgatoire River
3. Distance ultimate receiving water is from project: immediate

H. ALLOWABLE NON-STORMWATER DISCHARGES:
1. Groundwater and stormwater dewatering: Discharges to the ground of water from construction dewatering activities may be authorized provided that:
a. the source is groundwater and/or groundwater combined with stormwater that does not contain pollutants
b. the source and BMPs are identified in the SWMP
c. discharges do not leave the site as surface runoff or to surface waters.
2. If discharges do not meet the above criteria a separate permit from the Department of Health will be required. Contaminated groundwater requiring coverage under a separate permit may include groundwater contaminated with pollutants from a landfill, mining activities, industrial pollutant plumes, underground storage tank, etc.

I. ENVIRONMENTAL IMPACTS:
1. Wetland Impacts: YES
2. Stream Impacts: YES
3. Threatened and Endangered Species: NONE

2. SITE MAP COMPONENTS:
Pre-construction

A. PROJECT CONSTRUCTION POTENTIAL SITE BOUNDARIES

B. ALL AREAS OF GROUND SURFACE DISTURBANCE

C. AREAS OF CUT AND FILL

D. LOCATION OF ALL STRUCTURAL BMPs IDENTIFIED IN THE SWMP

E. LOCATION OF NON-STRUCTURAL BMPs AS APPLICABLE IN THE SWMP

F. SPRINGS, STREAMS, WETLANDS AND OTHER SURFACE WATER

G. PROTECTION OF TREES, SHRUBS, CULTURAL RESOURCES AND MATURE VEGETATION]

H. AREAS USED FOR STORING AND STOCKPILING OF MATERIALS, STAGING AREAS (field trailer,fueling,etc) and BATCH PLANTS

Revise site maps in accordance to 208.03

3. SWMP ADMINSTRATOR FOR DESIGN: Jennifer Billings – Project Manager & Rob Frei – Environmental Specialist

4. STORMWATER MANAGEMENT CONTROLS FIRST CONSTRUCTION ACTIVITIES
THE CONTRACTOR SHALL PERFORM THE FOLLOWING:

A. DESIGNATE A SWMP ADMINISTRATOR/EROSION CONTROL SUPERVISOR (To be filled out at time of construction; designate the individual(s) responsible for implementing, maintaining and revising the SWMP, including the title and contact information. The activities and responsibilities of the administrator shall address all aspects of the projects SWMP.)

Name/Title: Contact information:

B. POTENTIAL POLLUTANT SOURCES
Evaluate, identify and describe all potential sources of pollutants at the site in accordance with subsection 107.25 and place in the SWMP notebook. All BMPs related to potential pollutants shall be shown on the SWMP site map by the contractor's ECS.

C. BEST MANAGEMENT PRACTICES (BMPs) FOR STORMWATER POLLUTION PREVENTION

PHASED BMP IMPLEMENTATION, APPLICATION AND NARRATIVE:
During Design: "BMP as Designed" boxes are marked when used in the SWMP. During construction: the ECS shall update the narratives, include new narratives and update the "In use on site" boxes to match which BMPs are currently in use on site. Clearly describe the relationship between the phases of construction and the implementation of BMP controls.

STRUCTURAL and NONSTRUCTURAL BMPs that may be potentially used on the project for erosion and sediment control; practices may include, but are not linited to:

Structural BMPs and Application	Narrative	BMP as Designed	In use on site	FIRST CONSTRUCTION ACTIVITIES	DURING CONSTRUCTION	INTERIM/FINAL STABILIZATION
Earth Berm/Stockpile	Placed around toe to contain sediment around stockpile				X	
Earth Berm/Toe of fill	Placed prior to earthwork within specified distance of toe to capture sediment and protect undisturbed areas					
Earth berm/ Diversion	Placed to divert drainage and subdivide runoff volume from less than 10 acre sub basins. Temp feature to be removed upon final stabilization					
*Rock Check Dams/Ditch	Velocity checks in ditches placed immediately after ditch grading					
Silt Fence/Sediment Control	Placed on contour to contain construction runoff					
Silt Fence/Protection of Vegetation	Placed to protect undisturbed area and delineate boundary of protected area	X		X	X	
Erosion Logs, Silt Berms or Silt Dikes/Ditch Checks	Erosion Control checks in ditches placed immediately after ditch grading to reduce flow velocity of runoff in ditch	X		X	X	
Erosion Logs/ Existing Inlet	Placed prior to disturbance at existing inlets where disturbance maybe occurring to cause sediment laden water to enter pipe					
Erosion Logs/culvert inlet or outlet	Placed on culvert to filter or prevent sediment from entering pipe. If disturbance occurs above pipe then erosion logs are placed above pipe				X	
Erosion Logs/Sediment Control	Placed to protect undisturbed area and delineate boundary of protected area					
Storm Drain Inlet Protection/Sediment Control	Placed to protect storm drain inlets to filter or prevent sediment from entering drainage system.					
Temporary Sediment Trap/Basin	Contain and filter sediment laden water from < 5 acre sub basins within construction disturbance					
Permanent	Utilized during construction					

Structural BMPs and Application	Narrative	BMP as Designed	In use on site	FIRST CONSTRUCTION ACTIVITIES	DURING CONSTRUCTION	INTERIM/FINAL STABILIZATION
Sediment Trap/Basin	to act as temporary sediment containment. Outlet structure shall be modified for construction runoff					
Embankment Protection or Temp Slope Drain	Placed as a conduit or chute to drain runoff down slope and prevent erosion of slope					
Outlet Protection	Material placed as energy dissipation device to prevent erosion at outlet structure					X
Concrete Washouts/ Construction Control	Construction waste management of concrete washout material				X	
Vehicle tracking Pad/ Construction Control	Placed to prevent tracking of sediment from disturbance to offsite surface			X	X	
Sweeping/ Construction or Source Control	Utilized to remove sediment on pavement surface and to prevent sediment from entering drainage system				X	
Dewatering/ Construction Control	Sediment control to remove or filter sediment from construction dewatering				X	
Temporary Stream Crossing/ Construction Control	Constructed over stream or drainage to prevent discharge of pollutants from construction equipment into stream.					
Clean water diversion	Placed to divert clean surface or ground water from mixing with construction runoff or activity				X	
Other						

Print Date: 1/31/2013	Sheet Revisions	Colorado Department of Transportation	As Constructed	STORMWATER MANAGEMENT PLAN
File Name: 18208_SWMP_Plan.dgn	Date: / Comments / Init.	902 Erie Avenue, Pueblo, CO 81001, Phone: 719-546-5439 FAX: 719-546-5702	No Revisions:	Designer: jlb; Detailer: jlb; Structure Numbers: 0-19-R
Horiz. Scale: 1:1 Vert. Scale: As Noted	R-X	Region 2 JDH	Revised:	Sheet Subset: SWMP; Subset Sheets: 2 of 8
Unit Information Unit Leader Initials			Void:	

Project No./Code
FBR 3501-013
18208
Sheet Number 55

billingsj 10:34:48 AM c:\projectwise\pwz_working\d0224696\18208_SWMP_Plan.dgn

Non Structural BMPs and Application	Narrative	BMP As Designed	In Use On Site	FIRST CONSTRUCTION ACTIVITIES	DURING CONSTRUCTION	INTERIM/FINAL STABILIZATION
Surface Roughening/ Grading Techniques	Interim and temp stabilization of disturbance and to minimize wind and erosion				X	X
Seeding Permanent/Final Stabilization	Reduce runoff and control erosion on disturbed areas	X				X
Seeding Temporary	Over wintering of disturbance or used to control erosion for areas scheduled for future construction					
Mulch/Mulch Tackifier/ Temp or Final Stabilization	Placed as a surface cover for erosion control and or seeding establishment	X			X	X
Soil Retention Blanket/Temp or Final Stabilization	Placed as surface cover for erosion control and seeding establishment	X				X
Turf Reinforcement Mat/ Final Stabilization	Placed in channels or on slopes for erosion control, channel liner and seeding establishment					
Soil Binder/Temp Stabilization	Placed as surface treatment to provide temp erosion control	X			X	
Spray on Mulch Blanket/ Temp or Final Stabilization	Placed cover on slopes to control erosion and seeding establishment					
Vegetative Buffer Strips	Filter sediment laden runoff from disturbance area					
Protection Of Trees/Protected Resources -Fence Plastic	Placed prior to construction to protect existing vegetation to remain	X		X		
Preservation Of Mature Vegetation/Work Access and Grading Plans	Used to protect existing stable cover and minimize impact to vegetation					
*Check dams may be rock, erosion logs, silt dike, silt berm, etc. as indicated in the narratives and SWMP site map.						
Erosion control devices are used to limit the amount of soil loss on site.						
Sediment control devices are designed to capture sediment on the project site.						
Construction control are BMPs related to construction access and staging.						
BMP locations are indicated on the SWMP site map.						
BMP details and narratives not covered by the SWMP or Standard Plan M-208-1 shall be added to the SWMP notebook by the ECS.						

D. OFFSITE DRAINAGE (RUN ON WATER)
1. Describe and record BMPs on the SWMP site map that has been implemented to address off site run-on water in accordance with subsection 208.03.

E. VEHICLE TRACKING PAD
1. BMPs shall be implemented in accordance with subsection 208.04.

F. PERIMETER CONTROL
1. Perimeter control shall be established as the first item on the SWMP to prevent the potential for pollutants leaving the construction site boundaries, entering the stormwater drainage system, or discharging to state waters.
2. Perimeter control may consist of vegetation buffers, berms, silt fence, erosion logs, existing landforms, or other BMPs as approved.
3. Perimeter control shall be in accordance with subsection 208.04.

5. DURING CONSTRUCTION

RESPONSIBILITIES OF THE SWMP ADMINISTRATOR/EROSION CONTROL SUPERVISOR DURING CONSTRUCTION

The SWMP should be considered a "living document" that is continuously reviewed and modified. During construction, the following items shall be added, updated, or amended as needed by the SWMP Administrator/Erosion Control Supervisor (ECS) in accordance with Section 208.

During construction, indicate how items that have not been addressed during design are being handled in construction. If items are covered in the template or other sections of the SWMP notebook indicate below what section the discussion takes place.

A. STOCKPILE MANAGEMENT - shall be done in accordance with subsection 107.25 and 208.07

B. CONCRETE WASHOUT - Concrete wash out water or waste from field laboratories and paving equipment shall be contained in accordance with subsection 208.05.

C. SAW CUTTING - shall be done in accordance with subsection 107.25, 208.04, 208.05

D. STREET CLEANING - shall be done in accordance with subsection 208.04

6. INSPECTIONS

A. Inspections shall be in accordance with subsection 208.03 (c).

7. BMP MAINTENANCE

A. Maintenance shall be in accordance with subsection 208.04 (f).

8. RECORD KEEPING

A. Records shall be kept in accordance with subsection 208.03 (c).

9. INTERIM AND FINAL STABILIZATON

A. SEEDING PLAN

Soil preparation, soil conditioning or topsoil, seeding (native), mulching (weed free) and/or mulch tackifier will be required for an estimated 2.0 acres of disturbed area within the right-of-way limits which are not surfaced. The following types and rates shall be used:

COMMON NAME	BOTANICAL NAME	LBS. PLS./ACRE
Blue grama	Bouteloua gracilis v. Hachita	2
Western wheatgrass	Pascopyrum smithii v. arriba	6
Sideoats grama	Bouteloua curtipendula v. Vaughn	3
Little bluestem	Schizachyrium scoparium 'Pastura'	3
Green needlegrass	Stipa viridula v. Lordom	3
Buffalo grass	Bouteloua dactyloides 'Plains'	4
Junegrass	Koeleria macrantha	0.2
Prairie coneflower	Ratibida columnifera	0.3
Purple Prairie Clover	Ratibida columnaris	0.5
Gaillardia	Gaillardia aristata	1
Oats	Avena sativa	3
TOTAL		**26**

B. SEEDING APPLICATION: Drill seed 0.25 inch to 0.5 inch into the soil. In small areas not accessible to a drill, hand broadcast at double the rate and rake 0.25 inch to 0.5 inch into the soil.

C. MULCHING APPLICATION: Apply a minimum of 1 ½ tons of certified weed free native hay per acre and in accordance with Section 213, and mechanically crimp it into the soil in combination with an organic mulch tackifier.

D. SPECIAL REQUIREMENTS: Due to high failure rates, hydromulching and/or hydroseeding will not be allowed

E. Soil conditioning and fertilizer requirements:

Soil conditioner paid for as Item 212- Soil Conditioning (Acre)		
Biological nutrient organic based fertilizer (lbs/acre)*	Humate (lbs/acre)	Compost (cys/acre) (1/2 inch depth)
600	200	65

*Biological nutrient shall not exceed 8-8-8 (N-P-K). Humate based material shall be in accordance to Section 212 and compost shall be in accordance to Special Provision 212. Refer to Project Special- Topsoil for additional topsoil amendments. Placing compost when required to amend embankment and as soil conditioner may be combined as a single application.

F. BLANKET APPLICATION: On slopes and ditches requiring a blanket, the blanket shall be placed in lieu of mulch and mulch tackifier. See SWMP for blanket locations.

G. RESEEDING OPERATIONS/CORRECTIVE STABILIZATION

Prior to final acceptance.

1. Seeded areas shall be reviewed during the 14 day inspections by the Erosion Control Supervisor for bare soils caused by surface or wind erosion. Bare areas caused by surface or gully erosion, blown away mulch, etc. shall be regraded, seeded, mulched and have mulch tackifier (or blanket) applied as necessary, at no additional cost to the project.
2. Areas where seed has not germinated after one season shall be evaluated by the Engineer and CDOT Landscape Architect. Areas that have not germinated shall have seed, mulch and mulch tackifier (or blanket) reapplied. Work shall be paid for by the appropriate bid item.
3. The Contractor shall maintain seeding/mulch/tackifier, mow to control weeds or apply herbicide to control weeds in the seeded areas until Final Acceptance.

10. PRIOR TO FINAL ACCEPTANCE

A. Final Acceptance shall be in accordance with subsection 208.10.

11. TABULATION OF STORMWATER QUANTITIES

PAY ITEM	DESCRIPTION	UNIT	QUANTITY
207	TOPSOIL	(CY)	333
208	EROSION LOG (12 INCH)	(LF)	300
208	EROSION BALES (WEED FREE)	(EA)	25
208	SILT FENCE	(LF)	2,250
208	GRAVEL BAG	(LF)	50
208	CONCRETE WASHOUT STRUCTURE	(EA)	1
208	VEHICLE TRACKING PAD	(EA)	4
208	REMOVAL AND DISPOSAL OF SEDIMENT (LABOR)	(HR)	20
208	REMOVAL AND DISPOSAL OF SEDIMENT (EQUIPMENT)	(HR)	20
208	SWEEPING (SEDIMENT REMOVAL)	(HR)	120
208	REMOVAL OF TRASH	(HR)	120
208	EROSION CONTROL SUPERVISOR	(DAY)	120
212	SEEDING (NATIVE)	(AC)	2
212	SOIL CONDITIONING	(AC)	2
213	MULCHING (WEED FREE HAY)	(AC)	2
216	SOIL RETENTION BLANKET (STRAW/COCONUT)(BIODEGRADABLE CLASS 1)	(SY)	1525
700	F/A EROSION CONTROL	(FA)	1

*It is anticipated that additional BMPs and BMP quantities not shown on the SWMP Site Maps shall be required on the project for unforeseen conditions and replacement of items that are beyond their useful service life, see subsection 208.03 and 208.04 (e). Quantities for all BMPs shown above are estimated, and have been increased for unforeseen Project conditions.

A. BMP sediment removal and disposal shall be paid for as: 208 Removal and Disposal of Sediment (Equipment) and 208 Removal and Disposal of Sediment (Labor). All other BMP maintenance shall be included in the cost of the BMP Device.

Maintenance of seeded areas shall be paid for as: included in the price of the work

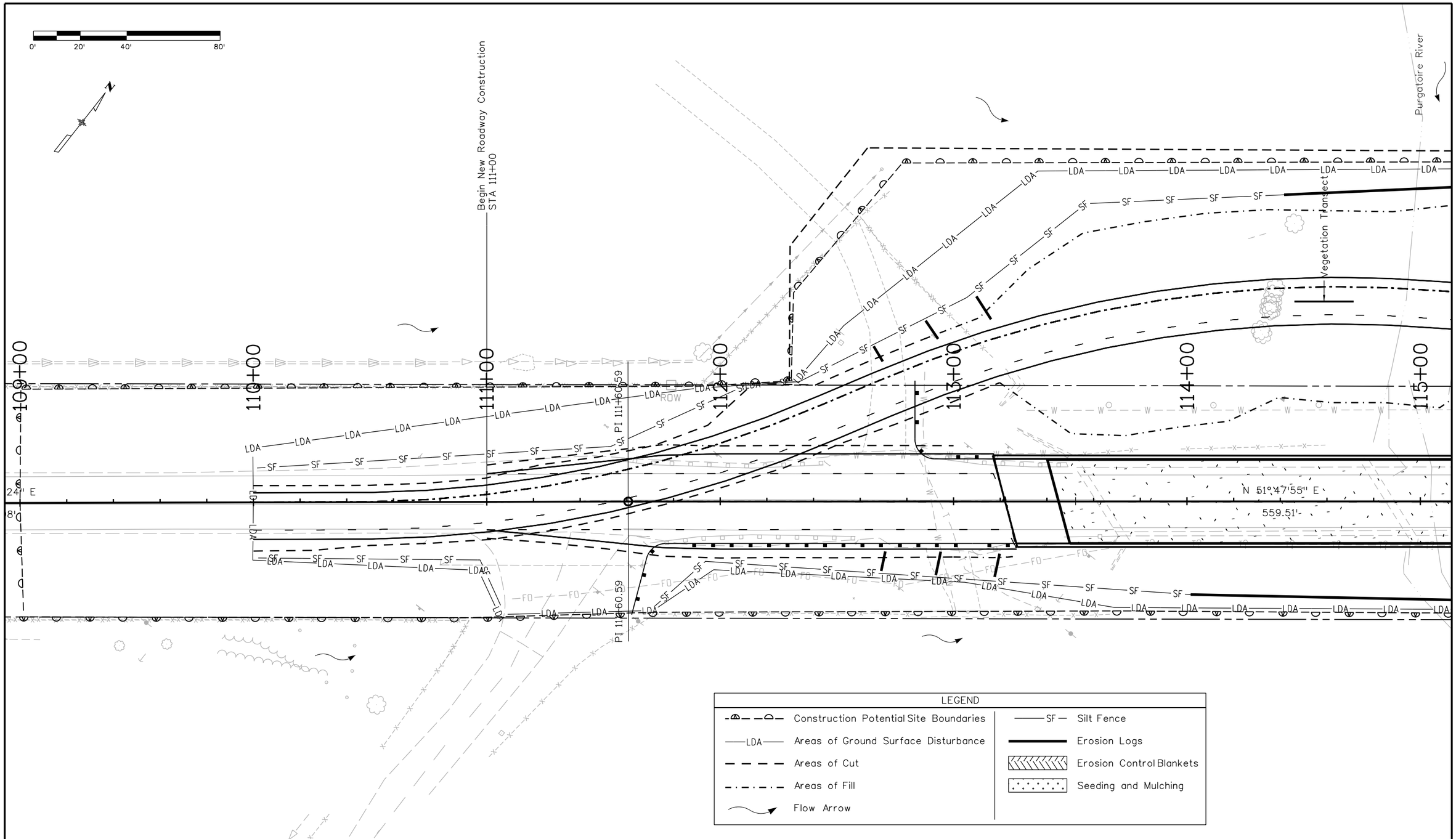

Print Date: 1/31/2013	Sheet Revisions	Colorado Department of Transportation	As Constructed
File Name: 18208_SWMP_Interim.dgn	Date: / Comments / Init.	902 Erie Avenue, Pueblo, CO 81001, Phone: 719-546-5439 FAX: 719-546-5702	No Revisions:
Horiz. Scale: 1:40 Vert. Scale: As Noted		Region 2 JDH	Revised:
Unit Information Unit Leader Initials			Void:

INTERIM STORMWATER MANAGEMENT SITE MAP

Designer:	jlb	Structure Numbers	0-19-R
Detailer:	jlb		
Sheet Subset:	SWMP	Subset Sheets:	5 of 8

Project No./Code
FBR 3501-013
18208
Sheet Number 58

bilingsj 11:01:21 AM c:\projectwise\pwz_working\d0224696\18208_SWMP_Interim.dgn

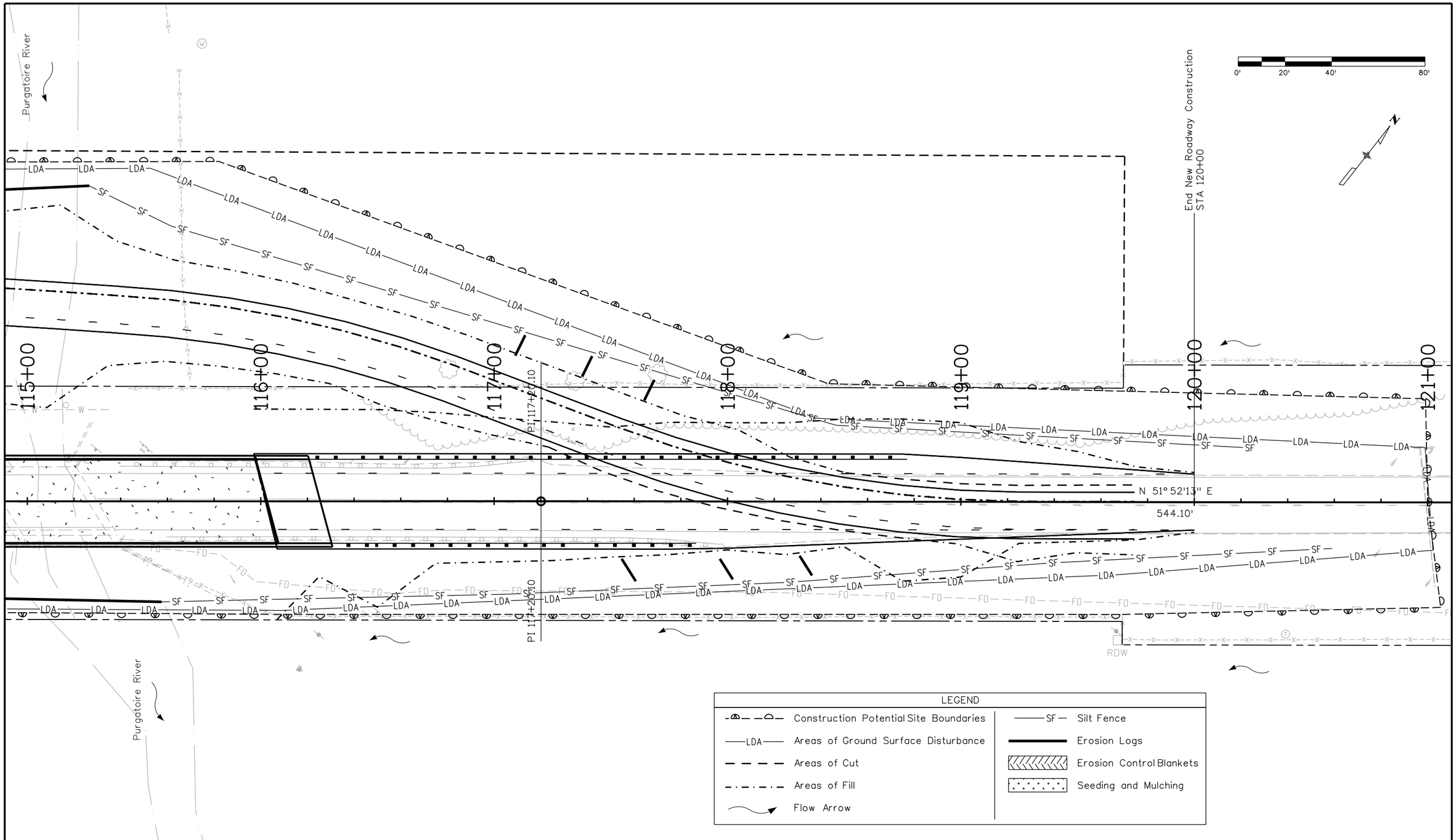

Print Date: 1/31/2013	Sheet Revisions	Colorado Department of Transportation	As Constructed
File Name: 18208_SWMP_Interim2.dgn	Date: / Comments / Init.	902 Erie Avenue, Pueblo, CO 81001	No Revisions:
Horiz. Scale: 1:40 Vert. Scale: As Noted		Phone: 719-546-5439 FAX: 719-546-5702	Revised:
Unit Information Unit Leader Initials		Region 2 JDH	Void:

INTERIM STORMWATER MANAGEMENT SITE MAP

Designer:	jlb	Structure Numbers	0-19-R
Detailer:	jlb		
Sheet Subset:	SWMP	Subset Sheets:	6 of 8

Project No./Code
FBR 3501-013
18208
Sheet Number 59

billingsj 11:03:18 AM c:\projectwise\pwz_working\d0224696\18208_SWMP_Interim2.dgn

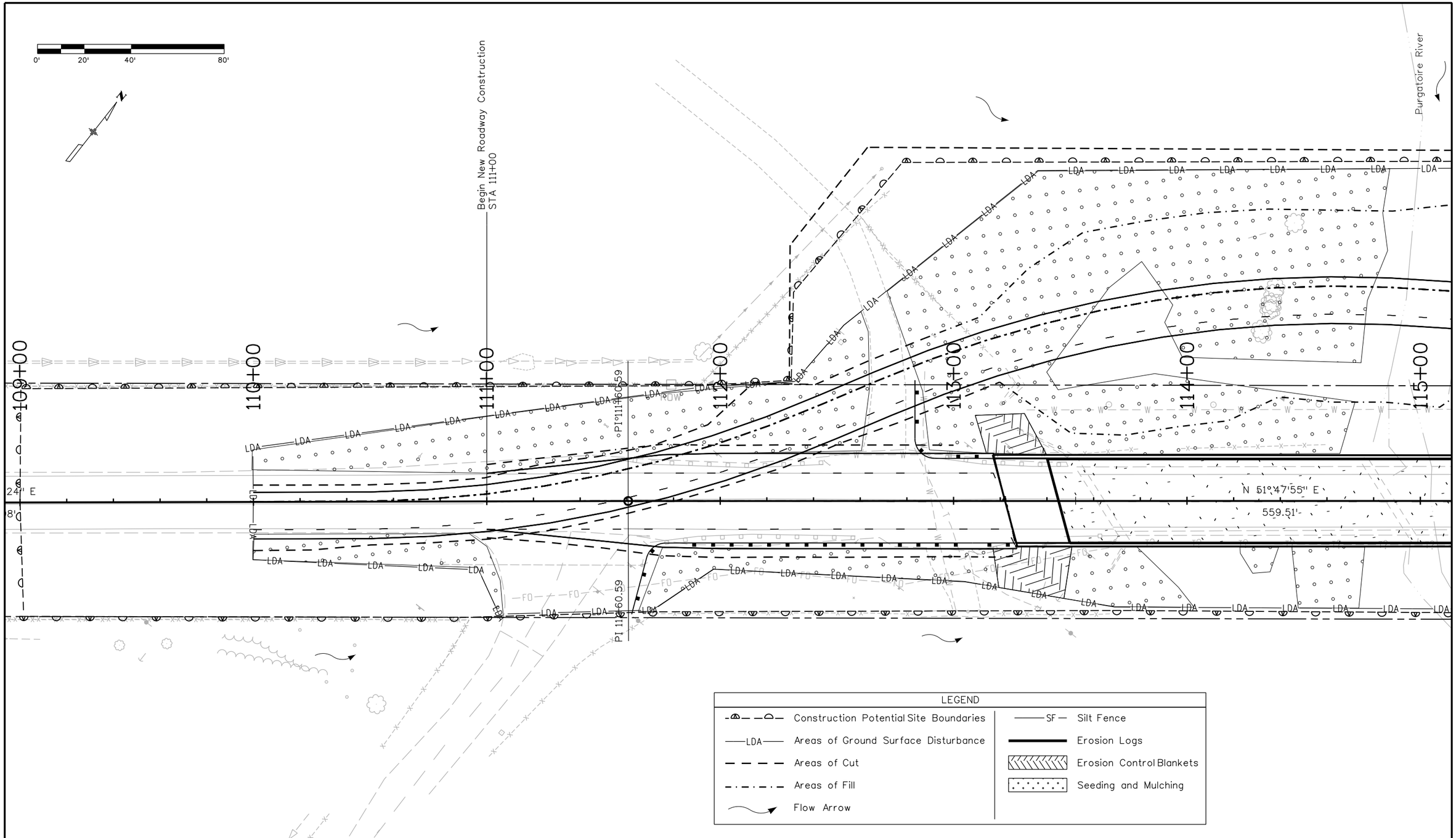

Print Date: 1/31/2013	Sheet Revisions	Colorado Department of Transportation	As Constructed
File Name: 18208_SWMP_Final.dgn	Date: / Comments / Init.	902 Erie Avenue, Pueblo, CO 81001, Phone: 719-546-5439 FAX: 719-546-5702	No Revisions:
Horiz. Scale: 1:40 Vert. Scale: As Noted		Region 2 JDH	Revised:
Unit Information Unit Leader Initials			Void:

FINAL STORMWATER MANAGEMENT SITE MAP

Designer:	jlb	Structure Numbers	0-19-R
Detailer:	jlb		
Sheet Subset:	SWMP	Subset Sheets:	7 of 8

Project No./Code
FBR 3501-013
18208
Sheet Number 60

billingsj 11:05:44 AM c:\projectwise\pwz_working\d0224696\18208_SWMP_Final.dgn

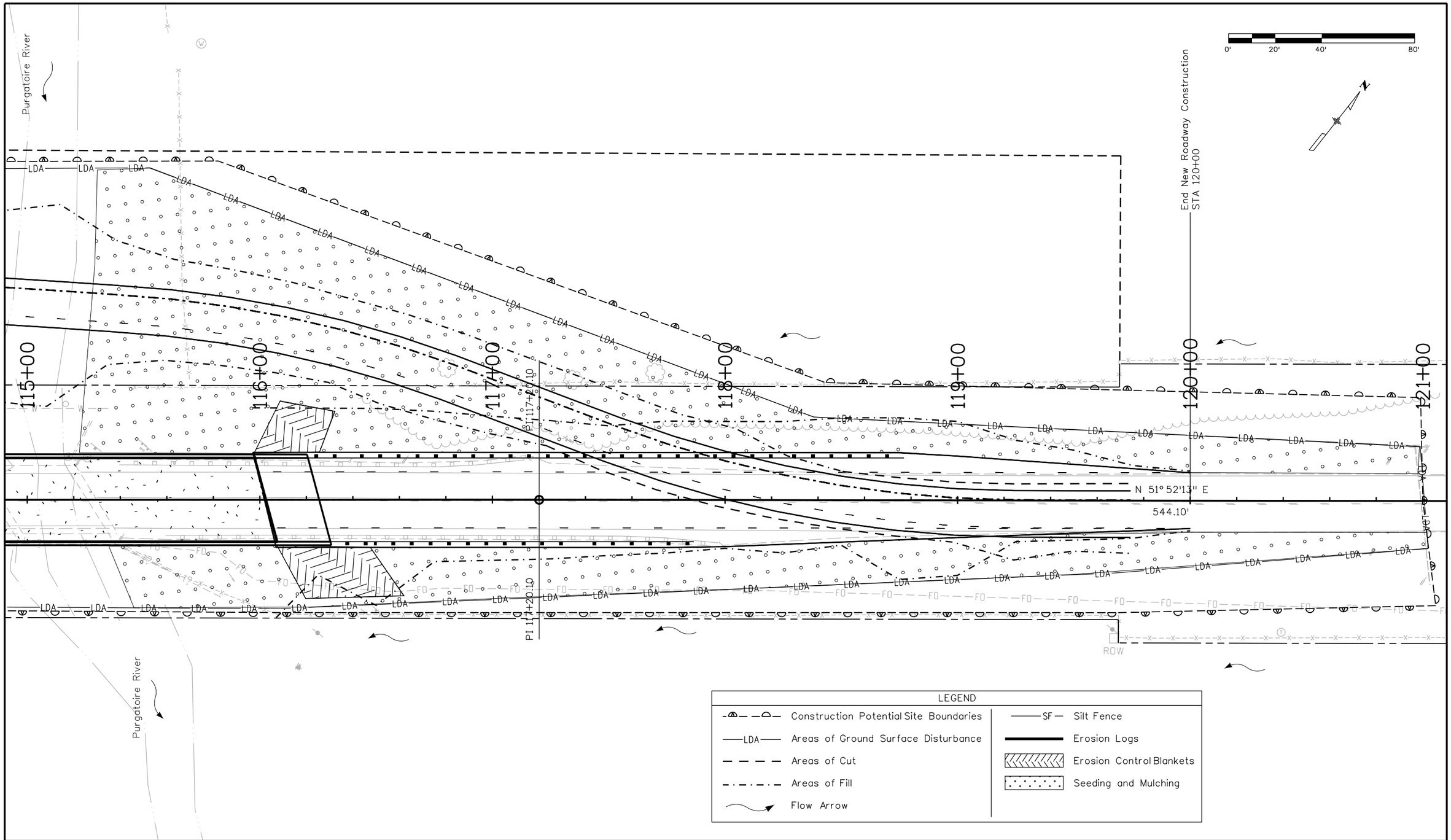

Print Date: 1/31/2013			
File Name: 18208_SWMP_Final2.dgn			
Horiz. Scale: 1:40	Vert. Scale: As Noted		
Unit Information	Unit Leader Initials		

Sheet Revisions

Date:	Comments	Init.

Colorado Department of Transportation
DOT DEPARTMENT OF TRANSPORTATION
902 Erie Avenue
Pueblo, CO 81001
Phone: 719-546-5439 FAX: 719-546-5702
Region 2 JDH

As Constructed

No Revisions:

Revised:

Void:

FINAL STORMWATER MANAGEMENT SITE MAP

Designer:	jlb	Structure Numbers	0-19-R
Detailer:	jlb		
Sheet Subset:	SWMP	Subset Sheets:	8 of 8

Project No./Code

FBR 3501-013

18208

Sheet Number 61

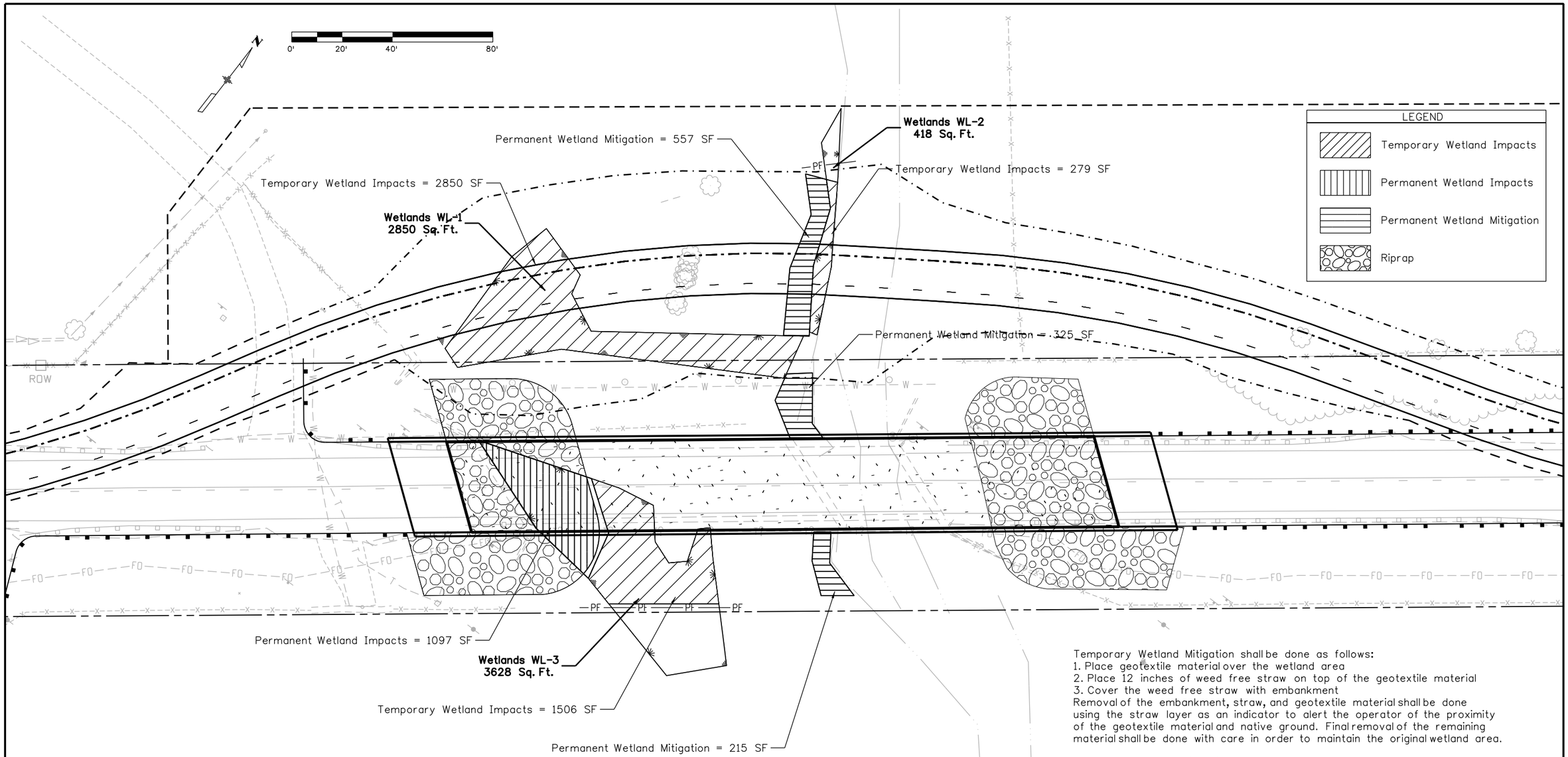

Temporary Wetland Mitigation shall be done as follows:
1. Place geotextile material over the wetland area
2. Place 12 inches of weed free straw on top of the geotextile material
3. Cover the weed free straw with embankment

Removal of the embankment, straw, and geotextile material shall be done using the straw layer as an indicator to alert the operator of the proximity of the geotextile material and native ground. Final removal of the remaining material shall be done with care in order to maintain the original wetland area.

Permanent Wetland Mitigation shall be done as follows:
1. The top 18 inches of wetland topsoil shall be excavated from the riprap and pier locations.
2. The excavated wetland topsoil shall be stockpiled on the project site.
3. The areas identified as Wetland Mitigation Site(s) shall be excavated to a depth as directed by the Project Engineer/CDOT Biologist. Excavation will be approximatedly 24-30 inches.
4. The salvaged wetland topsoil shall be placed in the wetland mitigation site.
5. Willow sprigging (brush layer cuttings) shall be done in each of the mitigation sites per Standard Specification 214. Density of willow sprigging shall be three per square yard.

Payment for Permanent Wetland Mitigation will be made under Stockpile Wetland Topsoil.

TABULATION OF WETLAND & RIPARIAN MITIGATION ITEMS

PAY ITEM	DESCRIPTION	UNIT	QUANTITY
202	REMOVAL OF TREE	(EA)	24
207	STOCKPILE WETLAND TOPSOIL	(CY)	60
214	DECIDUOUS TREE (1.5 INCH CALIPER)(COTTONWOOD TREE)(*Populus deltoides*)	(EA)	24
214	BRUSH LAYER CUTTING	(EA)	365
607	FENCE (PLASTIC)	(LF)	100

24 Deciduous Tree (1.5 Inch Caliper)(Cottonwood Tree) (Populus deltoides) shall be placed at locations as determined by the CDOT Biologist as directed by the Project Engineer

Print Date: 1/31/2013
File Name: 18208DES_Wetlands_Plan01.dgn
Horiz. Scale: 1:40 Vert. Scale: As Noted
Unit Information Unit Leader Initials

R-X

Sheet Revisions		
Date:	Comments	Init.

Colorado Department of Transportation
DOT DEPARTMENT OF TRANSPORTATION
902 Erie Avenue
Pueblo, CO 81001
Phone: 719-546-5439 FAX: 719-546-5702
Region 2 JDH

As Constructed
No Revisions:
Revised:
Void:

WETLANDS and RIPARIAN MITIGATION PLAN SHEET

Designer: jlb
Detailer: jlb
Structure Numbers: 0-19-H
Sheet Subset: WETLANDS
Subset Sheets: 1 of 1

Project No./Code
FBR 3501-013
18208
Sheet Number 62

billingsj 11:10:29 AM c:\projectwise\pwz_working\d0224696\18208DES_Wetlands_Plan01.dgn

TO ESTABLISH GEOMETRIC CONTROL FOR THE CONSTRUCTION OF THIS PROJECT, THE DEPARTMENT HAS PROVIDED THE FOLLOWING INFORMATION:

Format *

- ■ Horizontal Control _____
- ■ Vertical Control _____
- ■ Roadway Alignment _____
- ■ Original Terrain Data _____
- □ Other: _____

* Specify the information format, ie., plan sheet, computer disk, computer printout, or other. The information marked is either contained on the plans or is available from the Engineer.

TYPE OF PROJECT

- □ Landscaping
- □ Signalization
- □ Safety Improvement
- □ Asphalt Overlay
- □ Concrete Overlay
- □ Minor Widening
- □ Major Reconstruction
- □ New Roadway Construction
- ■ Bridge Replacement
- □ Bridge Widening
- □ New Bridge
- □ Other: _____

SURVEY WORK TO BE PERFORMED BY OTHERS: _____

WORK PERFORMED BY THE CONTRACTOR'S SURVEYOR UNDER SECTION 625:

- ___ ■ Establish and Maintain Project Centerline or Engineer Approved Offset Line(s)
- ___ ■ Verification and Maintenance of Horizontal and Vertical Control
- ___ □ Verify or Determine existing grades and alignments
- ___ □ Verify or Determine existing topography
- ___ □ Clearing and Grubbing Limits (Section 201)
- ___ □ Removal Limits (Section 202)
- ___ ■ Reset Items (Section 210)
- ___ ■ Excavation and Embankment (Section 203)
  - ___ ■ Excavation
    - ___ ■ Unclassified
    - ___ □ Stripping
    - ___ □ Muck
    - ___ □ Rock
    - ___ □ Borrow
    - ___ □ Other: _____
    - ___ □ Potholing
  - ___ ■ Embankment
  - ___ □ Site Grading
  - ___ □ Erosion Control (Perm)
  - ___ □ Other: _____
  - ___ □ As Staked Earthwork Quantities (See General Notes)

	Slope Staking (Y/N)	Grid (Y/N)	Grade Stakes	Special Interval
Excavation	Y	-	-	-
	-	-	-	-
	-	-	-	-
	-	-	-	-
	-	-	-	-
	-	-	-	-
Embankment	Y	-	-	-
	-	-	-	-
	-	-	-	-
	-	-	-	-

- ___ ■ Landscaping
  - ___ ■ Top Soil (Section 207)
  - ___ ■ Seeding (Section 212)
  - ___ ■ Mulching (Section 213)
  - ___ □ Planting (Section 214)
  - ___ □ Herbicide (Section 217)
  - ___ □ Other: _____
- ___ ■ Erosion Control (Section 208)
  - ___ □ Seeding (Temp)
  - ___ □ Silt Fence
  - ___ □ Erosion Bales
  - ___ □ Erosion Logs
  - ___ □ Riprap (Temp)
  - ___ ■ Other: Wetlands - Existing & Proposed
- ___ ■ Roadway Bases
  - ___ ■ Untreated Subgrade
  - ___ □ Treated Subgrade
  - ___ ■ Aggregate Base Course (Section 304)
  - ___ □ Reconditioning
  - ___ □ PMBB - Plant Mix Bituminous Base
  - ___ □ Other: _____

	Grid (Y/N)	Grade (Y/N)	Special Interval	Special Offset
Roadway Bases	-	-	-	-
	-	-	-	-
	-	-	-	-
	-	-	-	-
	-	-	-	-
	-	-	-	-

- ___ ■ Pavements
  - ___ ■ HMA - Hot Mix Asphalt (Section 403)
  - ___ □ Concrete (Section 412)
  - ___ □ Heating & Scarifying Treatment
  - ___ □ Prime Coat, Tack Coat & Rejuvenating Agent (Section 407)
  - ___ □ Seal Coat or Chip Seal (Section 409)
  - ___ □ Other: _____

	Grid (Y/N)	Special Interval	Special Offset
Pavements	-	-	-
	-	-	-
	-	-	-
	-	-	-
	-	-	-
	-	-	-

- ___ ■ Roadway Elements
  - ___ □ Curb and Gutter (Section 609)
  - ___ □ Drop inlets - alignment and grades (Section 604)
  - ___ □ Retaining Walls
  - ___ ■ Guard Rail (Section 606)
  - ___ □ Sidewalk (Section 608)
  - ___ ■ Overlay Stationing
  - ___ □ Other: _____

	Tangent Interval	Curve Interval	Special Offset
Curb & Gutter	-	-	-

	Left Interval	Center Interval	Right Interval
Stationing	-	-	-

- ___ ■ Riprap (Perm) (Section 506)
- ___ ■ Slope and Ditch Paving (Section 507)
- ___ □ Minor Structures
  - ___ □ Structure Excavation limits (Section 206)
  - ___ □ Culverts (Section 603)
  - ___ □ Culverts w/ Headwalls and Wingwalls (Section 601)
  - ___ □ Concrete Box Culverts w/ Headwalls and Wingwalls
  - ___ □ Pipes (Section 603)
    - ___ □ Sanitary Sewer
    - ___ □ Storm Sewer
    - ___ □ Water
    - ___ □ Irrigation
    - ___ □ Miscellaneous
  - ___ □ Manholes (Section 604)
  - ___ □ Inlets (Section 604)
  - ___ □ Other: _____
- ___ ■ Major Structures - Overhead Signs (Section 614), Concrete Box Culverts, Bridges - and all other structures assigned a structure number
  - ___ ■ Structure Excavation limits (Section 206)
  - ___ □ Concrete Box Culverts (Section 603) w/ Headwalls and Wingwalls (Section 601)
  - ___ ■ Piling locations and cut off elevations (Section 502)
  - ___ ■ Caisson locations and elevations (Section 503)
  - ___ ■ Footing locations, alignment, and elevations
  - ___ ■ Abutment/Pier locations, alignment, and elevations
  - ___ ■ Wingwall skew angles/offsets
  - ___ □ Structural concrete form locations
  - ___ □ Substructure As-constructed survey required for Bridges (Subsection 601 .12) and Overhead signs (S-614-50)
  - ___ ■ Bridge expansion joint(s) alignment and grade (longitudinal and transverse)
  - ___ ■ Deck grades at Girder 10th or "n" th point locations and elevations
  - ___ □ Slope and Ditch Paving (Section 507)
  - ___ □ Other: _____
- ___ ■ Fencing (Section 607)
  - ___ □ Temporary
  - ___ ■ Permanent
  - ___ □ Sound Barrier
  - ___ □ Other: _____
- ___ ■ Delineators (Section 612)
  - ___ □ Temporary
  - ___ ■ Permanent
- ___ □ Lighting (Section 613) and Traffic Control Devices (Permanent) (Section 614)
  - ___ □ Signal pole locations and elevations
  - ___ □ Light pole locations and elevations
  - ___ □ Sign locations
  - ___ □ Field verify sign post locations, elevations, and lengths before fabrication.
  - ___ □ Other: _____
- ___ ■ Pavement Marking (Section 627)
  - ___ □ Striping (Temp)
  - ___ ■ Striping (Perm)
  - ___ □ Symbols
  - ___ □ Other: _____
- ___ ■ Temporary Lighting and Construction Traffic Control Devices (Section 630)
  - ___ □ Signal pole locations and elevations (Temp)
  - ___ □ Light pole locations and elevations (Temp)
  - ___ ■ Sign Locations (Temp)
  - ___ □ Other: _____
- ___ ■ Easements (Temp Staking by P.L.S. Only)
- ___ ■ Right of Way (Temp Staking by P.L.S. Only)

WORK PERFORMED BY THE CONTRACTOR'S SURVEYOR UNDER SECTION 629:

- ___ □ Monumentation (Section 629)
  - ___ □ Control
  - ___ □ Right of Way
  - ___ □ Land corners, Aliquot corners
  - ___ □ Easements
  - ___ □ Reference the specified existing monuments:** _____
  - ___ □ Replace the specified existing monuments: ** _____
  - ___ □ Locate monuments. It is estimated ___ hours are required.

NOTE: All 629 items shall include adequate research, calculations, and evaluations of evidence for monuments to be set.

** A Tabulation of Survey Monuments may be provided on the plans.

GENERAL NOTES:

1. Unless indicated otherwise on this Survey Tabulation Sheet, all survey work and staking intervals shall be done in accordance with the latest edition of the CDOT Survey Manual.
2. Adequate information for establishing lines, grades, and locations for all work items have been specified on the plans. Any additional information required to stake the item or element shall be generated by the Contractor's surveyor.
3. The Contractor's surveyor shall provide an estimate of the man-hours necessary to complete the work items indicated on this sheet. A copy of this sheet, with the estimated man-hours written on the blank line to the left of the specified items, shall be submitted with the Survey Schedule to the Engineer _____ days prior to the Presurvey Conference - Construction Survey.
4. Stakes and Monuments which are damaged or destroyed by the progress of construction shall be replaced by the Contractor at no additional cost to the Department.
5. The Contractor shall furnish an As Staked earthwork quantity to the Engineer prior to completion of twenty percent (20%) of the planned earthwork in any phase as per the CDOT Survey Manual. A printed copy of the As Staked earthwork data and a computer disk in the specified format shall be submitted to the Engineer. The Contractor shall field verify original ground cross sections at a maximum 500 feet intervals.
6. Prior to beginning work on any subsequent operation, such as placing base course or paving, the Contractor shall certify in writing to the Engineer that the final grade is within specified tolerance.
7. The Contractor's surveyor shall perform all field surveying and calculations necessary to tie plan grades into field grades.
8. The Contractor shall coordinate construction staking on the project with any utility work.
9. Fieldbooks shall contain daily records of points set and or measurements observed. The information recorded shall contain: date, crew members' names, point no., description, staking information, and sketches. If the survey information is collected electronically, information recorded shall be provided to the Project Engineer in a hard copy format that is intuitive, clear and related to the supplemental information recorded in the field books. All linear surveys, such as slope stakes and blue tops, shall have the station and offset information related to the measured information. Non-linear surveys such as structures staking shall have sketches relating electronic information, such as point numbers, to the sketch.
10. The Contractor's surveyor shall submit the following fieldbooks to the Engineer:
    - ■ Horizontal Control (Primary & Secondary)
    - ■ Vertical Control (i.e. Benchmarks)
    - ■ Property Pin Ties
    - ■ Horizontal Alignment
    - ■ Grading
    - ■ Slope Staking
    - □ Minor Structures
    - ■ Major Structures
    - □ One fieldbook for each work category shown on this sheet
    - □ Other Fieldbook(s): _____

Print Date: 1/4/2013			
File Name: 18208SURV_Tab1.dgn			
Horiz. Scale: 1:1	Vert. Scale: As Noted		
Unit Information	Unit Leader Initials		

R-X

Sheet Revisions

Date:	Comments	Init.

Colorado Department of Transportation
DOT DEPARTMENT OF TRANSPORTATION
902 Erie Avenue
Pueblo, CO 81001
Phone: 719-546-5439 FAX: 719-546-5702
Region 2 JDH

As Constructed

- No Revisions:
- Revised:
- Void:

SURVEY TABULATION SHEET

Designer:	jlb	Structure Numbers	0-19-R
Detailer:	jlb		
Sheet Subset:	SURV	Subset Sheets:	1 of 2

Project No./Code

FBR 3501-013

18208

Sheet Number 63

FED. ROAD DIST. NO.	STATE	FED. AID PROJ. NO.	SHEET NO.	TOTAL SHEETS
3	COLO.	267-H	23	

Revision - Grade Raised To Fit Str. Sta. 652+50 to 656+50 - F.S.T. - 12-24-36
Revised 1-12-37 H.A.L.

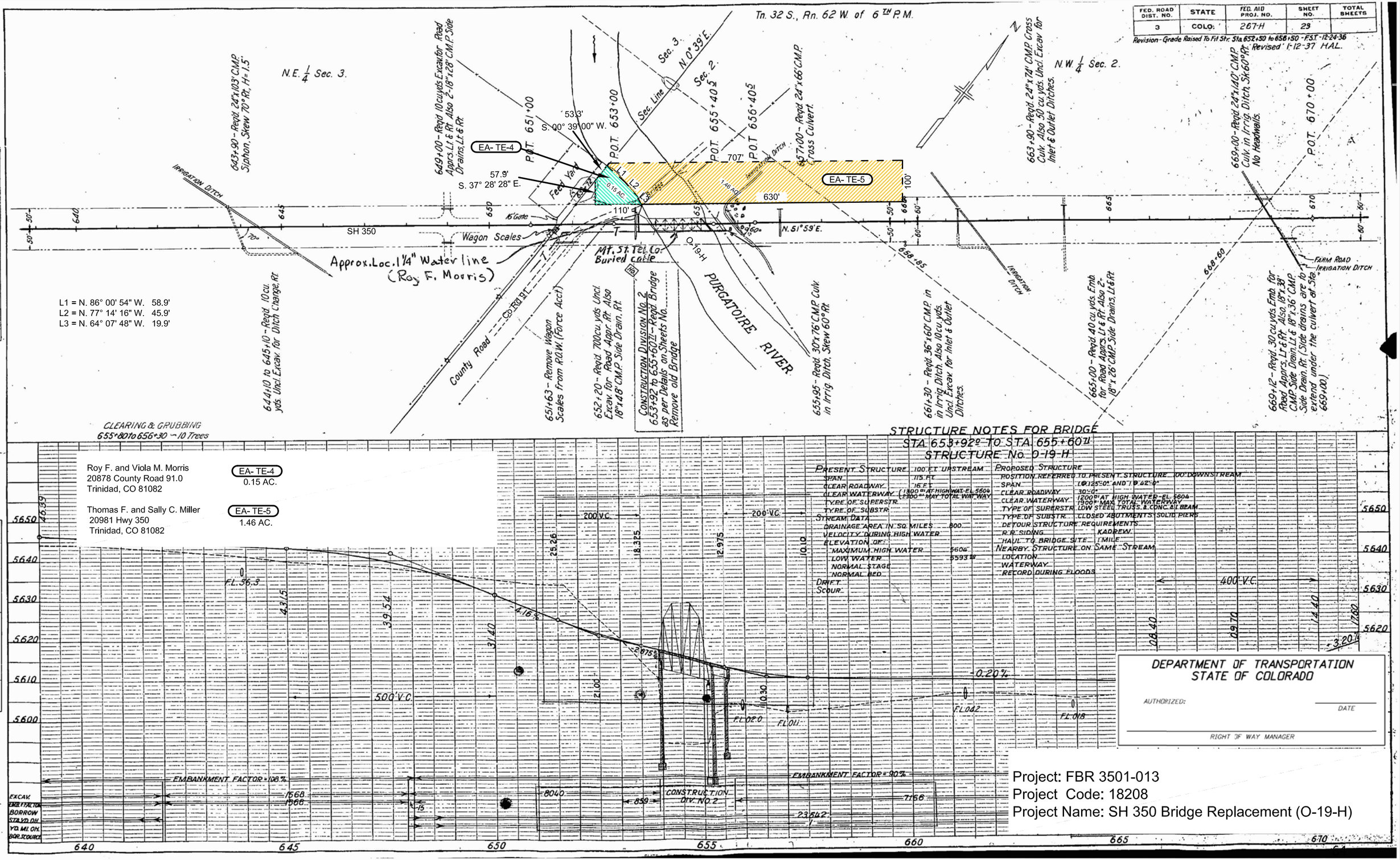

Roy F. and Viola M. Morris
20878 County Road 91.0
Trinidad, CO 81082

EA- TE-4
0.15 AC.

Thomas F. and Sally C. Miller
20981 Hwy 350
Trinidad, CO 81082

EA- TE-5
1.46 AC.

Project: FBR 3501-013
Project Code: 18208
Project Name: SH 350 Bridge Replacement (O-19-H)

CDOT Form #126Ra 7/00

COLORADO DEPARTMENT OF TRANSPORTATION

Region 2
905 Erie Ave.
Pueblo CO, 81001
Phone: (719) 546-5454 FAX: (719) 546-5414

Right of Way Plans Unit: 2153

Sheet Revisions			Sheet Revisions			Sheet Revisions		
mm/yy	Description	init	mm/yy	Description	init	mm/yy	Description	init

COLORADO DEPARTMENT OF TRANSPORTATION

Survey Control Diagram

Project Number: NH 1604-006

Project Location: US 350 – BESHOAR JCT – EAST

Project Location: M.P. 0.0 TO 8.65

Project Code:	Last Mod. Date	Subset Sheets	Sheet No.	Total No. of Sheets
12832	08-18-04	1 of 1	1	6

DEPOSITED THIS ___ DAY OF _____, 19___, AT ___H., FOR INFORMATION ONLY IN BOOK _____ OF THE COUNTY LAND SURVEYS/RIGHT OF WAY SURVEYS AT PAGE _____, RECEPTION NUMBER _____

SIGNED _____

DEPT. _____

U.S. HIGHWAY 350 – MP 0 to MP 8.65 & U.S. HIGHWAY 160C – MP 350.22 TO 350.95
Sections 26, 25 & 24, T. 32 S., R. 63 W., of the 6th P.M.,
Sections 19, 18, 17, 8, 9, 10, 3 & 2, T. 32 S., R. 62 W. of the 6th P.M.
and Sections 35 & 36, T. 31 S., R. 62 W. of the 6th P.M., all in Las Animas County, Colorado

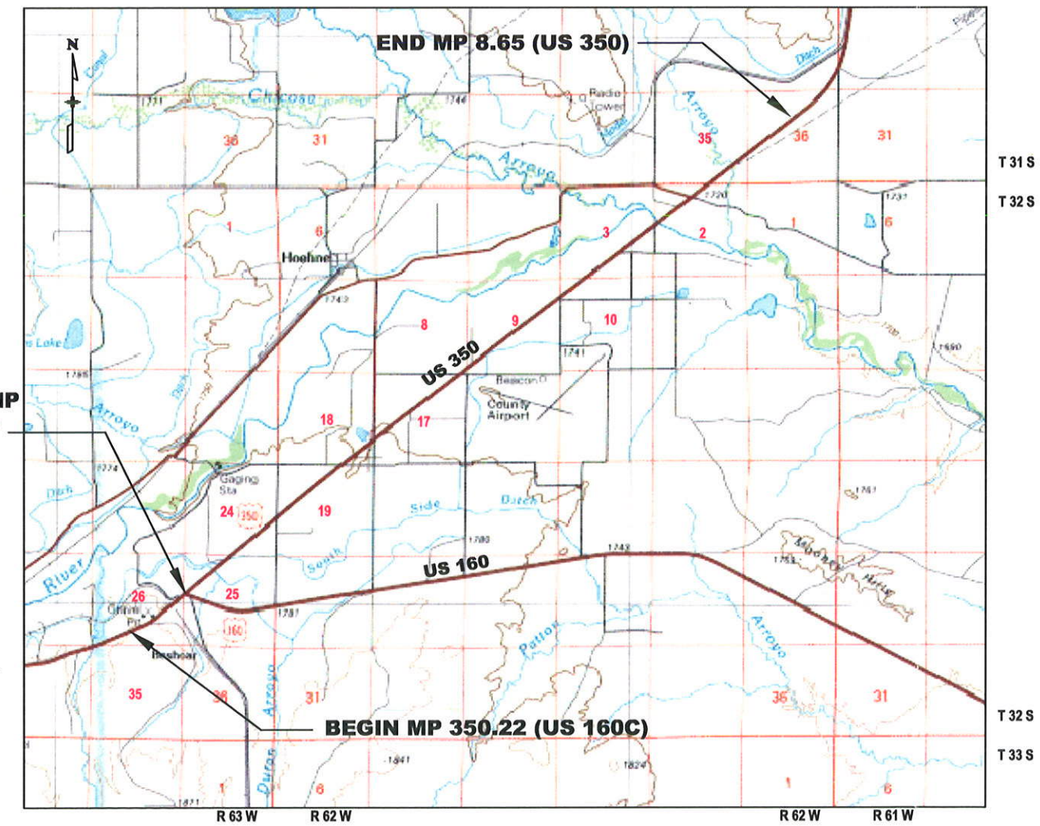

BASIS OF BEARINGS: The bearings referenced on this survey can be determined from any monuments set or found as shown on the Survey Control Diagram. The basis of bearings for project reference is a line from NGS Azimuth Mark Disk "BESHOAR AZ MK 1945" to CDOT control monument "150" having a bearing of N 56° 43' 44.7" E, at a distance of 781.18 feet located in Sections 24 & 19, T. 32 S., R. 63 W. of the 6th Principal Meridian in Las Animas County, Colorado.

BASIS OF ELEVATIONS: Project is based on NGS benchmark "F 69 1934", a standard USC&GS benchmark set in a concrete post with a NAVD 88 elevation of 1745.828 meters. F 69 1934 is a second class, vertical order benchmark.

NOTE: According to Colorado law you must commence any legal action based upon any defect on this survey within three years after you first discover such defect. In no event may any action based upon any defect in this survey be commenced more than ten years from the date of the statement shown.

NOTE: This control survey is for the use of Colorado Department of Transportation personnel. The survey is not a complete Boundary Survey. Title Policy, Title Commitment, and Title Research were not part of this control survey, therefore, easements, rights, and restrictions of record are not shown. The verification of the physical evidence with relation to easements, rights of way, property boundaries, and restriction, as described in the instruments of record, were not included in this control survey.

NOTE: No guarantee as to the accuracy of the information contained on the attached drawing is either stated or implied unless this copy bears an original signature of a professional land surveyor.

NOTE: All coordinates are obtained from from a Global Positioning System (GPS) survey based on the Colorado High Accuracy Reference Network (CHARN).

NOTE: Field survey control precision computed to meet or exceed Colorado Department of Transportation Survey Manual Minimum Horizontal Control Tolerance for a type "B" survey (+/– 0.13 ft. at 95% certainty).

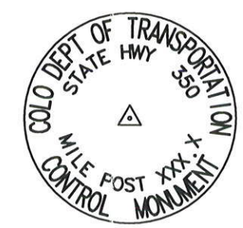

TYPICAL CDOT TYPE II CONTROL MONUMENT

▲ CM– Control Monuments set by CDOT. They were CDOT type 2 monuments, a 3-1/4" dia. aluminum control monument cap (as shown) on a 3/4" diameter aluminum rod.

SURVEYORS STATEMENT: I hereby state that this Control Survey Diagram was prepared under my direct supervision and checking, for and on the behalf of the Colorado Department of Transportation and is not a Land Survey Plat or right-of-way Survey plat, and to the best of my knowledge and belief, the information presented here is true and correct.

_____

CDOT Form #126Ra 7/00

COLORADO DEPARTMENT OF TRANSPORTATION

Region 2
905 Erie Ave.
Pueblo CO, 81001
Phone: (719) 546-5454 FAX: (719) 546-5414

Right of Way Plans Unit: 2153

Sheet Revisions			Sheet Revisions			Sheet Revisions		
mm/yy	Description	init	mm/yy	Description	init	mm/yy	Description	init

COLORADO DEPARTMENT OF TRANSPORTATION

Survey Control Diagram

Project Number: NH 1604-006

Project Location: US 350 - BESHOAR JCT - EAST

Project Location: M.P. 0.0 TO 8.65

Project Code:	Last Mod. Date	Subset Sheets	Sheet No.	Total No. of Sheets
12832	08-18-04	1 of 1	2	6

DEPOSITED THIS ___ DAY OF _____, 19__, AT ___H., FOR INFORMATION ONLY IN BOOK _____ OF THE COUNTY LAND SURVEYS/RIGHT OF WAY SURVEYS AT PAGE _____, RECEPTION NUMBER _____.

SIGNED _____

DEPT. _____

U.S. HIGHWAY 350 - MP 0 to MP 8.65 & U.S. HIGHWAY 160C - MP 350.22 TO 350.95
Sections 26, 25 & 24, T. 32 S., R. 63 W., of the 6th P.M.,
Sections 19, 18, 17, 8, 9, 10, 3 & 2, T. 32 S., R. 62 W. of the 6th P.M.
and Sections 35 & 36, T. 31 S., R. 62 W. of the 6th P.M., all in Las Animas County, Colorado

GEODETIC COORDINATES

Name	North Latitude NAD 83 / 92	West Longitude NAD 83 / 92	Ellipsiod Height (meters)	Northing CO SPC Central Zone (meters)	Easting CO SPC Central Zone (meters)	Ortho Height (meters)	Scale Factor	Description
5022	37ø 13' 24.29595" N	104ø 25' 10.53332" W	1794.615	367145.480	1010286.633	1813.702	1.000001815	CDOT CM SH 160C MP 350.22 Rt
5044	37ø 13' 30.74975" N	104ø 24' 58.95243" W	1790.773	367347.734	1010569.809	1809.872	1.000001485	CDOT CM SH 160C MP 350.44 Rt
5060	37ø 13' 36.80214" N	104ø 24' 50.98638" W	1787.688	367536.587	1010764.009	1806.791	1.000001176	CDOT CM SH 160C MP 350.60 Lt
5078	37ø 13' 41.44148" N	104ø 24' 41.45276" W	1782.758	367682.335	1010997.348	1801.875	1.000000940	CDOT CM SH 160C MP 350.78 Rt
5095	37ø 13' 40.12892" N	104ø 24' 31.05117" W	1778.897	367644.866	1011254.217	1798.029	1.000001006	CDOT CM SH 160C MP 350.95 Lt
0015	37ø 13' 46.81729" N	104ø 24' 34.58979" W	1778.379	367850.025	1011164.584	1797.508	1.000000667	CDOT CM SH 350 MP 0.15 Rt
0032	37ø 13' 53.25837" N	104ø 24' 26.82830" W	1774.723	368050.814	1011353.576	1793.859	1.000000340	CDOT CM SH 350 MP 0.32 Lt
0054	37ø 14' 00.04337" N	104ø 24' 14.22256" W	1768.954	368263.611	1011661.836	1788.115	0.999999998	CDOT CM SH 350 MP 0.54 Rt
0077	37ø 14' 08.33936" N	104ø 24' 04.15551" W	1760.607	368522.260	1011906.960	1779.761	0.999999580	CDOT CM SH 350 MP 0.77 Lt
0100	37ø 14' 13.65284" N	104ø 23' 54.01997" W	1757.373	368688.997	1012154.841	1776.540	0.999999314	CDOT CM SH 350 MP 1.00 Rt
0116	37ø 14' 19.68290" N	104ø 23' 47.10145" W	1753.979	368876.893	1012323.164	1773.165	0.999999012	CDOT CM SH 350 MP 1.16 Lt
0135	37ø 14' 25.60040" N	104ø 23' 38.08050" W	1750.919	369061.937	1012543.336	1770.103	0.999998717	CDOT RM (Beshoar Az)MP 1.35 Lt
0150	37ø 14' 29.75950" N	104ø 23' 29.94355" W	1748.110	369192.523	1012742.355	1767.297	0.999998510	CDOT CM SH 350 MP 1.50 Rt
0169	37ø 14' 37.06022" N	104ø 23' 20.97306" W	1745.343	369420.203	1012960.758	1764.553	0.999998147	CDOT CM SH 350 MP 1.69 Lt
0187	37ø 14' 42.38100" N	104ø 23' 10.78576" W	1743.635	369587.211	1013209.864	1762.852	0.999997884	CDOT CM SH 350 MP 1.87 Rt
0204	37ø 14' 49.39281" N	104ø 23' 02.21114" W	1741.944	369805.881	1013418.595	1761.166	0.999997538	CDOT CM SH 350 MP 2.04 Lt
0223	37ø 14' 55.27201" N	104ø 22' 51.55594" W	1740.026	369990.255	1013679.004	1759.263	0.999997249	CDOT CM SH 350 MP 2.23 Rt
0239	37ø 15' 01.00643" N	104ø 22' 44.37698" W	1738.680	370169.146	1013853.793	1757.925	0.999996967	CDOT CM SH 350 MP 2.39 Lt
0255	37ø 15' 05.22842" N	104ø 22' 35.27150" W	1735.252	370301.990	1014076.608	1754.492	0.999996761	CDOT CM SH 350 MP 2.55 Rt
0271	37ø 15' 11.05484" N	104ø 22' 27.94225" W	1738.096	370483.770	1014255.050	1757.352	0.999996476	CDOT CM SH 350 MP 2.71 Lt
0285	37ø 15' 14.95885" N	104ø 22' 19.78347" W	1736.217	370606.540	1014454.641	1755.478	0.999996286	CDOT CM SH 350 MP 2.85 Rt
0299	37ø 15' 21.34019" N	104ø 22' 11.38115" W	1735.432	370805.755	1014659.303	1754.705	0.999995976	CDOT RM (STA 467+45)MP 2.99 Lt
0319	37ø 15' 27.12609" N	104ø 21' 59.85933" W	1733.002	370987.551	1014941.041	1752.278	0.999995695	CDOT CM SH 350 MP 3.19 Rt
0338	37ø 15' 33.93531" N	104ø 21' 51.12633" W	1730.881	371200.066	1015153.669	1750.177	0.999995366	CDOT CM SH 350 MP 3.38 Lt
0353	37ø 15' 37.78061" N	104ø 21' 42.64470" W	1729.618	371321.146	1015361.206	1748.917	0.999995181	CDOT CM SH 350 MP 3.53 Rt
0367	37ø 15' 43.06492" N	104ø 21' 36.32472" W	1728.010	371485.939	1015514.936	1747.323	0.999994927	CDOT CM SH 350 MP 3.67 Lt
0385	37ø 15' 48.05271" N	104ø 21' 26.07617" W	1726.320	371642.778	1015765.563	1745.636	0.999994687	CDOT CM SH 350 MP 3.85 Rt
0400	37ø 15' 53.93840" N	104ø 21' 18.72660" W	1725.510	371826.427	1015944.417	1744.840	0.999994406	CDOT CM SH 350 MP 4.00 Lt
0416	37ø 15' 58.15322" N	104ø 21' 09.60896" W	1724.059	371959.110	1016167.456	1743.394	0.999994205	CDOT CM SH 350 MP 4.16 Rt
0431	37ø 16' 03.51575" N	104ø 21' 03.19089" W	1722.041	372126.359	1016323.545	1741.377	0.999993949	CDOT CM SH 350 MP 4.31 Lt
0445	37ø 16' 07.25459" N	104ø 20' 54.81752" W	1720.446	372244.153	1016528.415	1739.795	0.999993772	CDOT CM SH 350 MP 4.45 Rt
0458	37ø 16' 12.01739" N	104ø 20' 49.39780" W	1719.657	372392.618	1016660.123	1739.013	0.999993546	CDOT CM SH 350 MP 4.58 Lt
0475	37ø 16' 16.85881" N	104ø 20' 39.20881" W	1717.080	372544.962	1016909.290	1736.451	0.999993317	CDOT CM SH 350 MP 4.75 Rt
0490	37ø 16' 22.43244" N	104ø 20' 32.46339" W	1715.917	372718.832	1017073.336	1735.296	0.999993054	CDOT CM SH 350 MP 4.90 Lt
0510	37ø 16' 27.46896" N	104ø 20' 21.95280" W	1713.869	372877.300	1017330.332	1733.251	0.999992817	CDOT CM SH 350 MP 5.10 Rt
0524	37ø 16' 32.54802" N	104ø 20' 16.01246" W	1713.000	373035.687	1017474.720	1732.389	0.999992579	CDOT CM SH 350 MP 5.24 Lt
0538	37ø 16' 36.16111" N	104ø 20' 07.83032" W	1711.918	373149.574	1017674.889	1731.316	0.999992409	CDOT CM SH 350 MP 5.38 Rt
0555	37ø 16' 42.56497" N	104ø 19' 59.72099" W	1710.850	373349.472	1017872.184	1730.254	0.999992110	CDOT CM SH 350 MP 5.55 Lt
0571	37ø 16' 46.76240" N	104ø 19' 50.59036" W	1709.280	373481.674	1018095.478	1728.693	0.999991915	CDOT CM SH 350 MP 5.71 Rt
0590	37ø 16' 53.22143" N	104ø 19' 42.39541" W	1709.144	373683.309	1018294.843	1728.569	0.999991614	CDOT CM SH 350 MP 5.90 Lt
0603	37ø 16' 56.09478" N	104ø 19' 35.34275" W	1707.837	373774.063	1018467.450	1727.266	0.999991481	CDOT CM SH 350 MP 6.03 Rt
0619	37ø 17' 01.78822" N	104ø 19' 28.43219" W	1703.853	373951.709	1018635.460	1723.284	0.999991218	CDOT CM SH 350 MP 6.19 Lt
0636	37ø 17' 06.39146" N	104ø 19' 18.81936" W	1700.906	374096.591	1018870.445	1720.336	0.999991005	CDOT CM SH 350 MP 6.36 Rt
0655	37ø 17' 12.82962" N	104ø 19' 10.30741" W	1697.184	374297.700	1019077.591	1716.637	0.999990709	CDOT CM SH 350 MP 6.55 Lt
0672	37ø 17' 17.32817" N	104ø 19' 00.80861" W	1689.638	374439.332	1019309.791	1709.090	0.999990503	CDOT CM SH 350 MP 6.72 Rt
0686	37ø 17' 22.62937" N	104ø 18' 54.47510" W	1691.022	374604.723	1019463.710	1710.492	0.999990260	CDOT CM SH 350 MP 6.86 Lt
0700	37ø 17' 25.90462" N	104ø 18' 46.80712" W	1696.750	374708.083	1019651.283	1716.220	0.999990110	CDOT CM SH 350 MP 7.00 Rt
0716	37ø 17' 31.42528" N	104ø 18' 39.91337" W	1706.331	374880.422	1019818.902	1725.810	0.999989859	CDOT CM SH 350 MP 7.16 Lt
0727	37ø 17' 33.97488" N	104ø 18' 33.86644" W	1711.385	374960.912	1019966.826	1730.874	0.999989743	CDOT CM SH 350 MP 7.27 Rt
0738	37ø 17' 38.15630" N	104ø 18' 29.12304" W	1706.557	375091.297	1020082.002	1726.046	0.999989553	CDOT CM SH 350 MP 7.38 Lt
0758	37ø 17' 43.88649" N	104ø 18' 17.50966" W	1694.803	375271.590	1020365.752	1714.298	0.999989294	CDOT CM SH 350 MP 7.58 Rt
0774	37ø 17' 49.31399" N	104ø 18' 10.72809" W	1693.800	375441.036	1020530.619	1713.302	0.999989049	CDOT CM SH 350 MP 7.74 Lt
0790	37ø 17' 53.83027" N	104ø 18' 01.45182" W	1697.928	375583.184	1020757.275	1717.439	0.999988845	CDOT CM SH 350 MP 7.90 Rt
0805	37ø 18' 01.13735" N	104ø 17' 51.42420" W	1705.755	375811.606	1021001.318	1725.267	0.999988517	CDOT CM SH 350 MP 8.05 Lt
0821	37ø 18' 05.21332" N	104ø 17' 42.85208" W	1710.486	375939.971	1021210.790	1730.007	0.999988334	CDOT CM SH 350 MP 8.21 Rt
0836	37ø 18' 10.57679" N	104ø 17' 36.01019" W	1714.988	376107.479	1021377.137	1734.514	0.999988095	CDOT CM SH 350 MP 8.36 Lt
0850	37ø 18' 14.99850" N	104ø 17' 27.41778" W	1712.431	376246.517	1021586.958	1731.966	0.999987898	CDOT CM SH 350 MP 8.50 Rt
0865	37ø 18' 20.05458" N	104ø 17' 20.73146" W	1715.939	376404.508	1021749.583	1735.482	0.999987673	CDOT CM SH 350 MP 8.65 Lt
5629	37ø 21' 37.51515" N	104ø 15' 07.26240" W	1697.960	382534.606	1024954.763	1717.630	0.999979363	USGS BC HARN POINT "5629"
E069	37ø 17' 49.98394" N	104ø 19' 48.92765" W	1723.514	375431.049	1018112.029	1742.966	0.999989018	USGS BENCH MARK "E 69"
F069	37ø 18' 43.20846" N	104ø 17' 14.55786" W	1726.276	377120.215	1021892.335	1745.828	0.999986652	USGS BENCH MARK "F 69"
J21R	37ø 14' 38.14668" N	104ø 29' 53.58080" W	1853.091	369344.274	1003284.687	1872.035	0.999998094	NGS DEEP ROD "J 21 RESET"
STOK	37ø 15' 39.19521" N	104ø 20' 15.51349" W	1733.170	371391.189	1017507.478	1752.550	0.999995113	NGS BC HARN POINT "STOKES"

PROJECT COORDINATE PARAMETERS

All calculations were based on a point at milepost 4.45 on US Highway 350 with the following values:
Latitude = 37° 16' 07.25459" North
Longitude = 104° 20' 54.81752" West
Ellipsoidal Height = 1720.446 meters
Orthometric Height = 1739.795 meters
Scale Factor = 0.9999937718
Combined Factor = 0.9990987885

GRID COORDINATES TO PROJECT COORDINATES

Northing Reduction = 300,000 Easting Reduction = 1,000,000
Meter to US Survey Feet conversion factor = (3937/1200)

The project coordinates were derived by using the GPS Network Base Point's (CM 0445) combined factor of 0.9990987885.

{[(State Plane Coordinates (m) / 0.9990987885) - (northing (300,000 m) or easting (1,00,000 m) reduction)] x 3937/1200 (ft/m)} = Project coordinates (ft)

PROJECT COORDINATES

Name	Northing (feet)	Easting (feet)	Elevation (feet)
5022	220629.519	34674.383	5950.454
5044	221293.264	35603.697	5937.888
5060	221913.033	36241.012	5927.780
5078	222391.343	37006.772	5911.652
5095	222268.378	37849.752	5899.034
0015	222941.657	37555.598	5897.324
0032	223600.599	38175.823	5885.352
0054	224298.942	39187.455	5866.507
0077	225147.764	39991.891	5839.099
0100	225694.953	40805.375	5828.532
0116	226311.583	41357.768	5817.459
0135	226918.850	42080.317	5807.413
0150	227347.402	42733.447	5798.207
0169	228094.588	43450.193	5789.204
0187	228642.669	44267.696	5783.624
0204	229360.287	44952.698	5778.092
0223	229965.358	45807.297	5771.849
0239	230552.434	46380.909	5767.459
0255	230988.393	47112.132	5756.196
0271	231584.950	47697.736	5765.579
0285	231987.852	48352.742	5759.431
0299	232641.623	49024.391	5756.895
0319	233238.233	49948.986	5748.932
0338	233935.655	50646.778	5742.039
0353	234333.006	51327.861	5737.905
0367	234873.816	51832.363	5732.676
0385	235388.523	52654.858	5727.141
0400	235991.216	53241.814	5724.529
0416	236426.646	53973.773	5719.785
0431	236975.516	54486.016	5713.168
0445	237362.086	55158.347	5707.977
0458	237849.311	55590.583	5705.412
0475	238349.264	56408.285	5697.006
0490	238919.863	56946.642	5693.217
0510	239439.918	57790.041	5686.508
0524	239959.702	58263.886	5683.680
0538	240333.452	58920.790	5680.159
0555	240989.466	59568.263	5676.675
0571	241423.320	60301.058	5671.554
0590	242085.035	60955.323	5671.147
0603	242382.868	61521.777	5666.872
0619	242965.857	62073.143	5653.808
0636	243441.323	62844.304	5644.136
0655	244101.312	63524.107	5632.000
0672	244566.112	64286.128	5607.239
0686	245108.885	64791.252	5611.839
0700	245448.087	65406.819	5630.632
0716	246013.659	65956.902	5662.095
0727	246277.808	66442.351	5678.709
0738	246705.701	66820.331	5662.869
0758	247297.376	67751.529	5624.326
0774	247853.454	68292.581	5621.058
0790	248319.950	69036.407	5634.631
0805	249069.573	69837.295	5660.314
0821	249490.834	70524.732	5675.865
0836	250040.553	71070.641	5690.651
0850	250496.843	71759.221	5682.292
0865	251015.328	72292.916	5693.827

CDOT Form #126Ro 7/00

COLORADO DEPARTMENT OF TRANSPORTATION

DOT

Region 2
905 Erie Ave.
Pueblo CO, 81001
Phone: (719) 546-5454 FAX: (719) 546-5414

Right of Way Plans Unit: 2153

Sheet Revisions			Sheet Revisions			Sheet Revisions		
mm/yy	Description	init	mm/yy	Description	init	mm/yy	Description	init

COLORADO DEPARTMENT OF TRANSPORTATION

Survey Control Diagram

Project Number: NH 1604-006

Project Location: US 350 - BESHOAR JCT - EAST

Project Location: M.P. 0.0 TO 8.65

Project Code:	Last Mod. Date	Subset Sheets	Sheet No.	Total No. of Sheets
12832	08-18-04	1 of 1	3	6

U.S. HIGHWAY 350 - MP 0 to MP 8.65 & U.S. HIGHWAY 160C - MP 350.22 TO 350.95
Sections 26, 25 & 24, T. 32 S., R. 63 W., of the 6th P.M.,
Sections 19, 18, 17, 8, 9, 10, 3 & 2, T. 32 S., R. 62 W. of the 6th P.M.
and Sections 35 & 36, T. 31 S., R. 62 W. of the 6th P.M., all in Las Animas County, Colorado

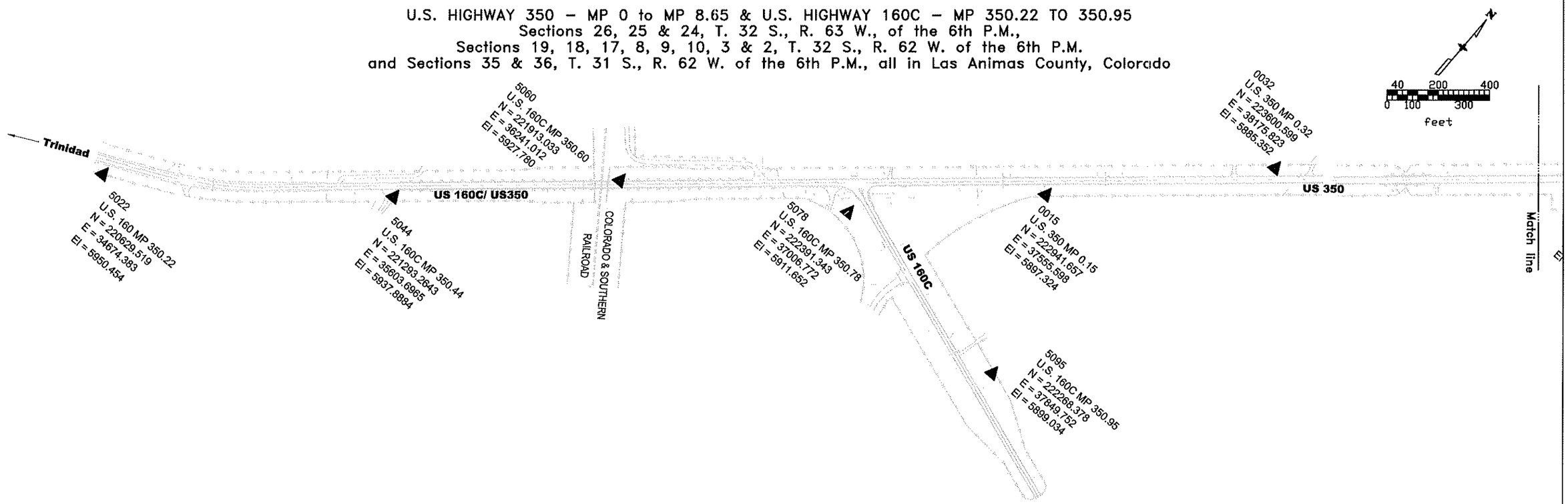

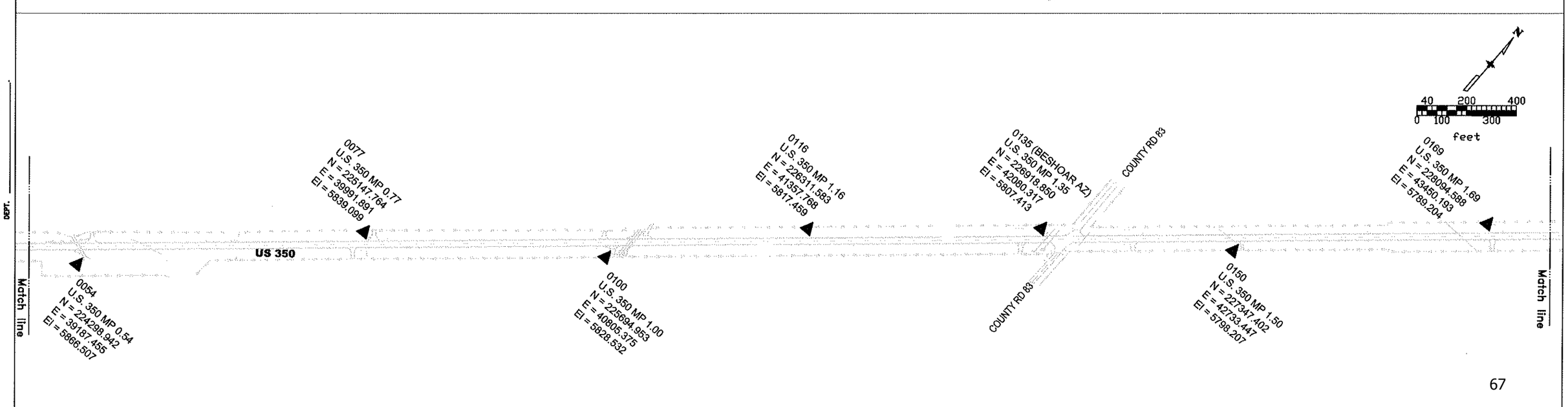

DEPOSITED THIS ___ DAY OF _____, 19___, AT ___H., FOR INFORMATION ONLY IN BOOK _____ OF THE COUNTY LAND SURVEYS/RIGHT OF WAY SURVEYS AT PAGE _____, RECEPTION NUMBER _____.

SIGNED _____.

DEPT. _____.

CDOT Form #126Ra 7/00

COLORADO DEPARTMENT OF TRANSPORTATION

DOT

Region 2
905 Erie Ave.
Pueblo CO, 81001
Phone: (719) 546-5454 FAX: (719) 546-5414

Right of Way Plans Unit: 2153

Sheet Revisions			Sheet Revisions			Sheet Revisions		
mm/yy	Description	init	mm/yy	Description	init	mm/yy	Description	init

COLORADO DEPARTMENT OF TRANSPORTATION

Survey Control Diagram Sheet

Project Number: NH 1604-006

Project Location: US 350 - BESHOAR JCT - EAST

Project Location: M.P. 0.0 TO 8.65

Project Code:	Last Mod. Date	Subset Sheets	Sheet No.	Total No. of Sheets
12832	08-18-04	1 of 1	4	8

U.S. HIGHWAY 350 - MP 0 to MP 8.65 & U.S. HIGHWAY 160C - MP 350.22 TO 350.95
Sections 26, 25 & 24, T. 32 S., R. 63 W., of the 6th P.M.,
Sections 19, 18, 17, 8, 9, 10, 3 & 2, T. 32 S., R. 62 W. of the 6th P.M.
and Sections 35 & 36, T. 31 S., R. 62 W. of the 6th P.M., all in Las Animas County, Colorado

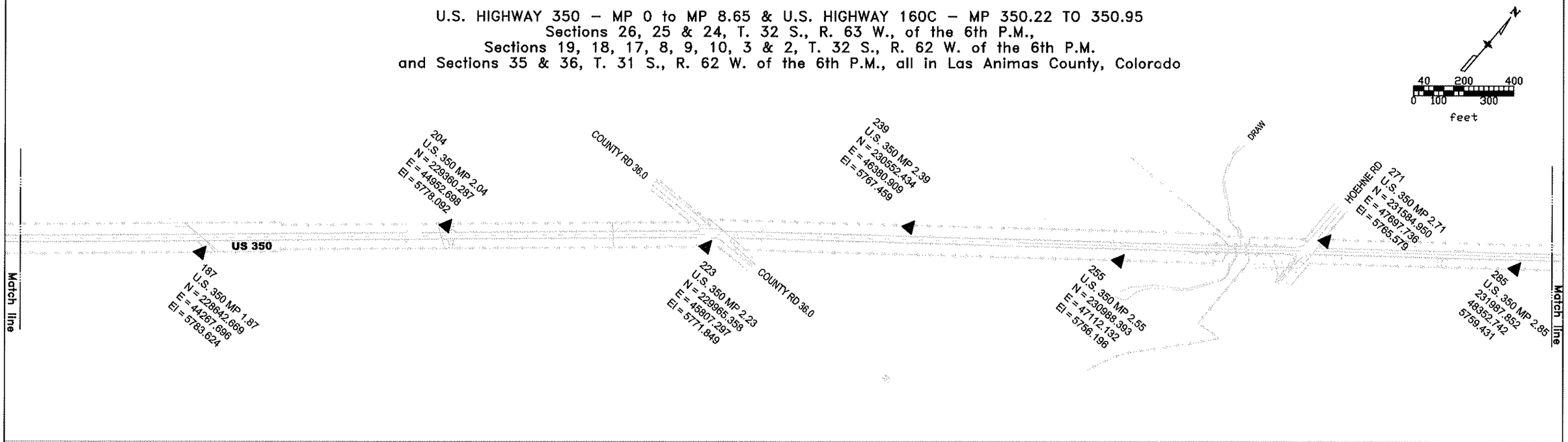

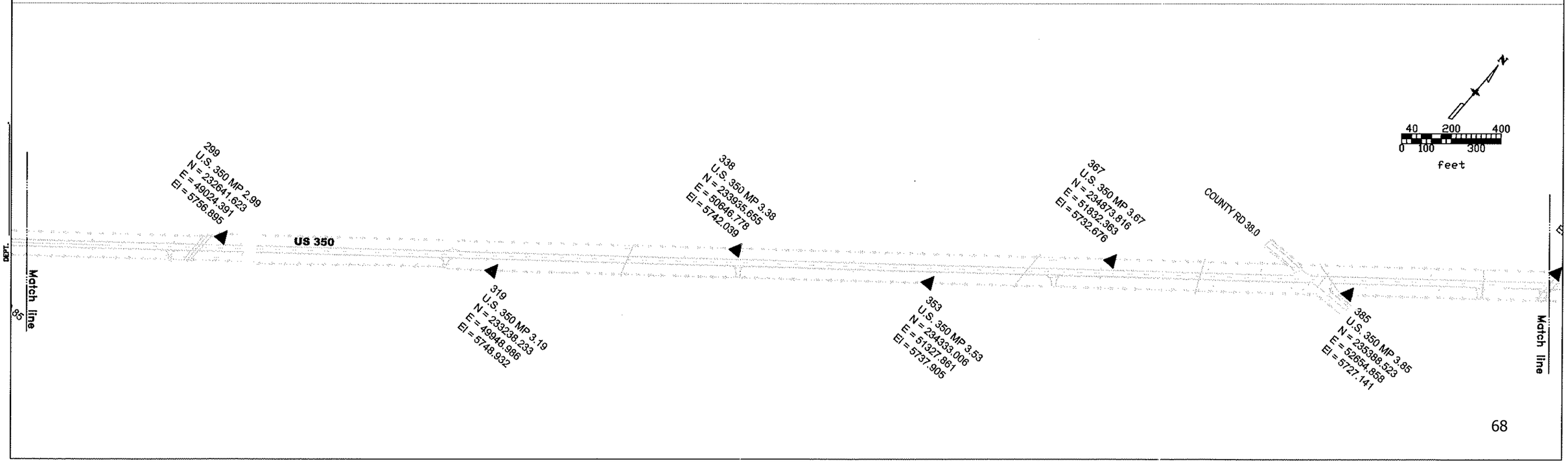

DEPOSITED THIS ___ DAY OF _____, 19___, AT ___M., FOR INFORMATION ONLY IN BOOK _____ OF THE COUNTY LAND SURVEYS/RIGHT OF WAY SURVEYS AT PAGE _____, RECEPTION NUMBER _____.

SIGNED _____

DEPT. _____

CDOT Form #126Ra 7/00

COLORADO DEPARTMENT OF TRANSPORTATION

Region 2
905 Erie Ave.
Pueblo CO, 81001
Phone: (719) 546-5454 FAX: (719) 546-5414

Right of Way Plans Unit: 2153

Sheet Revisions			Sheet Revisions			Sheet Revisions		
mm/yy	Description	init	mm/yy	Description	init	mm/yy	Description	init

COLORADO DEPARTMENT OF TRANSPORTATION

Survey Control Diagram Sheet

Project Number: NH 1604-006

Project Location: US 350 - BESHOAR JCT - EAST

Project Location: M.P. 0.0 TO 8.65

Project Code:	Last Mod. Date	Subset Sheets	Sheet No.	Total No. of Sheets
12832	08-18-04	1 of 1	5	6

U.S. HIGHWAY 350 - MP 0 to MP 8.65 & U.S. HIGHWAY 160C - MP 350.22 TO 350.95
Sections 26, 25 & 24, T. 32 S., R. 63 W., of the 6th P.M.,
Sections 19, 18, 17, 8, 9, 10, 3 & 2, T. 32 S., R. 62 W. of the 6th P.M.
and Sections 35 & 36, T. 31 S., R. 62 W. of the 6th P.M., all in Las Animas County, Colorado

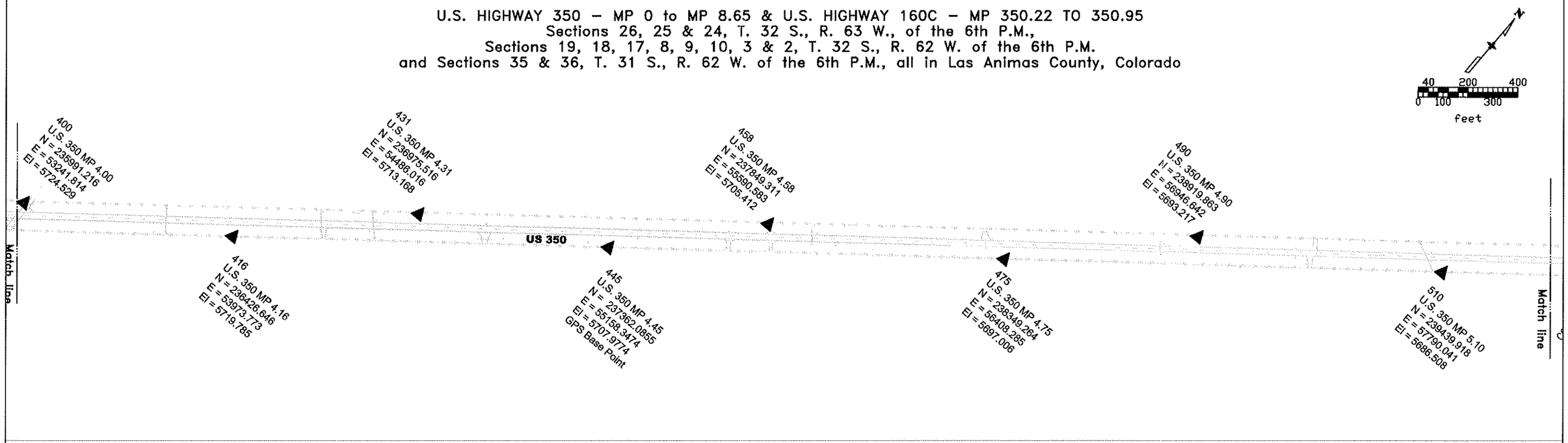

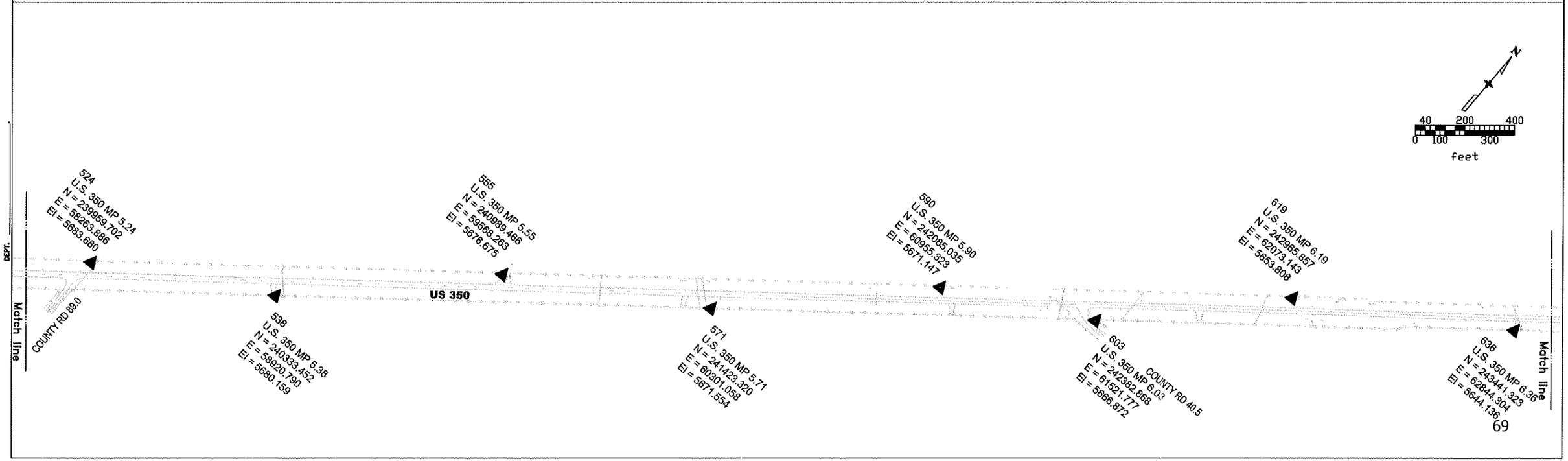

DEPOSITED THIS ____ DAY OF _____, 19___, AT ____M., FOR INFORMATION ONLY IN BOOK _____ OF THE COUNTY LAND SURVEYS/RIGHT OF WAY SURVEYS AT PAGE _____, RECEPTION NUMBER _____.

SIGNED _____

DEPT. _____

CDOT Form #126Ra 7/00

COLORADO DEPARTMENT OF TRANSPORTATION

DOT Region 2
905 Erie Ave.
Pueblo CO, 81001
Phone: (719) 546-5454 FAX: (719) 546-5414

Right of Way Plans Unit: 2153

Sheet Revisions			Sheet Revisions			Sheet Revisions		
mm/yy	Description	init	mm/yy	Description	init	mm/yy	Description	init

COLORADO DEPARTMENT OF TRANSPORTATION

Survey Control Diagram Sheet

Project Number: NH 1604-006

Project Location: US 350 - BESHOAR JCT - EAST

Project Location: M.P. 0.0 TO 8.65

Project Code:	Last Mod. Date	Subset Sheets	Sheet No.	Total No. of Sheets
12832	08-18-04	1 of 1	8	8

U.S. HIGHWAY 350 - MP 0 to MP 8.65 & U.S. HIGHWAY 160C - MP 350.22 TO 350.95
Sections 26, 25 & 24, T. 32 S., R. 63 W., of the 6th P.M.,
Sections 19, 18, 17, 8, 9, 10, 3 & 2, T. 32 S., R. 62 W. of the 6th P.M.
and Sections 35 & 36, T. 31 S., R. 62 W. of the 6th P.M., all in Las Animas County, Colorado

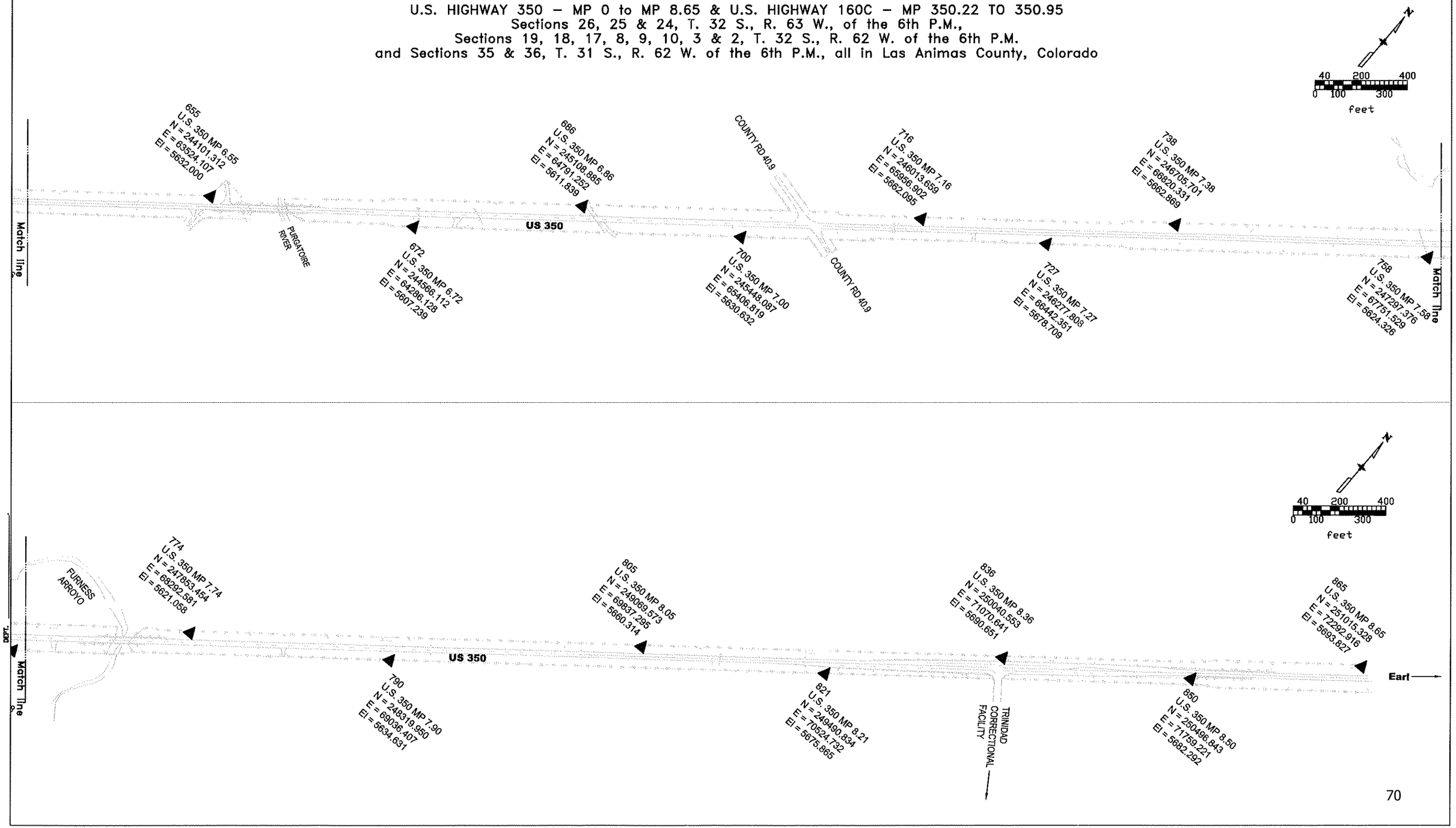

DEPOSITED THIS ___ DAY OF _____, 19____, AT ___ M., FOR INFORMATION ONLY IN BOOK _____ OF THE COUNTY LAND SURVEYS/RIGHT OF WAY SURVEYS AT PAGE _____, RECEPTION NUMBER _____

SIGNED _____

DEPT. _____