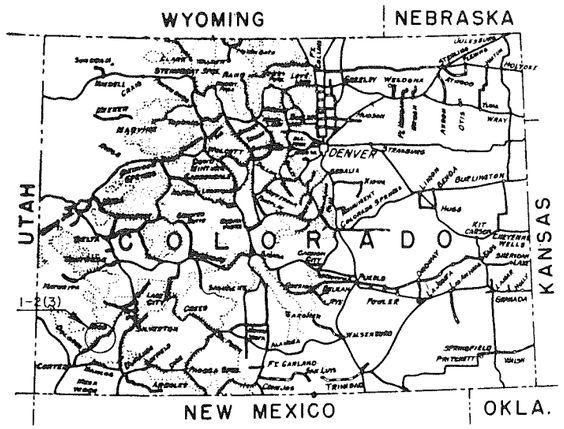

U.S. DEPARTMENT OF COMMERCE
BUREAU OF PUBLIC ROADS

Extra

REGION 9 STATE COLORADO
PROJECT I-2(3), Dolores-Rico
SHEET 1 OF ____ SHEETS

PLANS FOR PROPOSED
COLORADO FOREST HIGHWAY PROJECT I-2(3)
DOLORES-RICO
LENGTH 6.566 MILES

CLASS 2

SAN JUAN
NATIONAL FOREST

MONTEZUMA & DOLORES COUNTIES

INDEX TO SHEETS

SHEET Nº	DESCRIPTION	STATION	TO STATION
1	Title Sheet		
2	Typical Sections		
3	Summary (2 Sheets)		
57-62	Plan & Profile	1603+00	1764+50
Std. 107	Emb. Drains, Bit. Curbs, and Rundowns		
Std. 108	Metal End Sections & Fill-Gage Tables		
Std. 109	R.C.P. & Fill-Class Tables		
Std. 110	R.C. End Section & Cutoff Walls		
Std. 113	Type A and B Concrete Headwalls		
Std. 119	Underdrain		
Std. 131	Maintenance Posts & Delineators		
Std. 136	Wire Fences with Steel Posts		
Std. 143	Project Identification Signs		
Std. 151	Beam-Type Guardrail		
Std. 154	Wire Enclosed Riprap		
R9B-104	C.B.C. 7'x5'x58'	1636+10	
R9B-107	C.B.C. 5'x5'x22' Extension	1761+00	
R9B-122	C.B.C. 7'x5'x74'	1689+12	
R9B-133	Dolores River Bridge	1640+25	
RG1723 A-E.	Dolores River Bridge	1640+25	

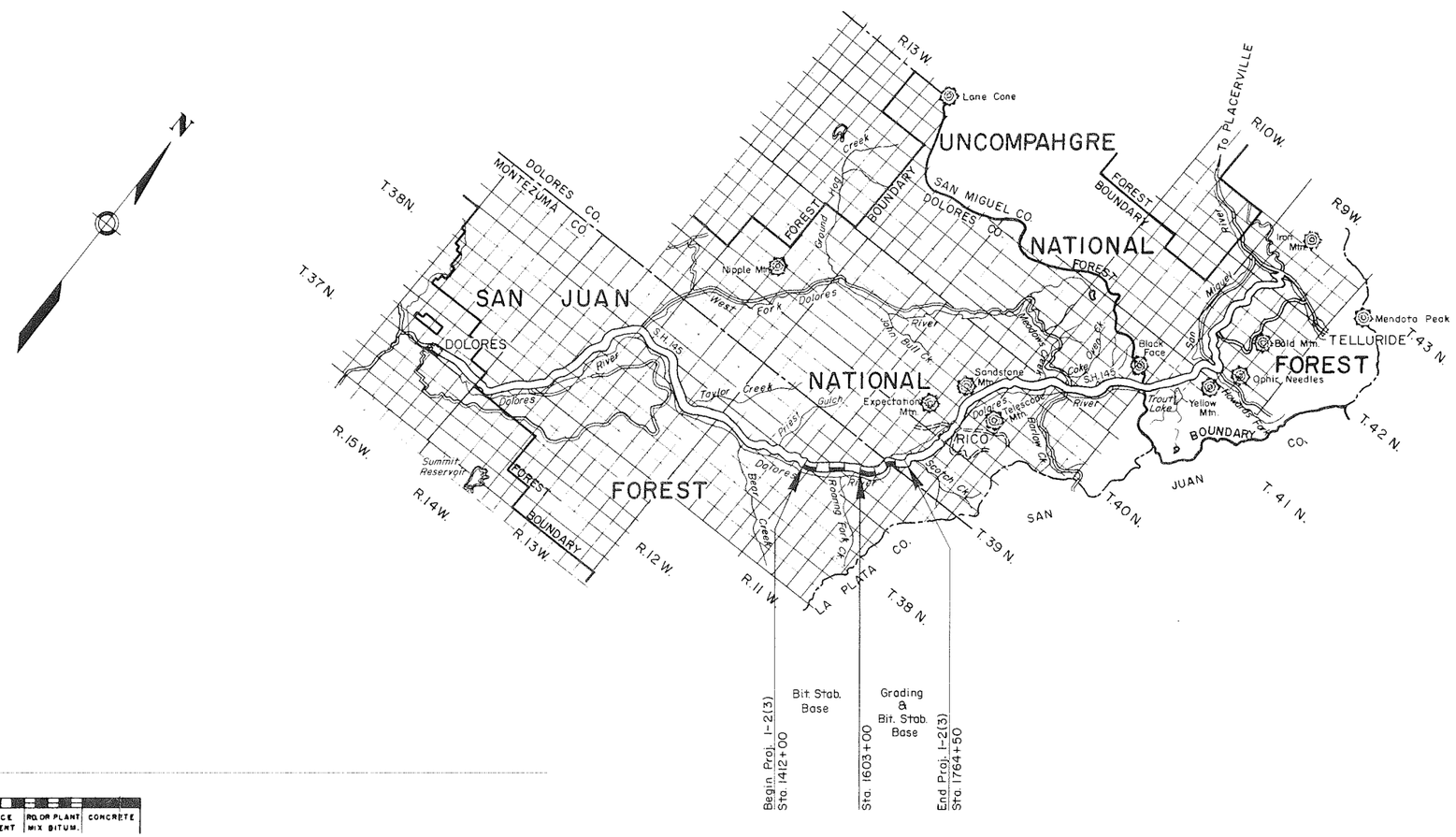

Plans prepared by: B.P.R.
Date: March, 1965

Description of Project
Improvement: Grading & Bit. Stab. Base
Roadbed Widths:
Grading: 40'
Base: 28'
Bridge: 32'
Type Codes:
Roadway: 2013
Bridge: X021

Traffic Volume
A.D.T. (1963): 200
A.D.T. (1983): 500
D.H.V.: 75
D: 65%
T: 5%
V: 50

U.S. DEPARTMENT OF COMMERCE
BUREAU OF PUBLIC ROADS
REGION NO. 9 DENVER, COLORADO

APPROVED:

_____ DATE _____ 19____
REGIONAL ENGINEER

LEGEND

EXISTING ROAD	UNIMPROVED	GRADED	REINFORCED SUBGRADE	BASE COURSE	SURFACE TREATMENT	HOT PLANT MIX BITUM.	CONCRETE

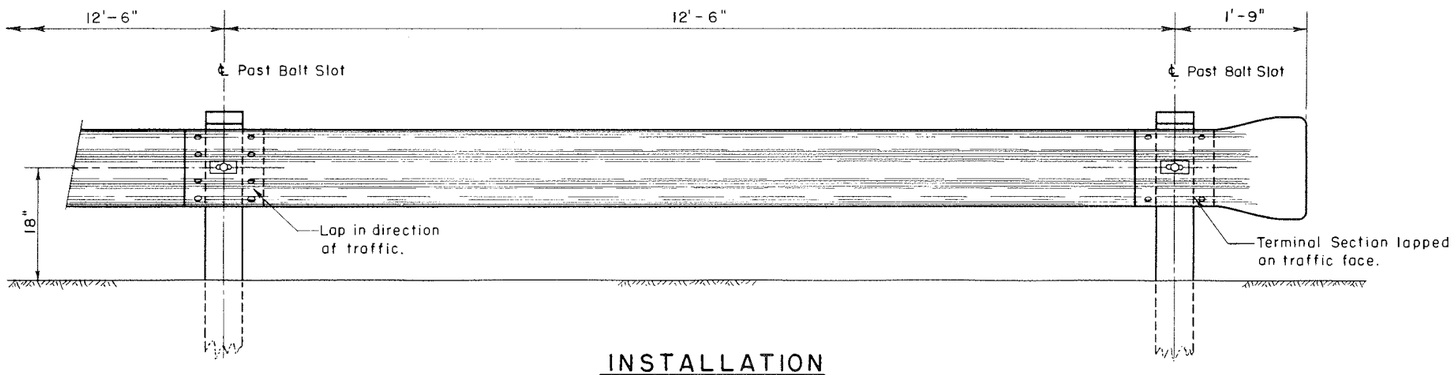

INSTALLATION

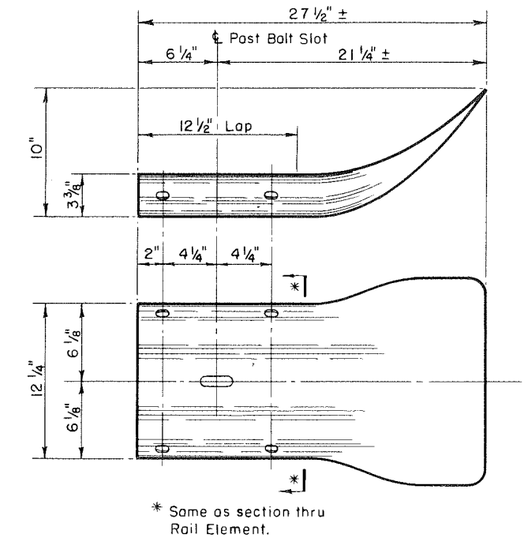

TERMINAL SECTION

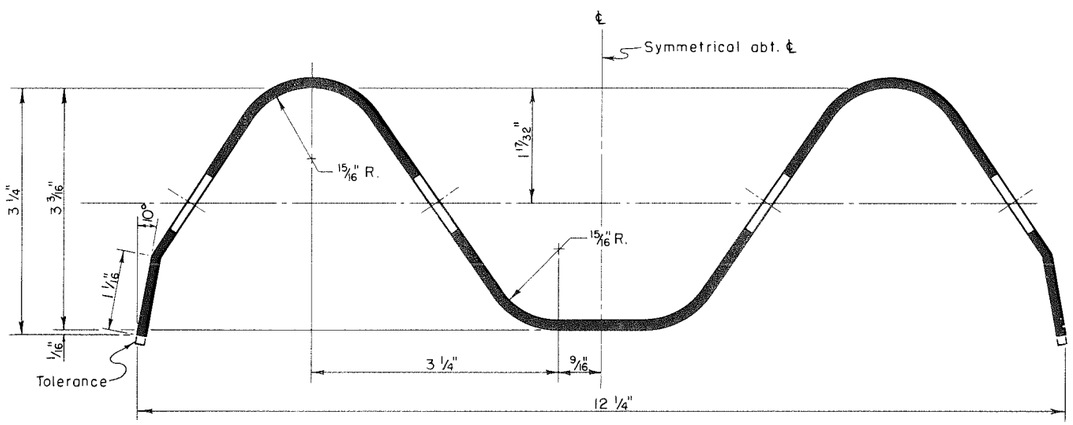

SECTION THRU RAIL ELEMENT

NOTE: All dimensions subject to manufacturing tolerances.

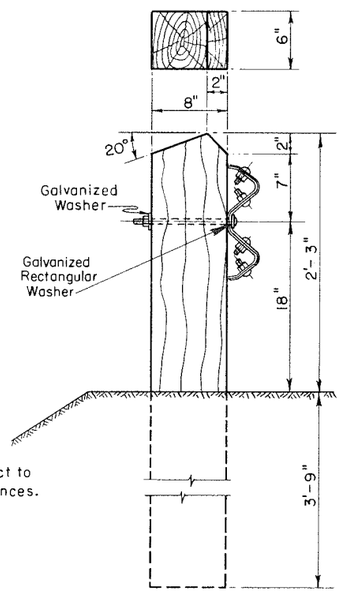

DETAIL AT POST

GENERAL NOTES

All posts shall be made from 6" x 8" seasoned dense Southern Yellow Pine or Douglas Fir of the Coast Region, meeting the A.A.S.H.O. Specifications for Standard Stress Grade, 1600# f.

The posts shall be set vertically to the depth shown on the plans and to the lines and grades staked by the engineer. They shall be maintained in accurate alignment while the post holes are being backfilled with suitable material, thorougly tamped in layers.

The rail element for highway guardrail shall be not less than 12 gage. When used and paid for as Bridge Railing, the rail element shall be not less than 10 gage. The rail element and all hardware shall be galvanized in accordance with the requirements of A.S.T.M. A-93, coating class 2.50, and A.S.T.M. A-153.

All posts shall be treated as provided under "Timber Structures", Section 430 of Specifications F.P. 61, using Pentachlorophenol or Creosote and Creosote Solution. If Pentachlorophenol is used the minimum net retention shall be 0.30 pounds per cubic foot of wood. If Creosote is used the minimum net retention shall be 5 pounds of preservative per cubic foot of wood. After treatment by either method, all posts shall be steam cleaned to produce a dry surface free of oil not retained in the post.

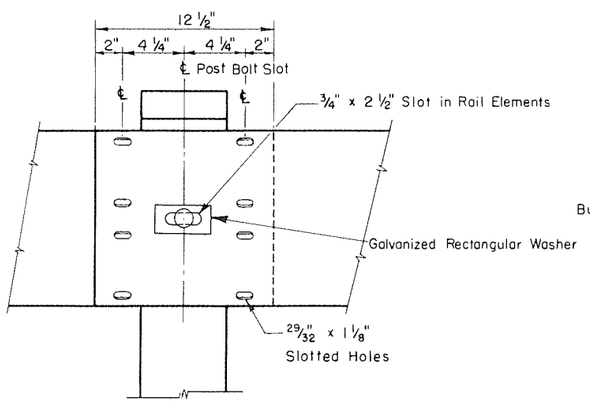

RAIL SPLICE

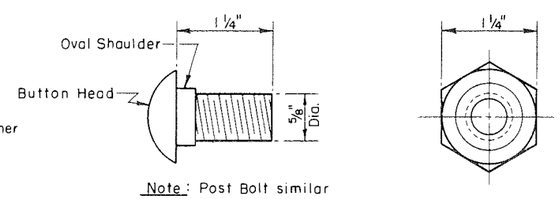

Note: Post Bolt similar except length.

SPLICE BOLT & NUT

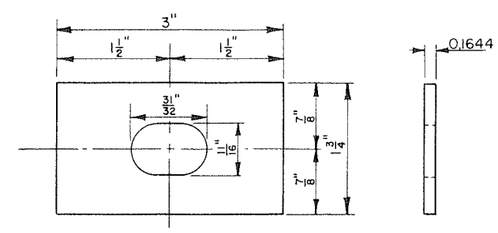

GALVANIZED RECTANGULAR WASHER

Revisions 5/1963, 8/1964, 9/1964

U.S. DEPARTMENT OF COMMERCE
BUREAU OF PUBLIC ROADS
REGION NO. 9 DENVER, COLORADO

STANDARD BEAM-TYPE GUARDRAIL

STD. 151

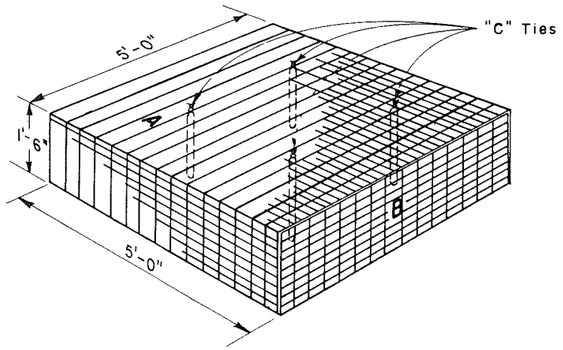

ASSEMBLY

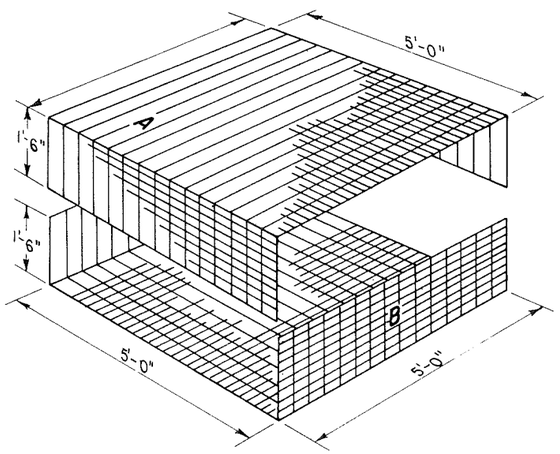

WIRE BASKET DETAIL

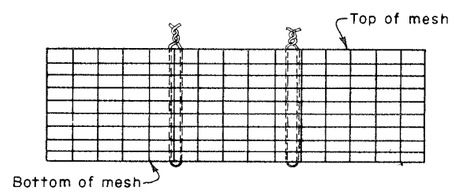

DETAIL OF "C" TIES

Use four ties for each basket

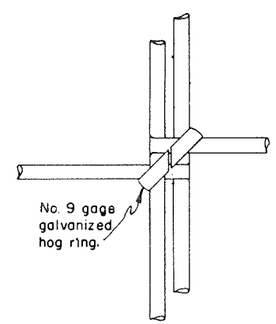

ALTERNATE TIE FOR LAPS OF WIRE MESH

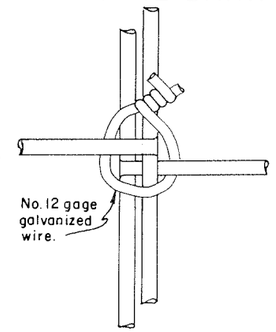

TIE FOR LAPS OF WIRE MESH

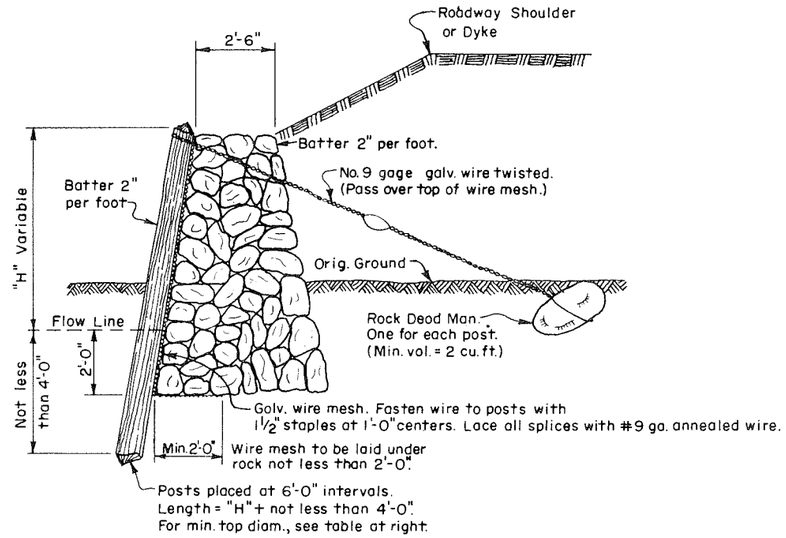

GENERAL NOTES

Woven wire shall be galvanized triangular mesh fabric. Longitudinal wires shall be two-ply cable of No. 12 ½ gage wires at 4" spacing. Cross wires shall be No. 12 ½ gage spaced at 2" intervals. The wire fabric shall be similar to Specification J-3, as manufactured by the Colorado Fuel and Iron Corporation.

POSTS USED FOR BANK PROTECTION SHALL MEET THE FOLLOWING MINIMUM REQUIREMENTS

LENGTH	MIN. TOP DIAMETER
6'-0"	7"
7'-0"	7"
8'-0"	7"
9'-0"	6"
10'-0"	6"
11'-0"	5"
12'-0"	5"

POST, ROCK AND WIRE BANK PROTECTION

GENERAL NOTES

Welded wire fabric shall be fully galvanized and individually welded at every joint. Longitudinal wires shall be No. 12½ gage at 4" spacing. Cross wires shall be No. 12½ gage spaced at 2" intervals.

Adjacent baskets to be tied together where wires are in contact, using two ties for each square foot of contact.

Strips "A" and "B" shall be wired together along the corners of the four sides every 8", and two ties for every square foot of contact of the lapping faces. In addition, place 4 "C" ties from top to bottom of basket as shown.

"C" ties shall be made with No. 9 gage annealed wire. All other ties shall be either No. 12 gage galvanized wire or No. 9 gage galvanized hog rings.

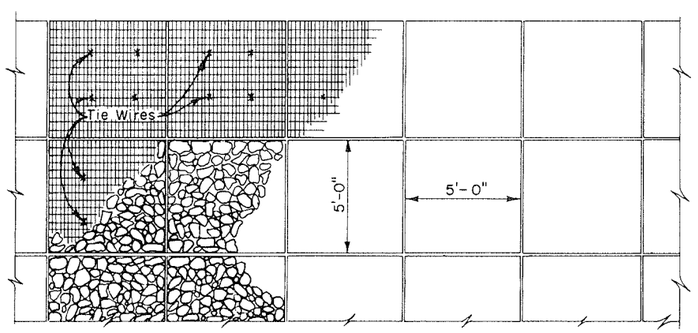

TYPICAL PLAN NORMAL TO SLOPE

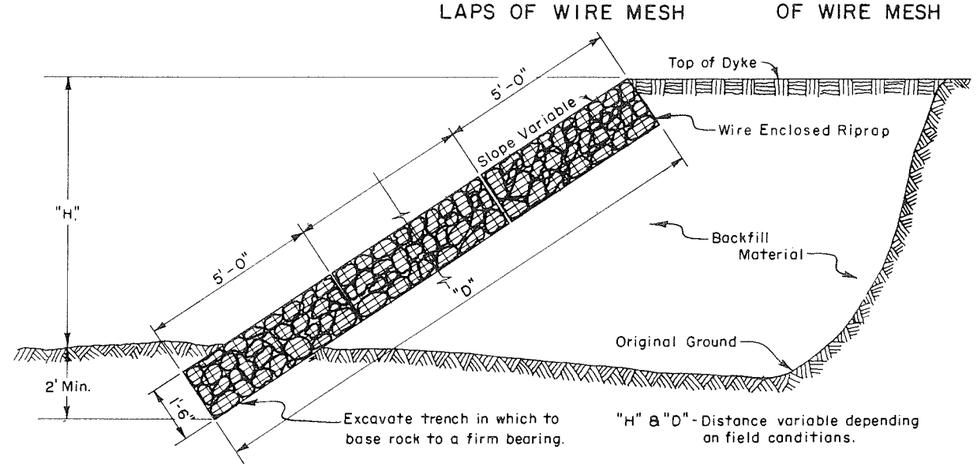

TYPICAL SECTION

WIRE ENCLOSED RIPRAP
USE

Revisions 7/1963, 2/1965

U.S. DEPARTMENT OF COMMERCE
BUREAU OF PUBLIC ROADS
REGION NO. 9 DENVER, COLORADO

STANDARD
WIRE ENCLOSED RIPRAP AND
POST, ROCK AND WIRE
BANK PROTECTION

STD. 154

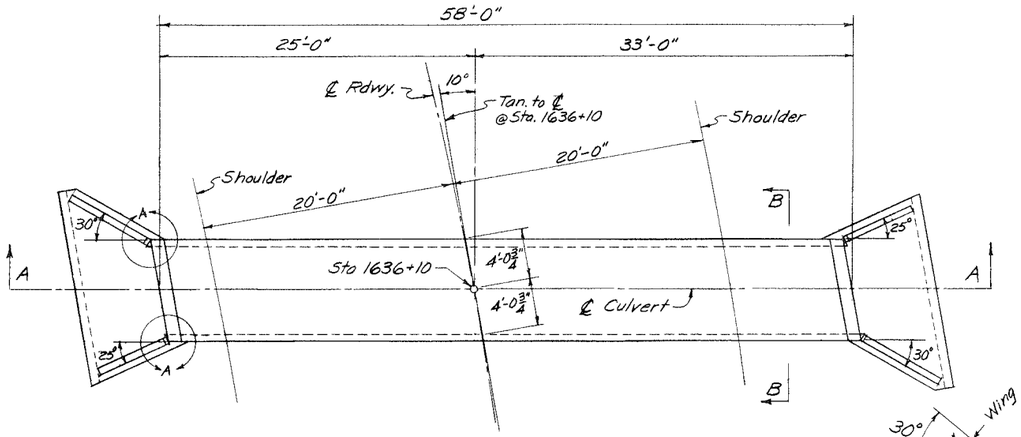

PLAN

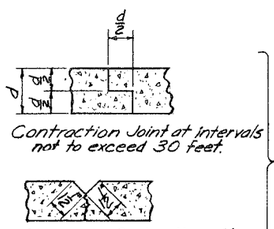

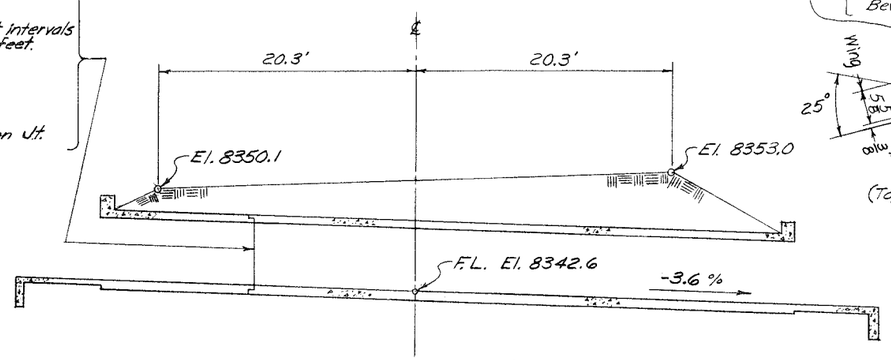

SECTION A-A

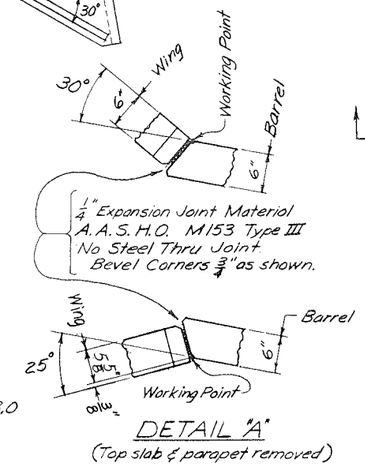

DETAIL "A"
(Top slab & parapet removed)

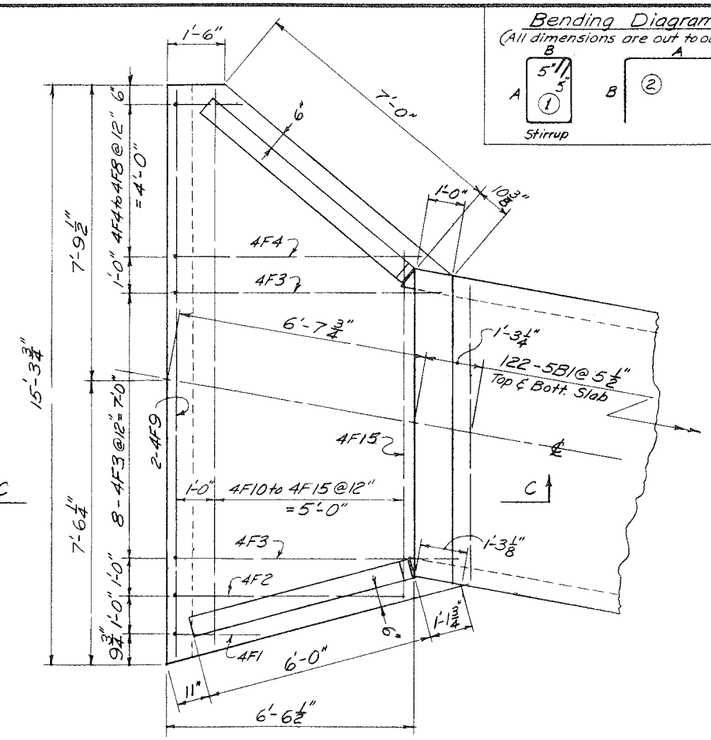

APRON DETAIL

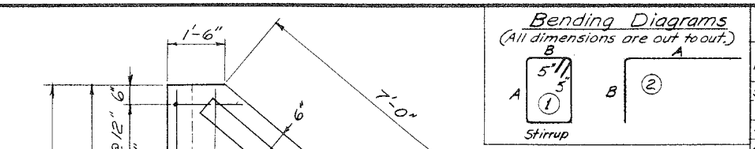

BAR LIST

Mark	Type	Location	Size	No. Req'd	Length Ft.	Length In.	A Ft.	A In.	B Ft.	B In.
5B1	Str.	Barrel	#5	248	7	10	–	–	–	–
4B1	Str.	"	#4	44	29	6	–	–	–	–
4B2	Str.	"	#4	116	6	0	–	–	–	–
4C1	Str.	Parapet	#4	8	7	10	–	–	–	–
4C2	1	"	#4	16	5	1	1	4½	0	9
4K1	Str.	Wing	#4	2	7	3	–	–	–	–
4K2	Str.	"	#4	2	6	3	–	–	–	–
4W1 to 4W8	2	Wing & Apron	#4	2 of Ea.	5 to 7	5 to 10	3 to 5	4 to 9	2 to 2	2 to 2
4W9 to 4W15	2	" "	#4	2 of Ea.	6 to 7	5 to 10	3 to 5	4 to 9	2 to 2	2 to 2
4W16	Str.	Wing	#4	4	6	9	–	–	–	–
4W17	Str.	"	#4	2	4	6	–	–	–	–
4W18	Str.	"	#4	4	5	9	–	–	–	–
4W19	Str.	"	#4	2	3	9	–	–	–	–
4F1	2	Apron & Cutoff Wall	#4	2	4	3	2	2	2	2
4F2	2	" "	#4	2	8	0	5	11	2	2
4F3	2	" "	#4	16	9	3	7	2	2	2
4F4 to 4F8	2	" "	#4	2 of Ea.	8 to 3	7 to 10	6 to 1	6 to 9	2 to 2	2 to 2
4F9	Str.	Apron	#4	4	15	0	–	–	–	–
4F10 to 4F15	Str.	"	#4	2 of Ea.	14 to 9	9 to 3	–	–	–	–

GENERAL NOTES

Specifications: Bureau of Public Roads FP-61, for construction and A.A.S.H.O., 1961 Edition, for design.

Loading: A.A.S.H.O. H20-S16-44.

Design Stresses: f_s = 20,000 psi., f_c = 1200 psi., and n = 10.

Concrete: All concrete shall be Class "A," made with Type II (low alkali) portland cement with an air-entraining admixture. Aprons and cutoff walls shall be placed monolithically with bottom slab. All corners and edges shall be chamfered ¾".

Reinforcement Steel: All bars shall be intermediate grade steel and shall conform to current A.S.T.M. A-15 (Deformed).

Revisions: Any revisions found necessary in the field must be approved by the Bridge Engineer.

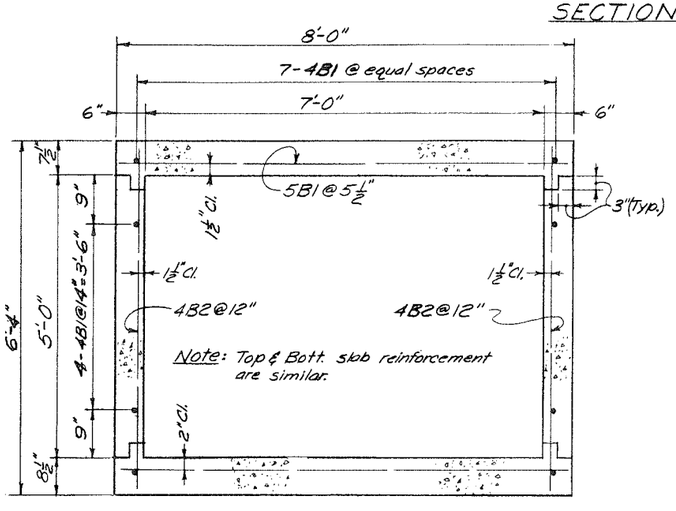

SECTION B-B

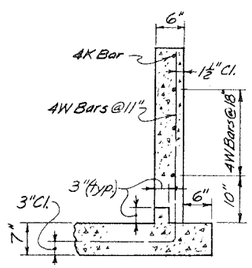

TYPICAL WING SECTION

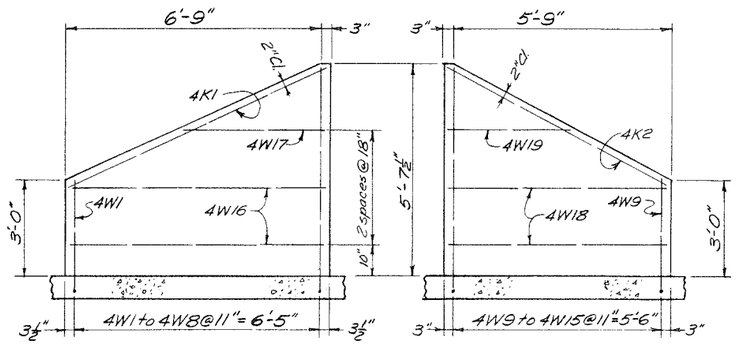

WING WALL DETAILS

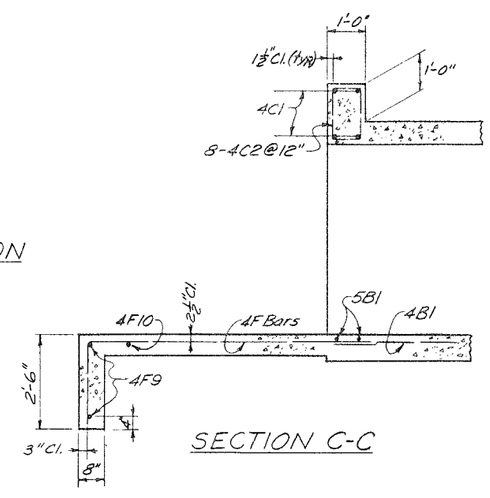

SECTION C-C

Estimated Quantities		
Class A Concrete	41.6	Cu. Yds.
Reinforcement Steel	3940	Lbs.
* Excavation for Structures	30	Cu. Yds.

* Excavation above flow line shall be paid for as Unclassified Excavation.

U.S. DEPARTMENT OF COMMERCE
BUREAU OF PUBLIC ROADS
REGION NO. 9 DENVER, COLORADO

7'-0" x 5'-0" x 58'-0" CONCRETE BOX CULVERT AT Sta. 1636+10

Project: F.H. 1-2(3). Dolores-Rico.
Forest: San Juan National Forest.
State: Colorado.

APPROVED: King Burghardt DATE: 1-13-65
REGIONAL BRIDGE ENGINEER

Revisions

R9B-104

23

Note: Existing longitudinal barrel reinforcement shall be cleaned and used to dowel C.B.C. extension to existing C.B.C.

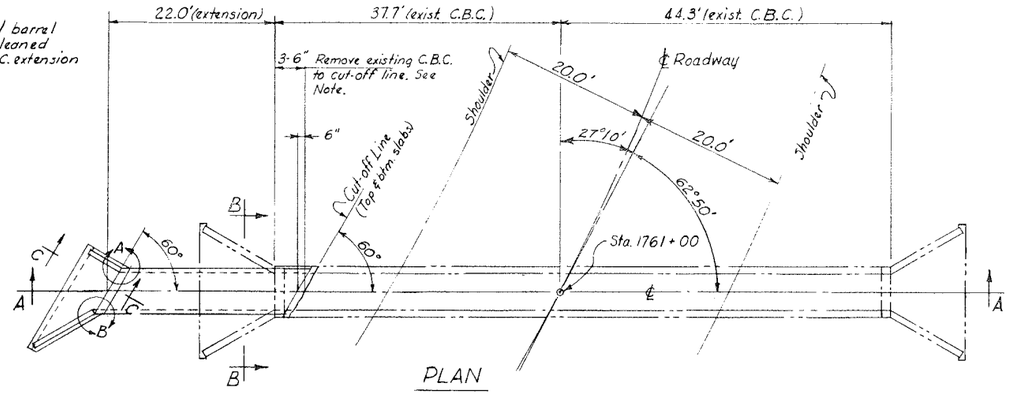

PLAN

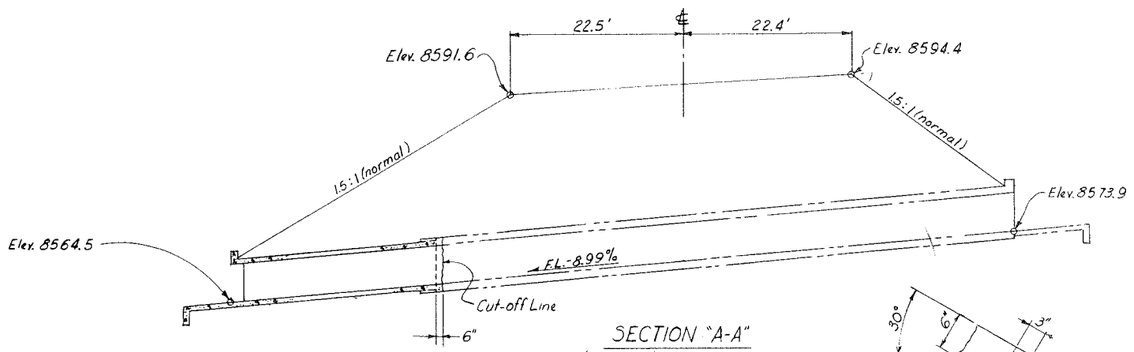

SECTION "A-A"
(Wing Walls not shown)

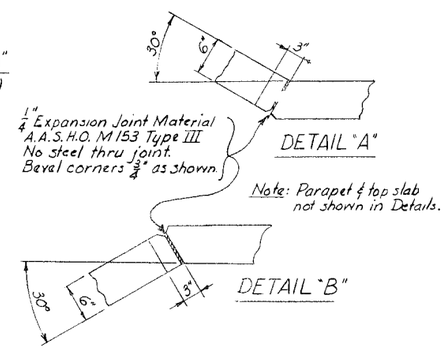

DETAIL "A"

DETAIL "B"

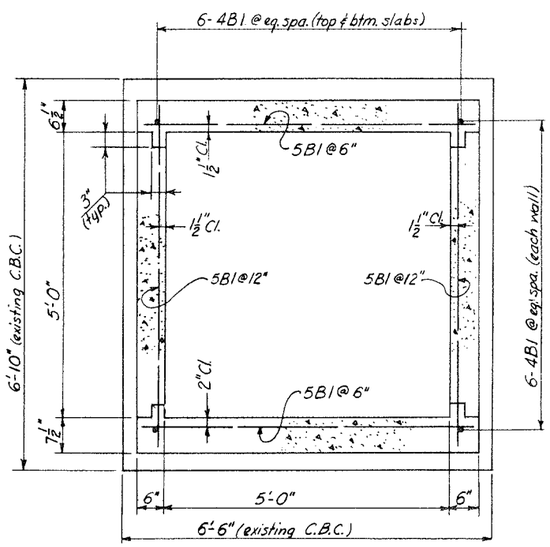

SECTION "B-B"

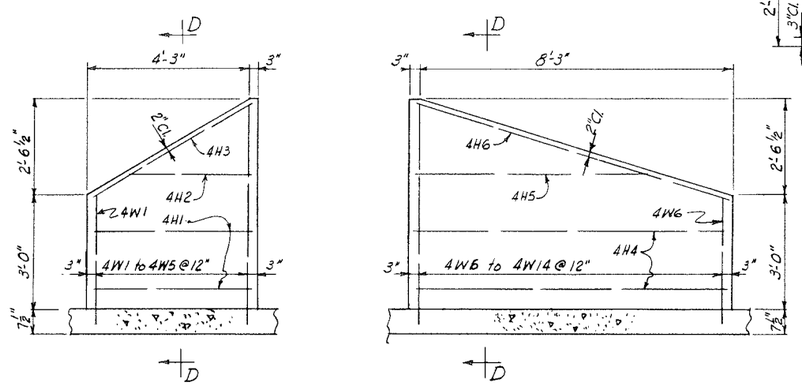

WING WALL DETAILS

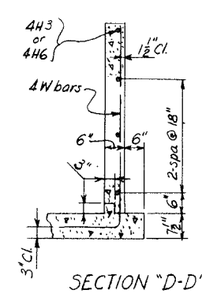

SECTION "D-D"

BENDING DIAGRAMS:
(all dimensions are out to out)

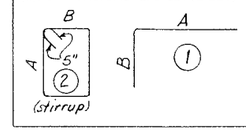

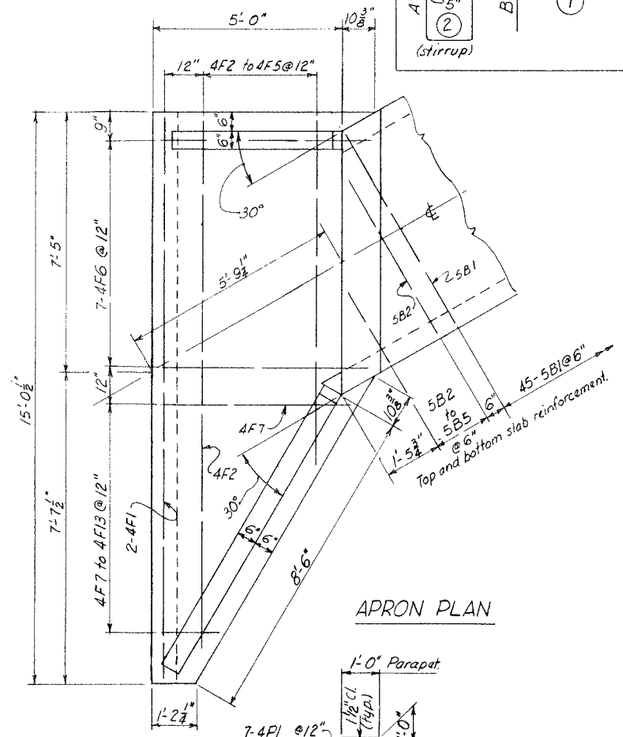

APRON PLAN

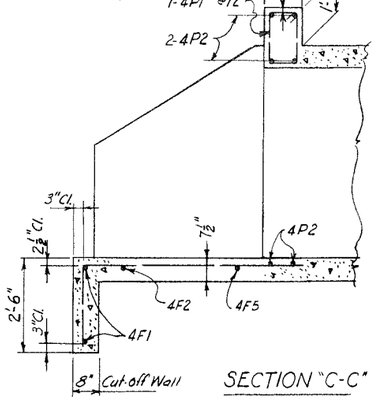

SECTION "C-C"

BILL OF REINFORCEMENT

Mk	Type	Location	Size	Nº Reqd.	Length Ft.	Length In.	A Ft.	A In.	B Ft.	B In.
5B1	Str.	Barrel	#5	90	5	9	-	-	-	-
5B2				4	4	6	-	-	-	-
to	Str	Barrel	#5	of	to					
5B5				each	2	0	-	-	-	-
4B1	Str	Barrel	#4	20	25	3	-	-	-	-
4F1	Str	Apron	#4	2	14	9	-	-	-	-
4F2				1	14	3	-	-	-	-
to	Str	Apron	#4	of	to					
4F5				each	9	3	-	-	-	-
4F6	1	Apron	#4	7	7	9	5	8	2	2
4F7				1	6	9	4	8	2	2
to	1	Apron	#4	of	to		to		to	
4F13				each	3	6	1	5	2	2
4P1	2	Parapet	#4	7	4	11	1	3½	0	9
4P2	Str.	" & btm. slab	#4	6	6	8	-	-	-	-
4H1	Str	Short Wing Wall	#4	2	4	3	-	-	-	-
4H2	Str	Short Wing Wall	#4	1	3	3	-	-	-	-
4H3	Str.	Short Wing Wall	#4	1	5	0	-	-	-	-
4H4	Str	Long Wing Wall	#4	2	8	3	-	-	-	-
4H5	Str.	Long Wing Wall	#4	1	6	3	-	-	-	-
4H6	Str	Long Wing Wall	#4	1	8	7	-	-	-	-
4W1				1	5	6	3	5	2	2
to	1	Short Wing Wall	#4	of	to		to		to	
4W5				each	7	9	5	8	2	2
4W6				1	5	6	3	5	2	2
to	1	Long Wing Wall	#4	of	to		to		to	
4W14				each	7	9	5	8	2	2

GENERAL NOTES

SPECIFICATIONS: Bureau of Public Roads, F.P.-61.

LOADING: A.A.S.H.O. H20-S16-44.

DESIGN STRESSES: f_s = 20 000 p.s.i., f_c = 1200 p.s.i., n = 10.

CONCRETE: All concrete shall be Class A made with Type II (low alkali) portland cement with an air-entraining admixture. Apron and cut-off wall shall be poured monolithically with bottom slab. All corners and edges shall be chamfered ¾".

REINFORCEMENT STEEL: All bars shall be intermediate grade steel as per current A.S.T.M. A-15 (Deformed).

REVISIONS: Any revisions found necessary in the field must be approved by The Bridge Engineer.

ESTIMATED QUANTITIES

Class A Concrete	15.0	Cu. Yd.
Reinforcement Steel	1190	Lbs.
* Excavation for Structures	10	Cu. Yd
Removing Existing Structures	Force Account	

* Excavation above flow line shall be paid for as Unclassified Excavation.

U.S. DEPARTMENT OF COMMERCE
BUREAU OF PUBLIC ROADS
REGION NO. 9 DENVER, COLORADO

5'-0" × 5'-0" × 22'-0" EXTENSION TO EXISTING CONCRETE BOX CULVERT STATION 1761 + 00

PROJECT: FH 1-2(3), Dolores - Rico
FOREST: San Juan National Forest
STATE: Colorado

APPROVED: Irving Berghardt DATE: 1-13-65
REGIONAL BRIDGE ENGINEER

Revisions

R9B - 107

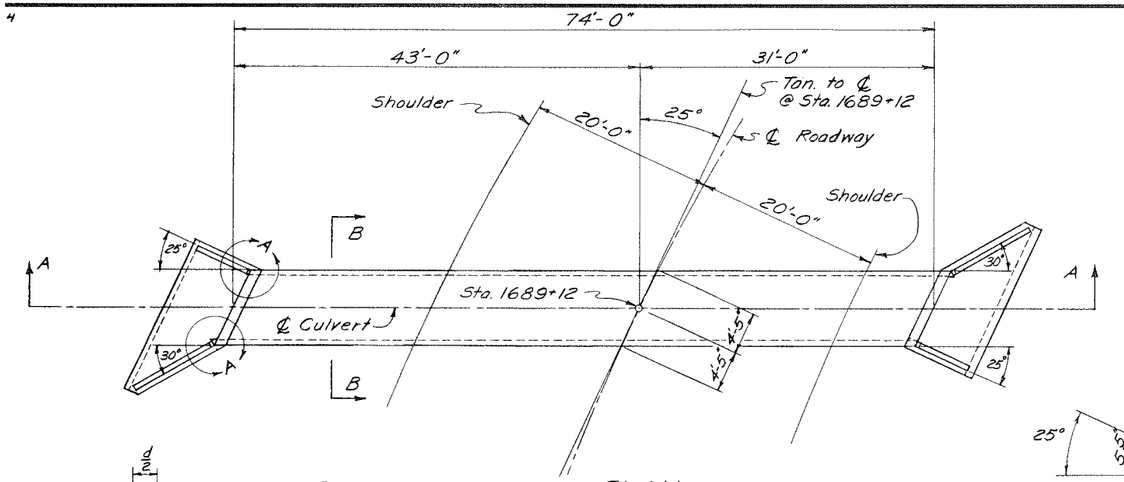

PLAN

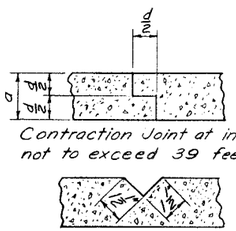

Contraction Joint at intervals not to exceed 39 feet.

Alternate Contraction Joint.

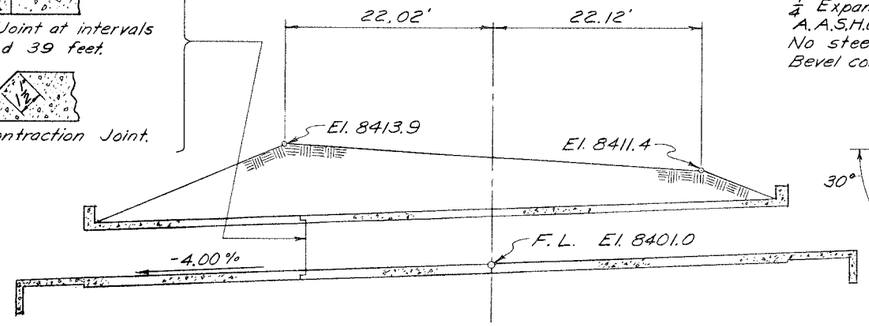

SECTION A-A

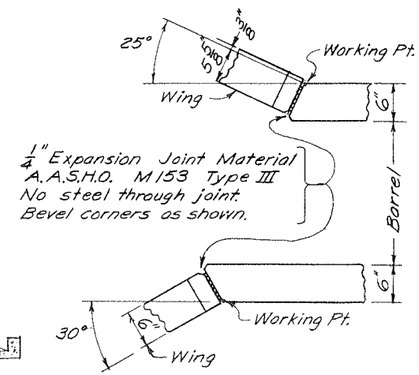

DETAIL "A"

(Top slab and parapet removed.)

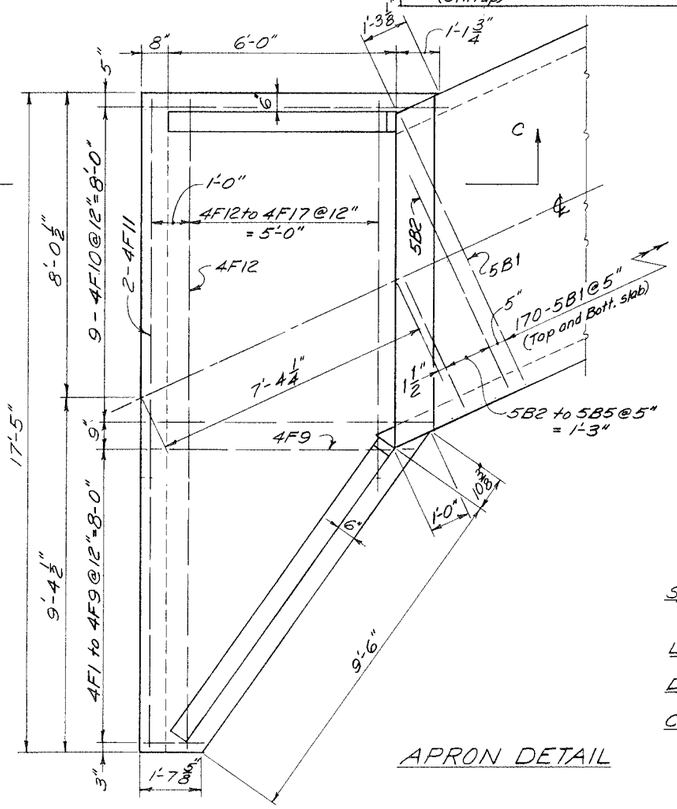

APRON DETAIL

BENDING DIAGRAMS

(All dimensions are out to out.)

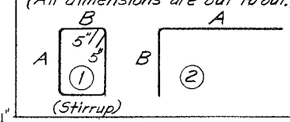

BAR LIST

Mark	Type	Location	Size	No. Reqd.	Length ft.	Length in.	A ft.	A in.	B ft.	B in.
5B1	Str.	Barrel	#5	340	7	9	–	–	–	–
5B2 to 5B5	Str.	Barrel	#5	4 of Ea.	6 to 3	0 to 0	–	–	–	–
4C1	Str.	Parapet & Bott. Slab	#4	12	8	7	–	–	–	–
4C2	1	Parapet	#4	18	5	1	1	4 1/2	0	9
4K1	Str.	Short Wing	#4	2	6	5	–	–	–	–
4K2	Str.	Long Wing	#4	2	9	8	–	–	–	–
4W1 to 4W7	2	Wing & Apron	#4	2 of Ea.	4 to 7	11 to 11	2 to 5	10 to 10	2 to 2	2 to 2
4W8 to 4W18	2	Wing & Apron	#4	2 of Ea.	4 to 7	9 to 11	2 to 5	8 to 10	2 to 2	2 to 2
4W19	Str.	Short Wing	#4	4	5	9	–	–	–	–
4W20	Str.	Short Wing	#4	2	3	0	–	–	–	–
4W21	Str.	Long Wing	#4	4	9	3	–	–	–	–
4W22	Str.	Long Wing	#4	2	5	0	–	–	–	–
4F1 to 4F9	2	Apron	#4	2 of Ea.	3 to 8	4 to 11	1 to 6	3 to 10	2 to 2	2 to 2
4F10	2	Apron	#4	18	9	6	7	5	2	2
4F11	Str.	Apron	#4	4	17	2	–	–	–	–
4F12 to 4F17	Str.	Apron	#4	2 of Ea.	17 to 10	2 to 3	–	–	–	–
4B1	Str.	Barrel	#4	44	37	6	–	–	–	–
4B2	Str.	Barrel	#4	178	6	1	–	–	–	–

GENERAL NOTES

Specifications: Bureau of Public Roads FP-61, for construction and A.A.S.H.O., 1961 Edition, for design.

Loading: A.A.S.H.O. HS20-44.

Design Stresses: $f_s = 20{,}000$ psi, $f_c = 1200$ psi, and $n = 10$.

Concrete: All concrete shall be Class "A", made with Type II (low alkali) portland cement made with an air-entraining admixture. Aprons and cutoff walls shall be placed monolithically with bottom slab. All corners and edges shall be chamfered $\frac{3}{4}$".

Reinforcement Steel: All bars shall be intermediate grade steel and shall conform to current A.S.T.M. specification A 15 (Deformed)

Revisions: Any revisions found necessary in the field shall be approved by the Bridge Engineer.

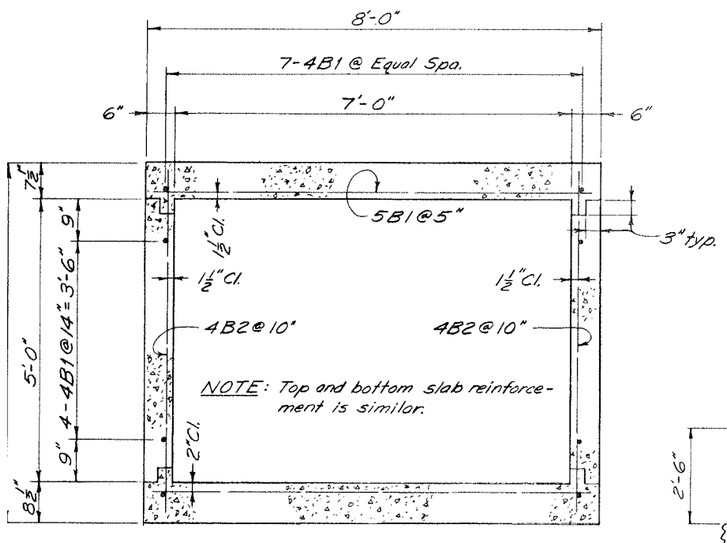

NOTE: Top and bottom slab reinforcement is similar.

SECTION B-B

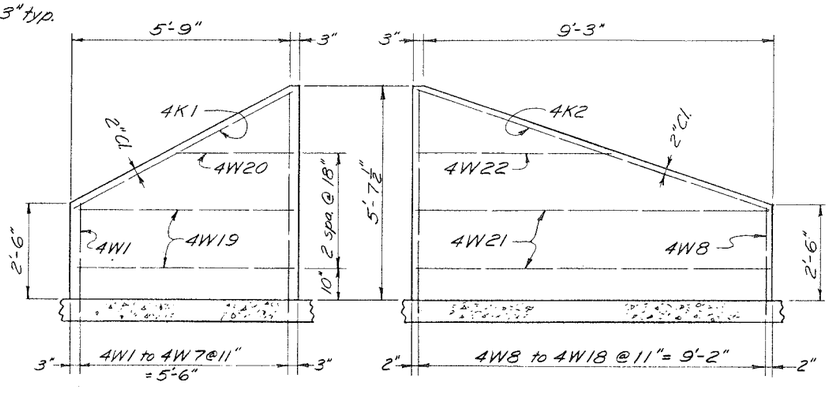

WING WALL DETAILS

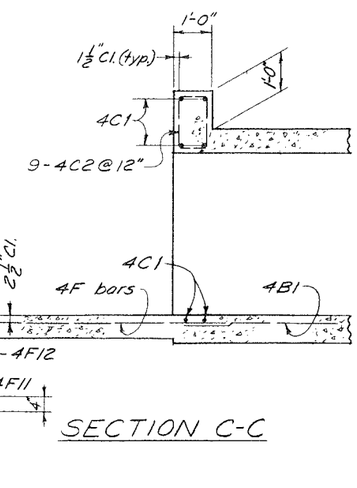

SECTION C-C

ESTIMATED QUANTITES		
Class "A" Concrete	50.6	Cu. Yds.
Reinforcement Steel	5350	Lbs.
* Excavation for Structures	35	Cu. Yds.

* Excavation above flow line shall be paid for as Unclassified Excavation.

U.S. DEPARTMENT OF COMMERCE
BUREAU OF PUBLIC ROADS
REGION NO. 9 DENVER, COLORADO

7'-0" x 5'-0" x 74'-0"

CONCRETE BOX CULVERT AT STA. 1689+12

Project: F.H. 1-2(3). Dolores-Rico.
Forest: San Juan National Forest.
State: Colorado.

APPROVED: King Berghardt DATE: 12-8-64
REGIONAL BRIDGE ENGINEER

Revisions

R9B-122

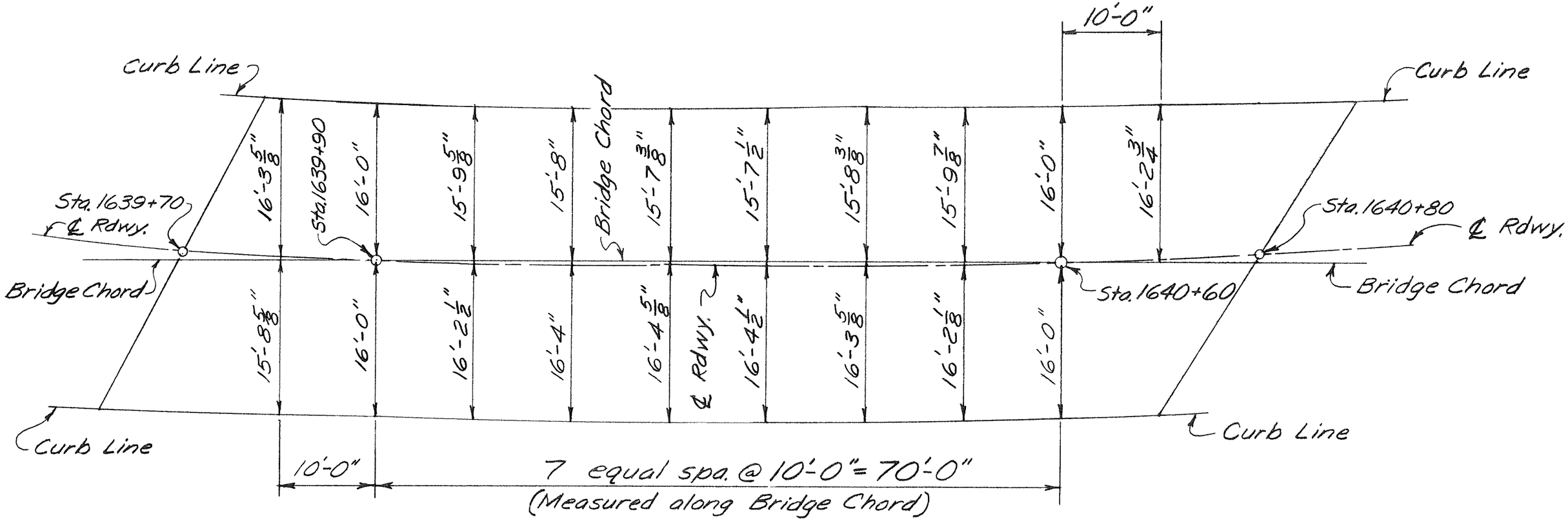

Perpendicular Distances From Bridge Chord to Curb Lines

Note: Curb Lines are 16'-0" from ℄ Roadway measured radially.

Dolores River Bridge
Sta. 1640+25

Project: F.H. 1-2(3), Dolores-Rico
Forest: San Juan Nat'l. Forest
State: Colorado

R9B-133

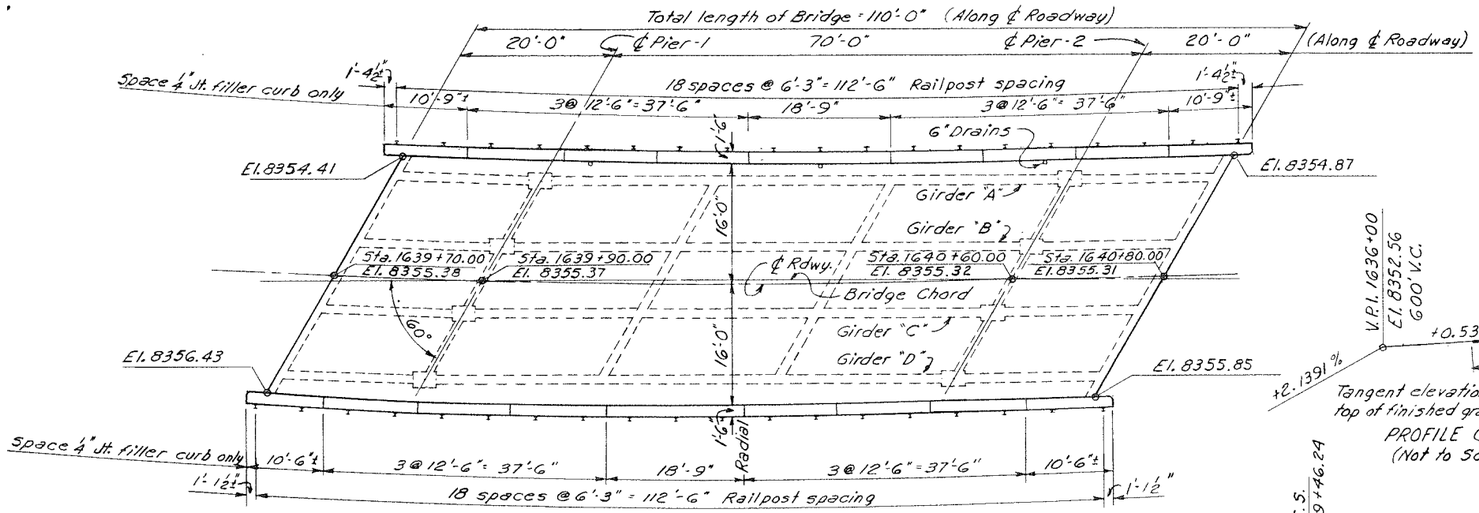

PLAN

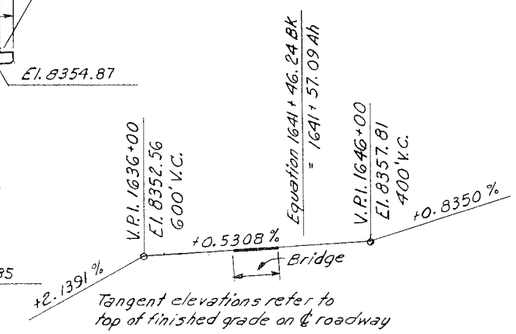

Tangent elevations refer to top of finished grade on ℄ roadway

PROFILE GRADE
(Not to Scale)

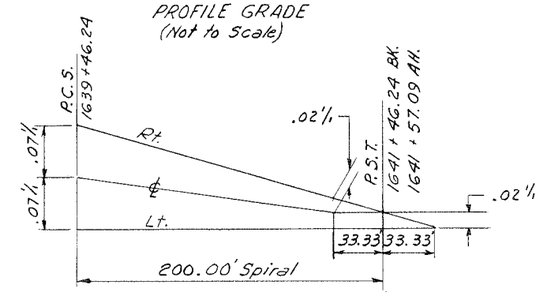

SUPERELEVATION DIAGRAM
(Not to Scale)

Crown slope is -.02'/' from ℄. For super elevation, rotation is about a point 20' Left of ℄.

GENERAL NOTES

SPECIFICATIONS: Construction, Bureau of Public Roads FP61; Design AASHO Standard Specifications for Highway Bridges, 1961, and the adopted "Interim Specifications."

DEAD LOAD: Concrete, 150 lbs. per cu. ft. paving allowance, 25 lbs. per sq. ft. of roadway surface.

LIVE LOAD: HS 20-44 Loading. Impact $I = \frac{50}{L+125}$ (L = Span length) Max. I = 30%

UNIT STRESSES: f_c = 1320 p.s.i., f_s = 20,000 p.s.i., n = 10.

CONCRETE: All concrete shall be Class "A". The maximum size of coarse aggregate shall be 1½". All concrete shall be mixed with Type II Portland Cement (low alkali) and with an air entraining admixture. All concrete shall be vibrated. Exposed corners shall be chamfered ¾" unless otherwise noted.

FINISHING CONCRETE: The roadway slab and curbs shall be finished according to specifications. The following surfaces shall be given a "rubbed finish": both vertical faces of the curbs; outside edges of the slab; outside faces of the exterior girders; and the exposed faces of the end wings down to one foot below finished ground.

REINFORCEMENT STEEL: All reinforcement bars shall be intermediate grade steel, and shall conform to A.S.T.M. Specifications A15 and A305 for sizes up to and including #11 bars and to A.S.T.M. Specification A408 for larger size bars. Unless otherwise shown the minimum covering for reinforcement shall be 2".

STEEL BRIDGE RAILING: All items of rail construction are included in the contract item for "Steel Bridge Railing" and includes the beam type steel railing; steel posts, and all rail and post securing bolts, nuts, washers and shims. All items of rail construction shall be galvanized. The pay length for the steel bridge railing shall be measured center to center of end posts.

RIPRAP: See Standard Drawing 154 and "Special Provisions."

ESTIMATE

Excavation for structures (Bridges)	350 Cu. Yds.
Class "A" Concrete	268 Cu. Yds.
* Reinforcement Steel	83,700 Lbs.
Steel Bridge Railing	225 Lin. Ft.
Wire Enclosed Riprap	400 Sq. Yds.

* Includes weight of guard angles and drains.

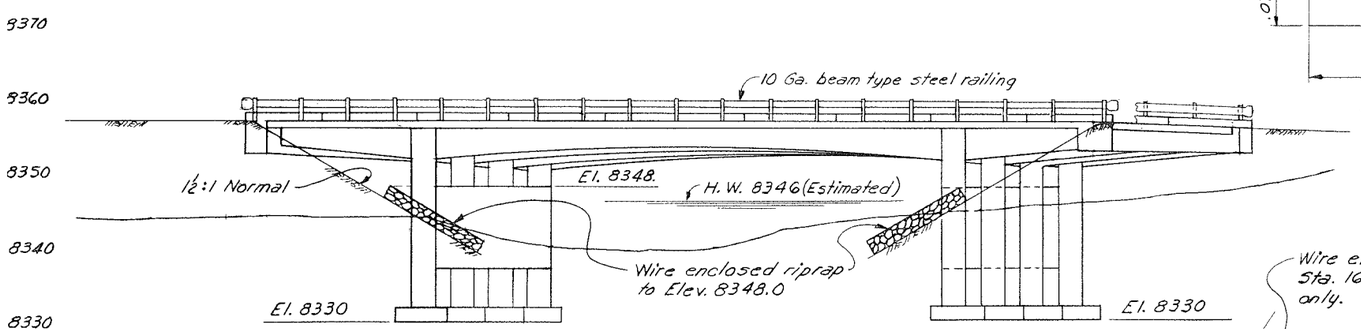

ELEVATION

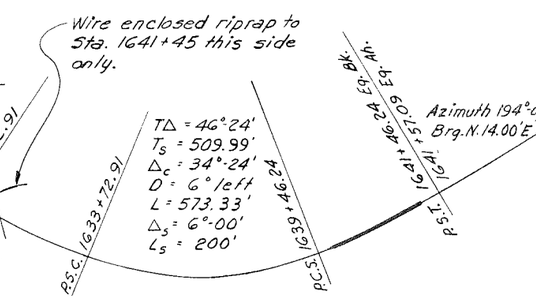

HORIZONTAL CURVE DATA
(Not to Scale)

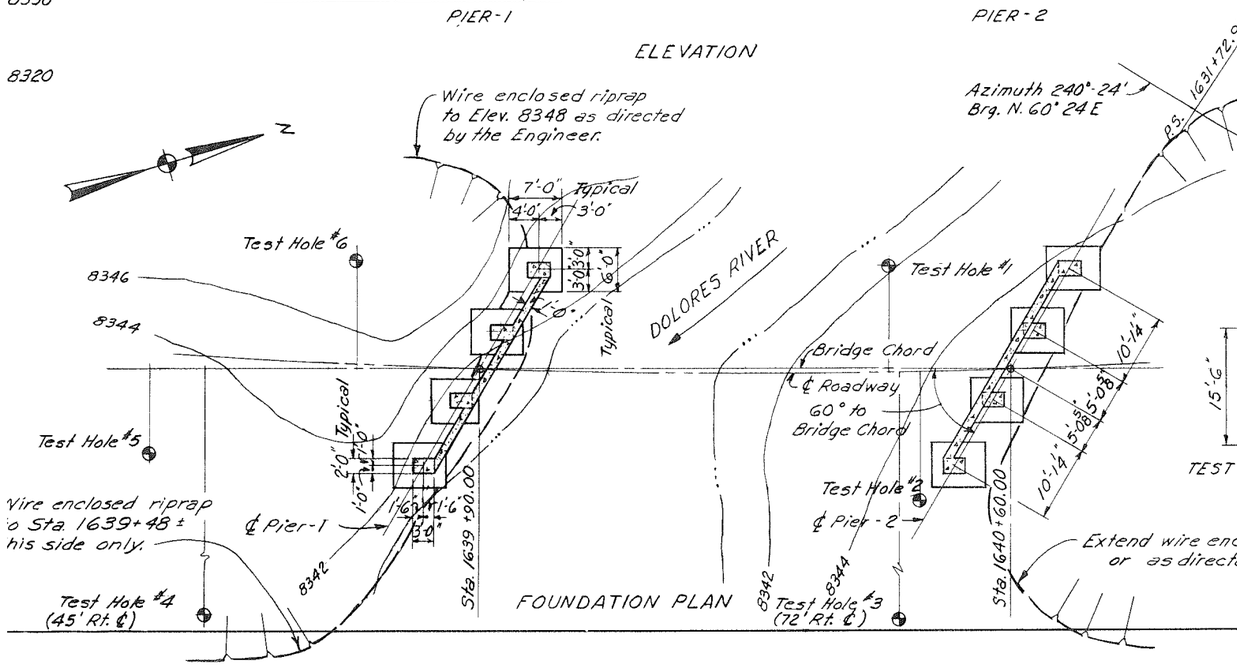

FOUNDATION PLAN

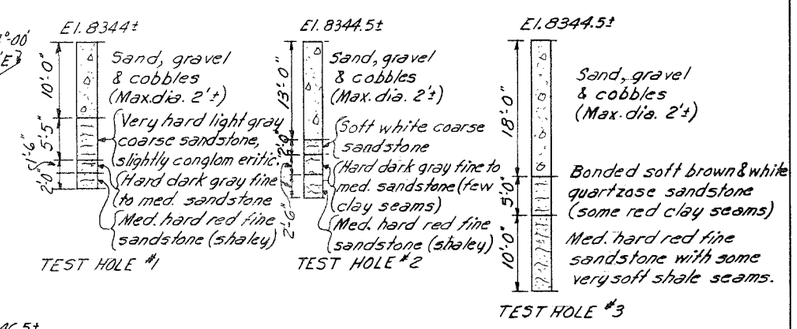

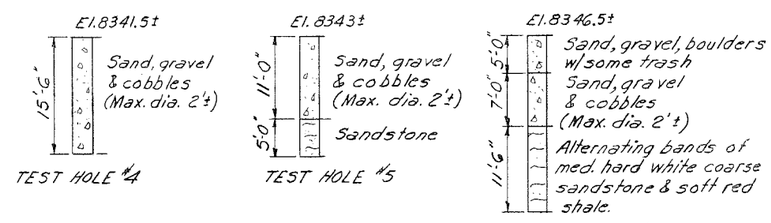

TEST HOLE BORINGS
Not to Scale

Note: Any subsurface data represented in the stratigraph is limited to the specific locations shown.

DEPARTMENT OF COMMERCE
BUREAU OF PUBLIC ROADS REGION 7 SAN FRANCISCO, CALIFORNIA

DOLORES RIVER BRIDGE

STA. 1640 + 25

COLORADO FOREST HIGHWAY PROJECT I-2(3)

APPROVED D. M. Goodall
CHIEF, WESTERN BRIDGE DESIGN

SCALE: 1" = 10'-0" & AS NOTED AUG. 1964

BRIDGE DRWG. 1 OF 5 DRWGS.

RG 1723-A

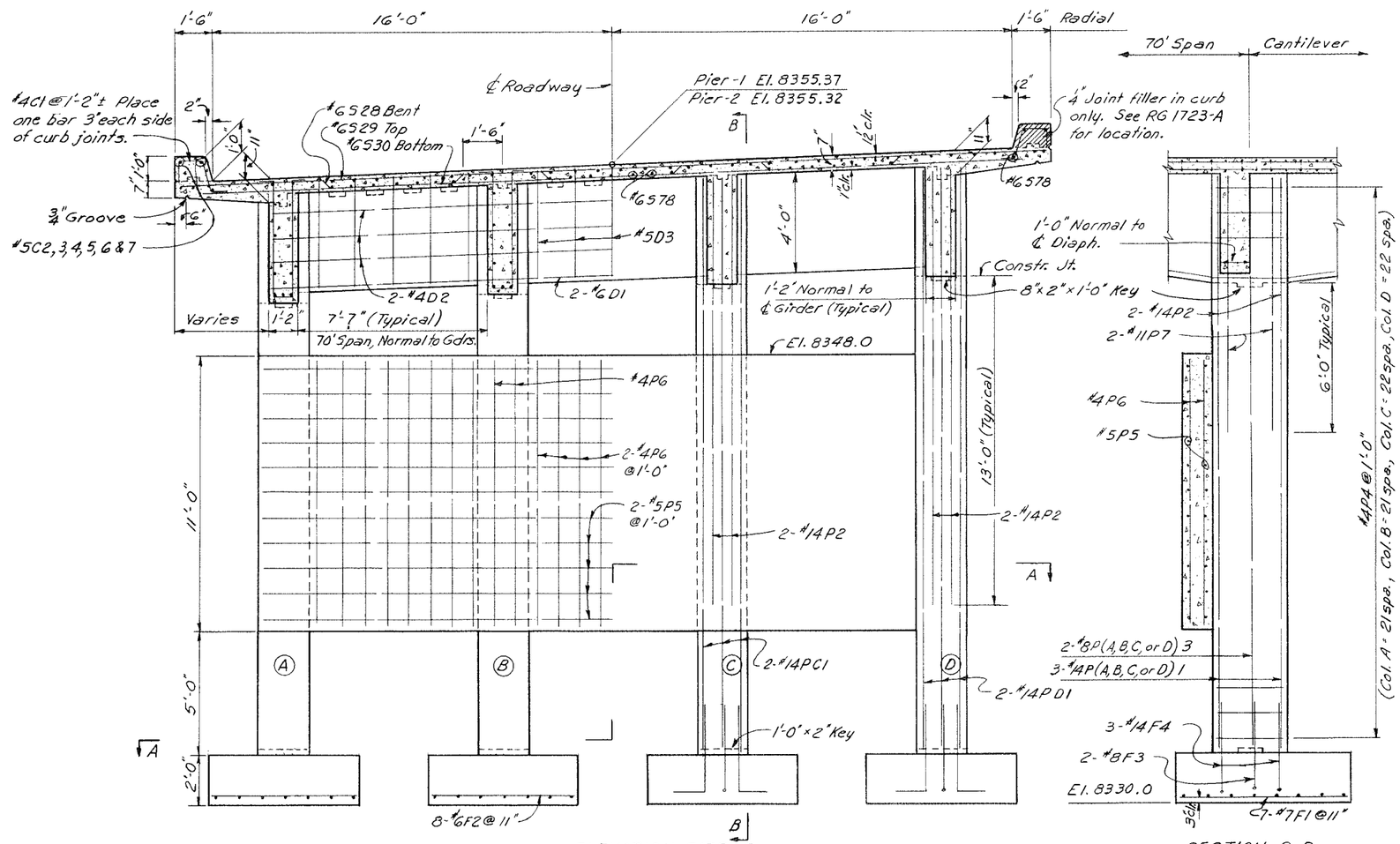

ELEVATION PIER-2

SECTION B-B

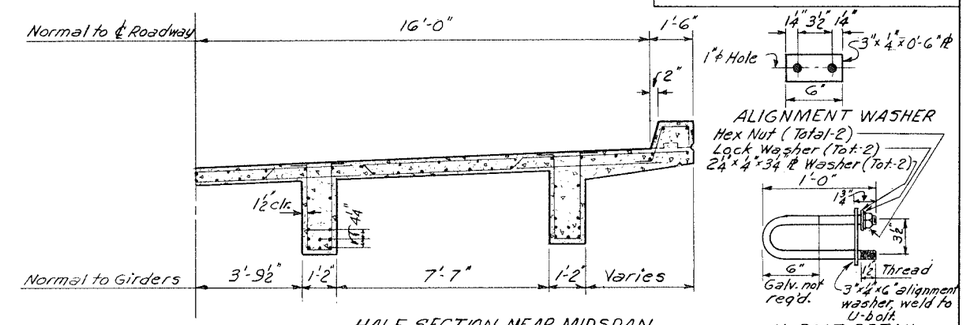

HALF SECTION NEAR MIDSPAN
Scale: 3/4" = 1'-0"

U-BOLT DETAIL
Scale: 1/2" = 1'-0"

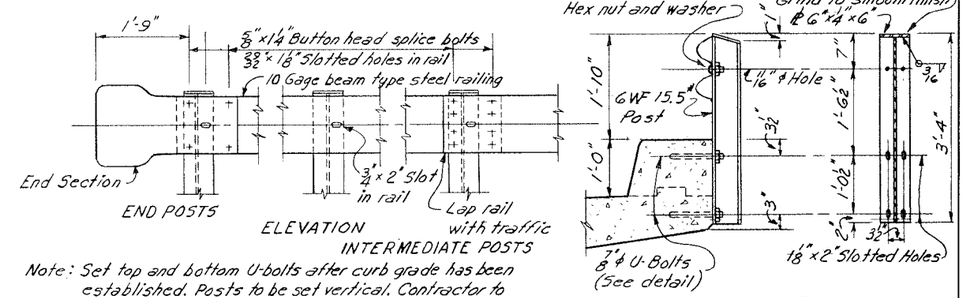

Note: Set top and bottom U-bolts after curb grade has been established. Posts to be set vertical. Contractor to provide suitable metal shims to align posts. All items of rail construction shall be galvanized after fabrication.

STANDARD RAILING DETAILS
Scale: 3/4" = 1'-0"
For details of deep beam rail see Std. Dwg. 151.

RAIL POST DETAIL
Scale: 3/4" = 1'-0"

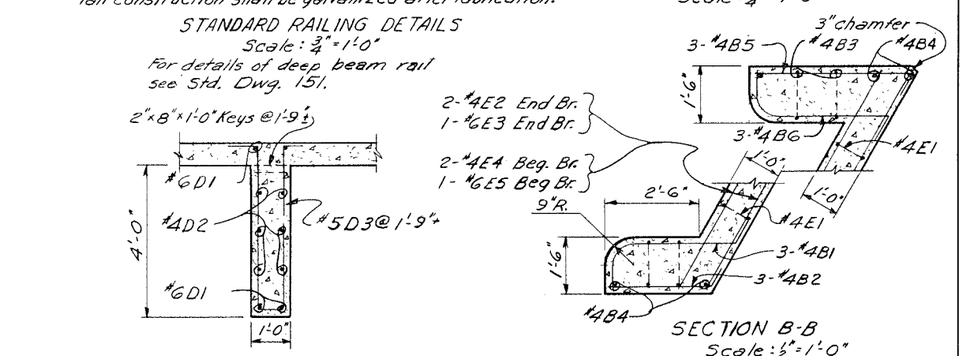

TYP. DIAPH. AT PIERS
Scale: 1/2" = 1'-0"

SECTION B-B
Scale: 1/2" = 1'-0"

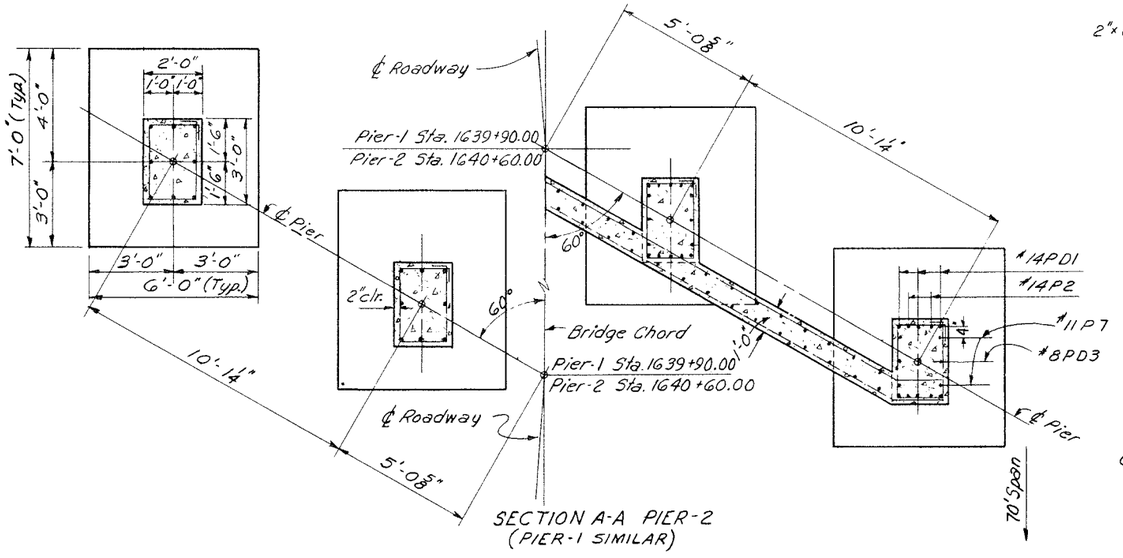

SECTION A-A PIER-2
(PIER-1 SIMILAR)

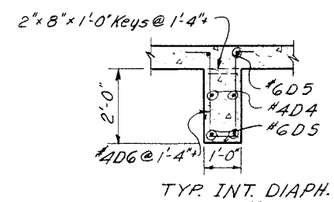

TYP. INT. DIAPH.
Scale: 1/2" = 1'-0"

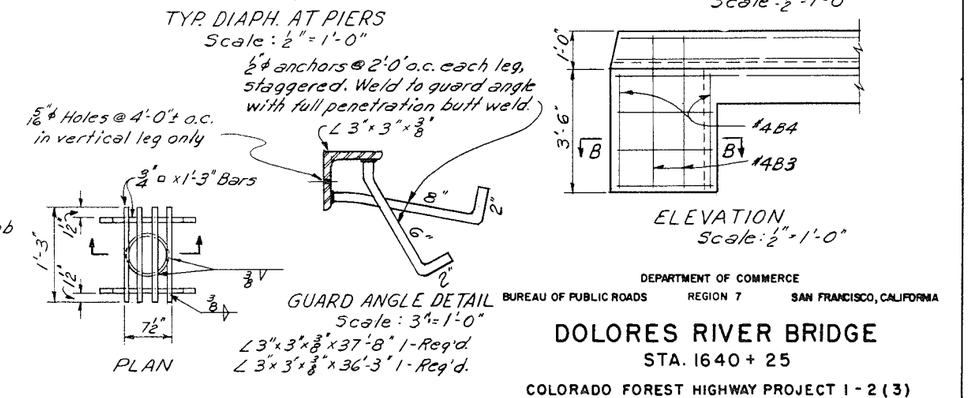

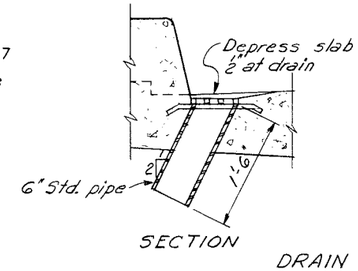

SECTION

DRAIN DETAILS (3-Required)
Scale: 1" = 1'-0"

DEPARTMENT OF COMMERCE
BUREAU OF PUBLIC ROADS REGION 7 SAN FRANCISCO, CALIFORNIA

DOLORES RIVER BRIDGE

STA. 1640 + 25

COLORADO FOREST HIGHWAY PROJECT I-2(3)

SCALE: 3/8" = 1'-0" UNLESS NOTED AUG. 1964

BRIDGE DRWG. 2 OF 5 DRWGS.

RG 1723-B

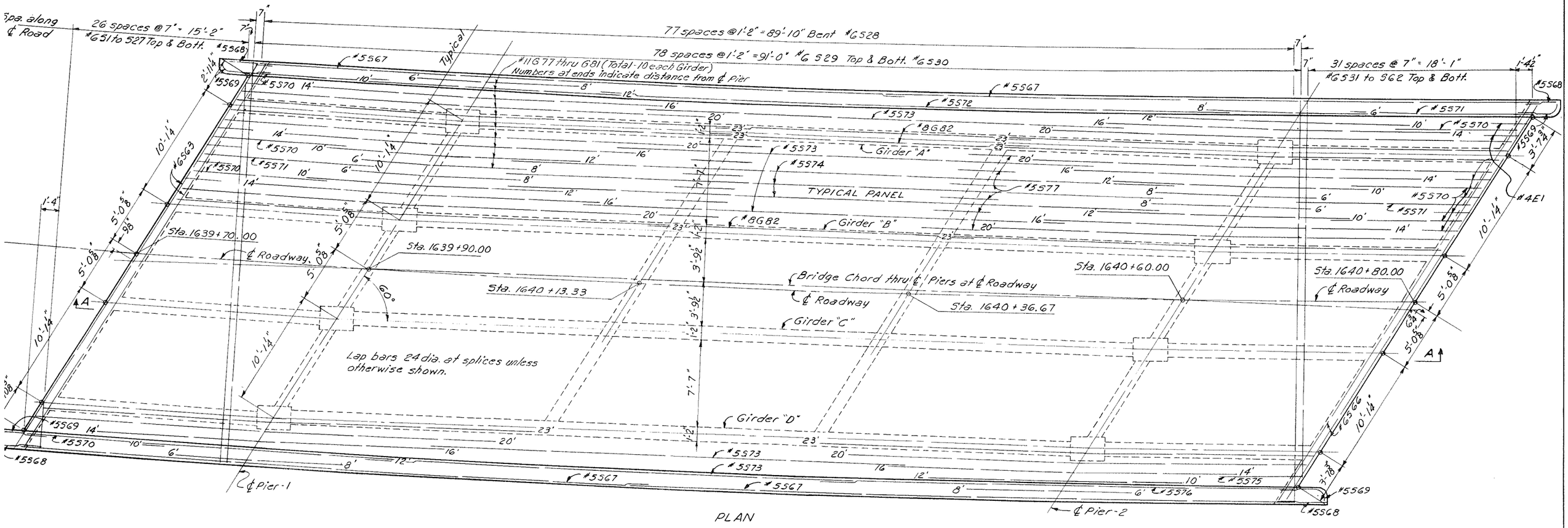

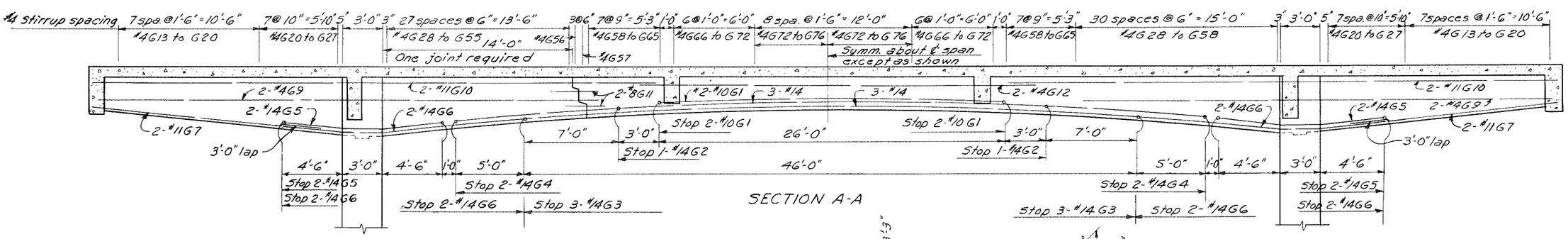

TABLE OF SOFFIT ELEVATIONS						
	POINT					
GIRDER	1	2	3	4	5	6
A	8351.33	8349.63	8349.64	8349.88	8349.89	8351.70
B	8351.86	8350.12	8350.12	8350.17	8350.17	8351.94
C	8352.40	8350.62	8350.61	8350.48	8350.47	8352.19
D	8352.99	8351.16	8351.15	8350.82	8350.81	8352.48

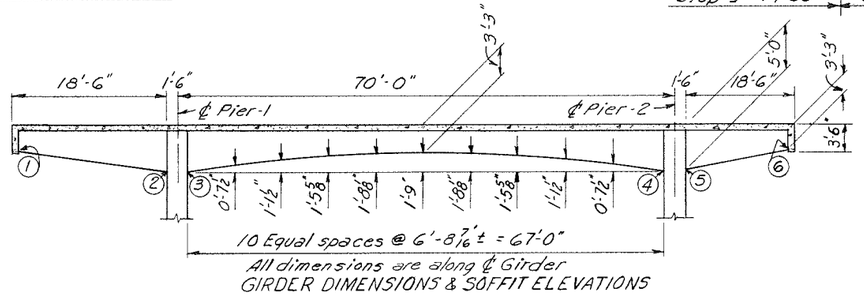

All dimensions are along ℄ Girder
GIRDER DIMENSIONS & SOFFIT ELEVATIONS
Not to Scale

DEPARTMENT OF COMMERCE
BUREAU OF PUBLIC ROADS REGION 7 SAN FRANCISCO, CALIFORNIA

DOLORES RIVER BRIDGE

STA. 1640 + 25

COLORADO FOREST HIGHWAY PROJECT I-2(3)

SCALE: 1/4" = 1'-0" UNLESS NOTED AUG. 1964

BRIDGE DRWG. 3 OF 5 DRWGS.

RG1723-C

LOCATION	STRAIGHT BARS MARK	NO.	SIZE	LENGTH	BENT BARS MARK	NO.	SIZE	LENGTH
Pier Footings	F1	56	7	6'-8"				
" "	F2	64	6	5'-8"				
" "					F3	16	8	5'-4½"
" "					F4	48	14	8'-6"
ers Col. (A) Vert.	PA1	12	14	21'-9"				
" " (B) "	PB1	12	14	22'-3"				
" (C) "	PC1	12	14	22'-6"				
" (D) "	PD1	12	14	23'-0"				
Pier Columns	P2	32	14	17'-0"				
ers Col. (A) Vert.	PA3	4	8	21'-9"				
" " (B) "	PB3	4	8	22'-3"				
" " (C) "	PC3	4	8	22'-6"				
" " (D) "	PD3	4	8	23'-0"				
" " Hoops					P4	180	4	9'-11"
" Web Wall					P5	44	5	33'-4"
" " "	P6	108	4	10'-8"				
Pier Columns	P7	32	11	10'-0"				
Pier Diaphragms	D1	8	6	32'-0"				
" "	D2	12	4	32'-0"				
" "					D3	30	5	10'-9"
Interior "	D4	4	4	31'-0"				
" "	D5	8	6	31'-0"				
" "					D6	42	4	6'-6"
End Beams					E1	32	4	10'-10"
d Beam 1639+70	E2	4	4	38'-7"				
" " 1639+70	E3	2	6	38'-7"				
" " 1640+80	E4	4	4	40'-0"				
" " 1640+80	E5	2	6	40'-0"				
End Brackets					B1	6	4	5'-2"
" "					B2	6	4	3'-8"
" "					B3	8	4	11'-11"
" "	B4	10	4	4'-2"				
" "					B5	6	4	5'-1"
" "					B6	6	4	5'-4"
irder Bottom	G1	8	10	26'-0"				
" "	G2	4	14	32'-0"				
" "	G3	12	14	46'-0"				
" "	G4	8	14	56'-0"				
" "					G5	16	14	12'-0"
" "					G6	16	14	18'-0"
" "	G7	16	11	17'-0"				
	G8	(Not used						
Girder Sides	G9	16	4	37'-6"				
" "	G10	16	11	41'-0"				
" "	G11	16	8	6'-0"				
" "	G12	8	4	29'-6"				
der Stirrups (Cantilever)					G13	8	4	8'-3½"
" "					G14	8	4	8'-7"
" "					G15	8	4	8'-10½"

BENDING DIAGRAMS
ALL DIMENSIONS ARE OUT TO OUT

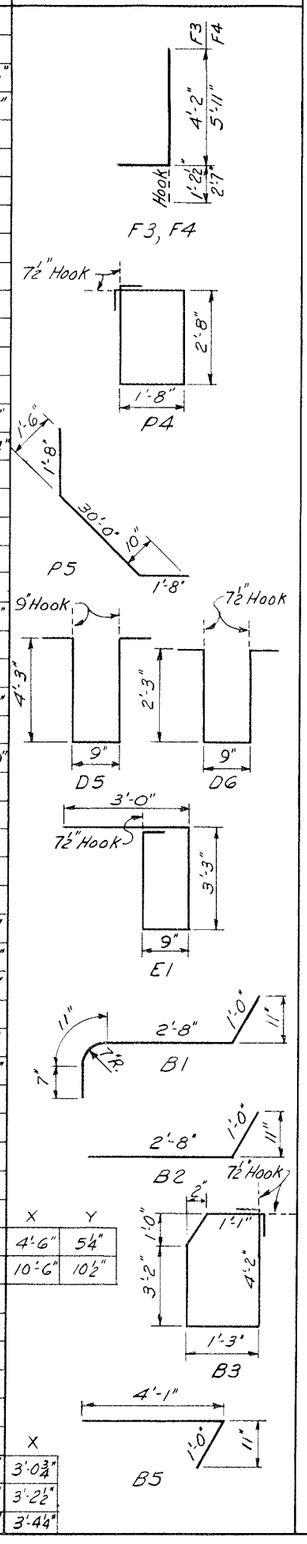

	X	Y
	4'-6"	5¼"
	10'-6"	10½"
	X	
	3'-0¾"	
	3'-2½"	
	3'-4¼"	

LOCATION	STRAIGHT BARS MARK	NO.	SIZE	LENGTH	BENT BARS. MARK	NO.	SIZE	LENGTH	X
Girder Stirrups (Cantilever)									
" " "					G16	8	4	9'-2"	3'-6"
" " "					G17	8	4	9'-6"	3'-8"
" " "					G18	8	4	9'-9½"	3'-9¾"
" " "					G19	8	4	10'-1"	3'-11½"
" " "					G20	8	4	10'-5"	4'-1½"
" " "					G21	8	4	10'-7"	4'-2½"
" " "					G22	8	4	10'-9"	4'-3½"
" " "					G23	8	4	10'-11"	4'-4½"
" " "					G24	8	4	11'-1"	4'-5½"
" " "					G25	8	4	11'-3"	4'-6½"
" " "					G26	8	4	11'-5"	4'-7½"
" " "					G27	8	4	11'-7"	4'-8½"
Girder Stirrups (70' Span)					G28	8	4	11'-7½"	4'-8¾"
" " "					G29	8	4	11'-6"	4'-8"
" " "					G30	8	4	11'-5"	4'-7½"
" " "					G31	8	4	11'-4"	4'-7"
" " "					G32	8	4	11'-2½"	4'-6¼"
" " "					G33	8	4	11'-1½"	4'-5¾"
" " "					G34	8	4	11'-0"	4'-5"
" " "					G35	8	4	10'-11"	4'-4½"
" " "					G36	8	4	10'-10"	4'-4"
" " "					G37	8	4	10'-9"	4'-3½"
" " "					G38	8	4	10'-8"	4'-3"
" " "					G39	8	4	10'-7"	4'-2½"
" " "					G40	8	4	10'-6"	4'-2"
" " "					G41	8	4	10'-5"	4'-1½"
" " "					G42	8	4	10'-4"	4'-1"
" " "					G43	8	4	10'-3"	4'-0½"
" " "					G44	8	4	10'-2"	4'-0"
" " "					G45	8	4	10'-1"	3'-11½"
" " "					G46	8	4	10'-0"	3'-11"
" " "					G47	8	4	9'-11"	3'-10½"
" " "					G48	8	4	9'-10½"	3'-10¼"
" " "					G49	8	4	9'-9½"	3'-9¾"
" " "					G50	8	4	9'-8½"	3'-9¼"
" " "					G51	8	4	9'-8"	3'-9"
" " "					G52	8	4	9'-7"	3'-8½"
" " "					G53	8	4	9'-6"	3'-8"
" " "					G54	8	4	9'-5½"	3'-7¾"
" " "					G55	8	4	9'-4½"	3'-7¼"
" " "					G56	8	4	9'-4"	3'-7"
" " "					G57	8	4	9'-3½"	3'-6¾"
" " "					G58	8	4	9'-2½"	3'-6¼"
" " "					G59	8	4	9'-1½"	3'-5¾"
" " "					G60	8	4	9'-0½"	3'-5¼"
" " "					G61	8	4	8'-11½"	3'-4¾"
" " "					G62	8	4	8'-10½"	3'-4¼"
" " "					G63	8	4	8'-10"	3'-4"
" " "					G64	8	4	8'-9"	3'-3½"
" " "					G65	8	4	8'-8½"	3'-3¼"
" " "					G66	8	4	8'-7½"	3'-2¾"
" " "					G67	8	4	8'-6½"	3'-2¼"
" " "					G68	8	4	8'-6"	3'-2"

BENDING DIAGRAMS
ALL DIMENSIONS ARE OUT TO OUT

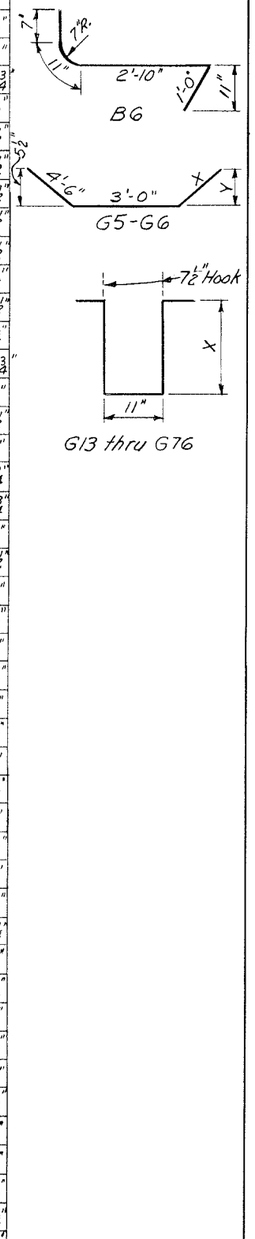

LOCATION	STRAIGHT BARS MARK	NO.	SIZE	LENGTH	BENT BARS MARK	NO.	SIZE	LENGTH	X
Girder Stirrups (70' Span)					G69	8	4	8'-5"	3'-1½"
" " "					G70	8	4	8'-4½"	3'-1¼"
" " "					G71	8	4	8'-4"	3'-1"
" " "					G72	8	4	8'-3½"	3'-0¾"
" " "					G73	8	4	8'-3"	3'-0½"
" " "					G74	4	4	8'-2½"	3'-0¼"
" " "					G75	4	4	8'-2"	3'-0"
" " "					G76	4	4	8'-2"	3'-0"
Girder Top	G77	16	11	14'-0"					
" "	G78	16	11	22'-0"					
" "	G79	16	11	30'-0"					
" "	G80	16	11	40'-0"					
" "	G81	16	11	43'-0"					
" "	G82	8	8	28'-0"					

DEPARTMENT OF COMMERCE
BUREAU OF PUBLIC ROADS REGION 7 SAN FRANCISCO, CALIFORNIA

DOLORES RIVER BRIDGE

STA. 1640 + 25

COLORADO FOREST HIGHWAY PROJECT I-2 (3)

SCALE: NONE AUG. 1964

BRIDGE DRWG. 4 OF 5 DRWGS.

RG1723-D

LOCATION	STRAIGHT BARS MARK	NO.	SIZE	LENGTH	BENT BARS MARK	NO.	SIZE	LENGTH
Slab Transv. Top & Bott.	S1	2	6	3'-10"				
" " " "	S2	2	6	4'-11"				
" " " "	S3	2	6	6'-0"				
" " " "	S4	2	6	7'-1"				
" " " "	S5	2	6	8'-3"				
" " " "	S6	2	6	9'-4"				
" " " "	S7	2	6	10'-5"				
" " " "	S8	2	6	11'-6"				
" " " "	S9	2	6	12'-8"				
" " " "	S10	2	6	13'-9"				
" " " "	S11	2	6	14'-10"				
" " " "	S12	2	6	15'-11"				
" " " "	S13	2	6	17'-1"				
" " " "	S14	2	6	18'-2"				
" " " "	S15	2	6	19'-3"				
" " " "	S16	2	6	20'-4"				
" " " "	S17	2	6	21'-6"				
" " " "	S18	2	6	22'-7"				
" " " "	S19	2	6	23'-8"				
" " " "	S20	2	6	24'-9"				
" " " "	S21	2	6	25'-11"				
" " " "	S22	2	6	27'-0"				
" " " "	S23	2	6	28'-1"				
" " " "	S24	2	6	29'-2"				
" " " "	S25	2	6	30'-4"				
" " " "	S26	2	6	31'-5"				
" " " "	S27	2	6	32'-6"				
" " Bent					S28	78	6	33'-6"
" " Top	S29	79	6	34'-6"				
" " Bottom	S30	79	6	32'-0"				
" " Top & Bott.	S31	2	6	32'-6"				
" " " "	S32	2	6	31'-6"				
" " " "	S33	2	6	30'-7"				
" " " "	S34	2	6	29'-8"				
" " " "	S35	2	6	28'-8"				
" " " "	S36	2	6	27'-9"				
" " " "	S37	2	6	26'-9"				
" " " "	S38	2	6	25'-10"				
" " " "	S39	2	6	24'-10"				
" " " "	S40	2	6	23'-11"				
" " " "	S41	2	6	23'-0"				
" " " "	S42	2	6	22'-0"				
" " " "	S43	2	6	21'-1"				
" " " "	S44	2	6	20'-1"				
" " " "	S45	2	6	19'-2"				
" " " "	S46	2	6	18'-3"				
" " " "	S47	2	6	17'-3"				
" " " "	S48	2	6	16'-4"				
" " " "	S49	2	6	15'-4"				
" " " "	S50	2	6	14'-5"				
" " " "	S51	2	6	13'-5"				
" " " "	S52	2	6	12'-6"				
" " " "	S53	2	6	11'-6"				
" " " "	S54	2	6	10'-7"				

BENDING DIAGRAMS
ALL DIMENSIONS ARE OUT TO OUT

LOCATION	STRAIGHT BARS MARK	NO.	SIZE	LENGTH	BENT BARS. MARK	NO.	SIZE	LENGTH
Slab Transv. Top & Bott.	S55	2	6	9'-8"				
" " " "	S56	2	6	8'-8"				
" " " "	S57	2	6	7'-9"				
" " " "	S58	2	6	6'-9"				
" " " "	S59	2	6	5'-10"				
" " " "	S60	2	6	4'-11"				
" " " "	S61	2	6	3'-11"				
" " " "	S62	2	6	3'-0"				
End Beam Sta. 1639+70	S63	2	6	38'-7"				
	S64	(Not used)						
	S65	(Not used)						
End Beam Sta. 1640+80	S66	2	6	40'-0"				
Slab Longit. Top	S67	4	5	55'-6"				
End Bracket Slab Top	S68	4	5	4'-0"				
" " " "					S69	4	5	4'-11"
Slab Longit. Top	S70	15	5	11'-0"				
Slab Longit.	S71	7	5	15'-0"				
" "	S72	1	5	52'-6"				
" "	S73	8	5	41'-0"				
" "	S74	9	5	56'-6"				
" "	S75	1	5	7'-0"				
" "	S76	1	5	39'-0"				
" " Over Diaph.	S77	36	5	5'-0"				
" " Bottom	S78	46	6	55'-6"				
Curb Transv.					C1	230	4	3'-10"
" Longit.	C2	24	5	12'-2"				
" "	C3	4	5	18'-5"				
" "					C4	2	5	11'-0"
" "					C5	2	5	11'-3"
" "	C6	2	5	10'-2"				
" "	C7	2	5	10'-5"				

BENDING DIAGRAMS
ALL DIMENSIONS ARE OUT TO OUT

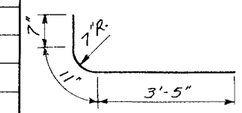

S69

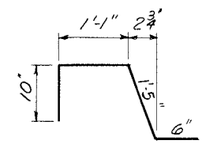

C1

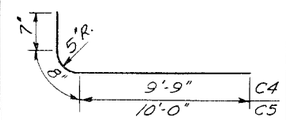

C4, C5

LOCATION	STRAIGHT BARS MARK	NO.	SIZE	LENGTH	BENT BARS MARK	NO.	SIZE	LENGTH

BENDING DIAGRAMS
ALL DIMENSIONS ARE OUT TO OUT

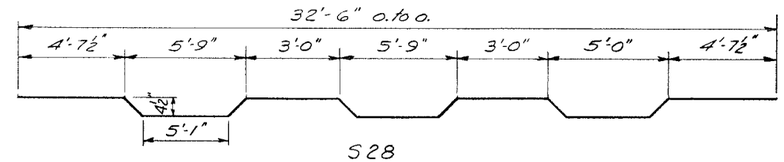

S28

DEPARTMENT OF COMMERCE
BUREAU OF PUBLIC ROADS REGION 7 SAN FRANCISCO, CALIFORNIA

DOLORES RIVER BRIDGE

STA. 1640 + 25

COLORADO FOREST HIGHWAY PROJECT I-2(3)

SCALE: NONE AUG. 1964

BRIDGE DRWG. 5 OF 5 DRWGS.

RG 1723-E

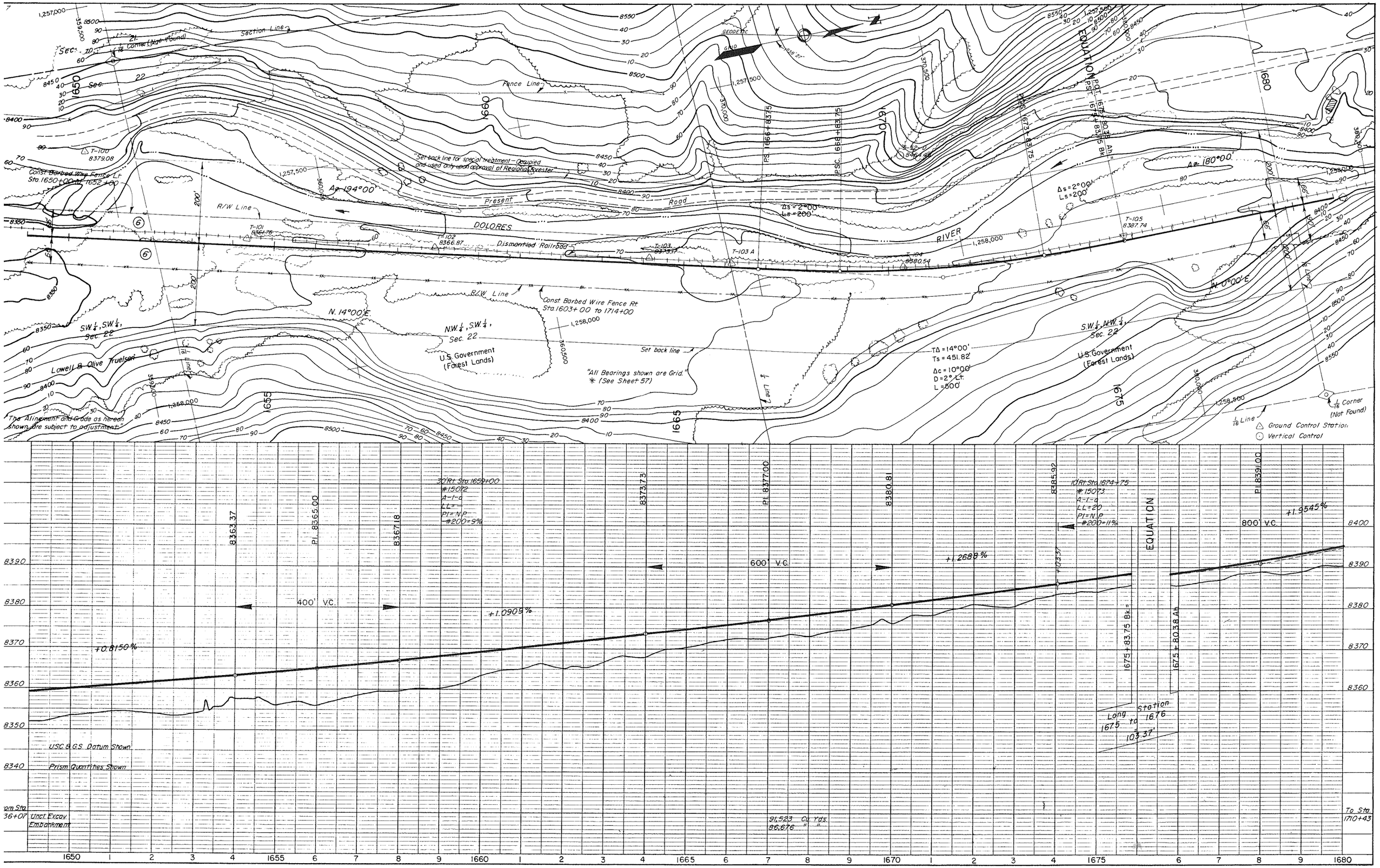

Section Line
Fence Line
Present Road
DOLORES RIVER
Dismantled Railroad
R/W Line
Const. Barbed Wire Fence Lt. Sta. 1650+00 to 1652+00
"Set back line for special treatment - Occupied and used only upon approval of Regional Forester"
Const. Barbed Wire Fence Rt. Sta. 1603+00 to 1714+00
Set back line
"All Bearings shown are Grid." * (See Sheet 57)
"The Alignment and Grade as hereon shown are subject to adjustment."
Lowell & Olive Truelson
U.S. Government (Forest Lands)
N. 14°00'E.
N. 0°00'E.
Δs = 2°00' Ls = 200'
Δ = 180°00'
TΔ = 14°00' Ts = 451.82' Δc = 10°00' D = 2° Lt. L = 500'
Ground Control Station
Vertical Control
1/16 Corner (Not Found)
1/16 Line
30' Rt. Sta. 1659+00 #15072 A-1-a LL=- PI=N.P. #200=9%
10' Rt. Sta. 1674+75 #15073 A-1-a LL=20 PI=N.P. #200=11%
EQUATION
400' V.C.
600' V.C.
800' V.C.
+0.8150%
+1.0909%
+1.2688%
+1.9545%
Long Station 1675 to 1676 103.37'
USC & GS Datum Shown
Prism Quantities Shown
Unct. Excav. Embankment
91,523 Cu. Yds.
86,676 " "
To Sta. 1710+43

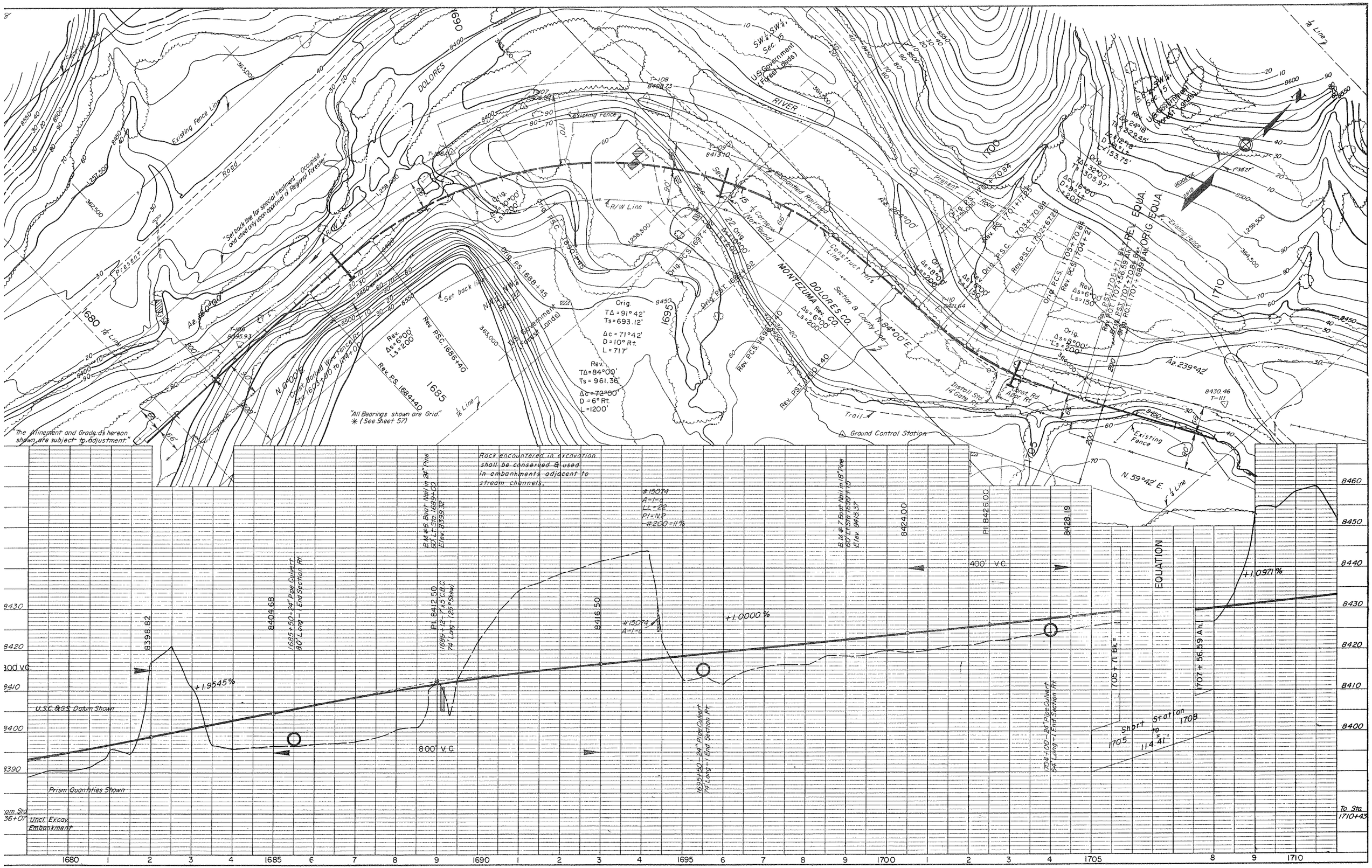
"The Alinement and Grades hereon shown are subject to adjustment."
"All Bearings shown are Grid." * (See Sheet 57)
"Set back line for special treatment — Occupied and used only upon approval of Regional Forester."
DOLORES RIVER
MONTEZUMA CO.
DOLORES CO.
U.S. Government (Forest Lands)
Existing Fence Line
Present Road
Abandoned Railroad
Construct this Section B County Line
Ground Control Station
Trail
Existing Fence
N. 59°42' E. ½ Line
Az. 239°42'
Az. 84°00'
N. 84°00' E.
N. 0°00' E.
Rev. Δs=6°00' Ls=200
Orig. TΔ=91°42' Ts=693.12' Δc=71°42' D=10° Rt. L=717'
Rev. TΔ=84°00' Ts=961.36' Δc=72°00' D=6° Rt. L=1200'
Rev. P.S.C. 1686+40
Rev. P.S. 1684+40
Rev. P.C.S. 1699+40
Rev. P.S.T. 1700+40
Orig. P.S. 1688+45
Orig. P.S.C. 1690+50
Orig. P.C.S. 1697+40
Orig. P.S.T. 1698+40
Rev. P.S.C. 1701+17.25
Rev. P.C.S. 1705+70.84
Rev. P.S.T. 1707+56.59 Ahd.
Orig. P.S.T. 1707+70.84
Rev. P.S.T. 1707+70.84
Rev. P.S.C. 1702+67.25
Orig. P.S. 1699+00
Orig. P.S.C. 1700+00
Rev. P.C.S. 1705+70.84
Rev. P.S.T. 1704+21
Rev. P.S.T. 1705+71 Bk.
Orig. P.S.T. 1707+56.59 Ahd.
Orig. P.S.T. 1707+70.84 Bk.
Rev. P.S.T. 1707+70.84 Ahd.
Rev. P.S.T. 1707+56.59 Bk.
Rev. P.S.T. 1707+70.84 Ahd.
Install Std. 14 Gate Rd.
Post Rd. Apr. Rd.
Δ=24°18' Ts=229.45' D=18°18' L=153.75'
Δ=32°00' Ts=305.97' D=9°00' L=200'
Δ=8°00' Ls=200
Δs=8°00' Ls=200
Δs=6°00' Ls=150
Δs=8°00' Ls=200
Δs=6°00' Ls=200
Δs=8°00' Ls=200
Δs=6°00' Ls=150
Δs=8°00' Ls=200
Az. 84°00'
Az. 239°42'
Set back line
Existing Fence
Rock encountered in excavation shall be conserved & used in embankments adjacent to stream channels.
B.M. #6 Boot Nail in 24" Pine 60' Lt. Sta. 1689+00 Elev. 8399.92
B.M. #7 Boot Nail in 18" Pine 60' Lt. Sta. 1699+15 Elev. 8415.37
#15074 A-1-a LL=22 PI=N.P. -#200=11%
Pl. 8412.50
Pl. 8426.00
8398.82
8404.68
8416.50
8424.00
8428.19
1685+50-24" Pipe Culvert 80' Long-1 End Section Pk.
1695+50-24" Pipe Culvert 74' Long-1 End Section Pk.
1704+00-24" Pipe Culvert 54' Long-1 End Section Pk.
+1.9545%
+1.0000%
+1.0971%
800' V.C.
400' V.C.
300' V.C.
U.S.C.&G.S. Datum Shown
Prism Quantities Shown
Unclassified Excavation Embankment
EQUATION
1705+71 Bk.=
1707+56.59 Ahd.
Short Station 1705 to 1708 = 114.41'
To Sta. 1710+43
8460
8450
8440
8430
8420
8410
8400
8390
1680
1685
1690
1695
1700
1705
1710

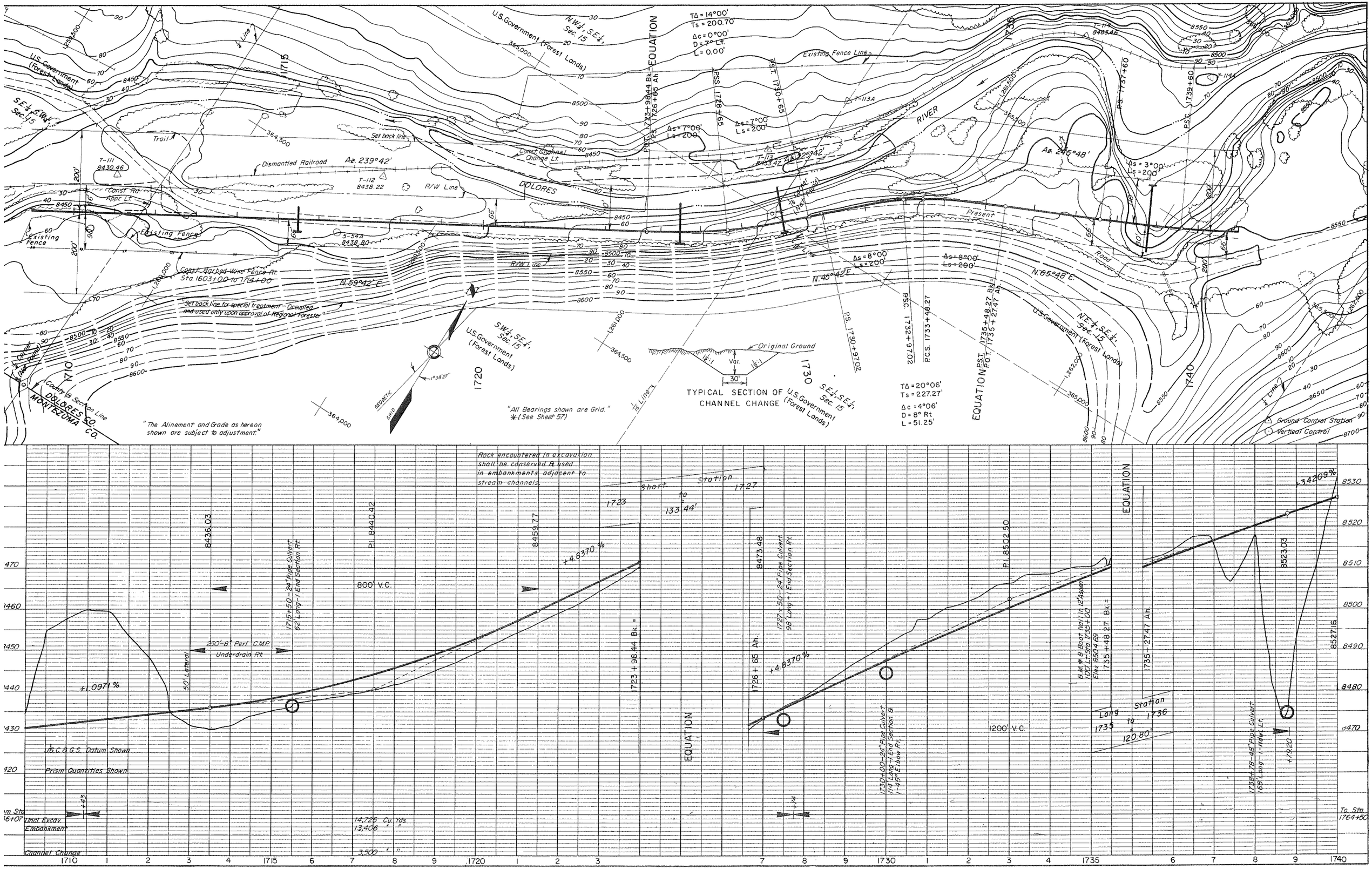

U.S. Government (Forest Lands)
N.W.¼, S.E.¼, Sec. 15
TΔ = 14°00'
Ts = 200.70'
Δc = 0°00'
D = 7° Lt.
L = 0.00'
EQUATION
Existing Fence Line
Trail
Set back line
Dismantled Railroad
Az. 239°42'
Const. Channel Change Lt.
Const. Rd. Appr. Lt.
R/W Line
DOLORES
RIVER
Az. 225°42'
Az. 246°48'
Δs = 7°00'
Ls = 200'
Δs = 3°00'
Ls = 200'
Present
Road
Existing Fence
Const. Barbed Wire Fence Rt.
Sta. 1603+00 to 1714+00
N. 59°42' E.
N. 45°42' E.
N. 65°48' E.
Δs = 8°00'
Ls = 200'
"Set back line for special treatment - Occupied and used only upon approval of Regional Forester"
S.W.¼, S.E.¼, Sec. 15
S.E.¼, S.E.¼, Sec. 15
N.E.¼, S.E.¼, Sec. 15
Original Ground
TYPICAL SECTION OF CHANNEL CHANGE
Var.
30'
TΔ = 20°06'
Ts = 227.27'
Δc = 4°06'
D = 8° Rt.
L = 51.25'
EQUATION
P.S.T. 1735+48.27 Bk. = P.O.T. 1735+27.47 Ah.
P.S.C. 1732+97.02
P.C.S. 1733+48.27
P.S. 1730+97.02
P.S.T. 1723+98.44 Bk. = P.S. 1726+65 Ah.
P.S.S. 1728+65
P.S.T. 1730+65
P.S. 1737+60
P.S.C. 1739+60
Ground Control Station
Vertical Control
"The Alinement and Grade as hereon shown are subject to adjustment."
"All Bearings shown are Grid."
*(See Sheet 57)
GEODETIC
GRID
1°38'27"
County & Section Line
DOLORES CO.
MONTEZUMA CO.
1710
1715
1720
1730
1735
1740
Rock encountered in excavation shall be conserved & used in embankments adjacent to stream channels.
Short Station 1723 to 1727
133.44'
8436.03
P.I. 8440.42
8459.77
8473.48
P.I. 8502.50
8523.03
8527.16
+4.8370%
+4.8370%
+1.0971%
+3.4209%
800' V.C.
1200' V.C.
250'-8" Perf. C.M.P. Underdrain Rt.
50' Lateral
1715+50-24" Pipe Culvert 62' Long-1 End Section Rt.
1723+98.44 Bk. =
1726+65 Ah.
1727+50-24" Pipe Culvert 98' Long-1 End Section Rt.
1730+00-24" Pipe Culvert 114' Long-1 End Section & 1-45° Elbow Rt.
B.M. #8 Boat Nail in 12" Aspen 100' Lt. Sta. 1735+00 Elev. 8504.69
1735+48.27 Bk. =
1735-27.47 Ah.
Long Station 1735 to 1736
120.80'
1738+78-48" Pipe Culvert 168' Long-1-Hdwl. Lt.
+79.20
U.S.C.&G.S. Datum Shown
Prism Quantities Shown
Uncl. Excav. Embankment
Channel Change
14,726 Cu. Yds.
13,406 " "
3,500 " "
To Sta. 1764+50

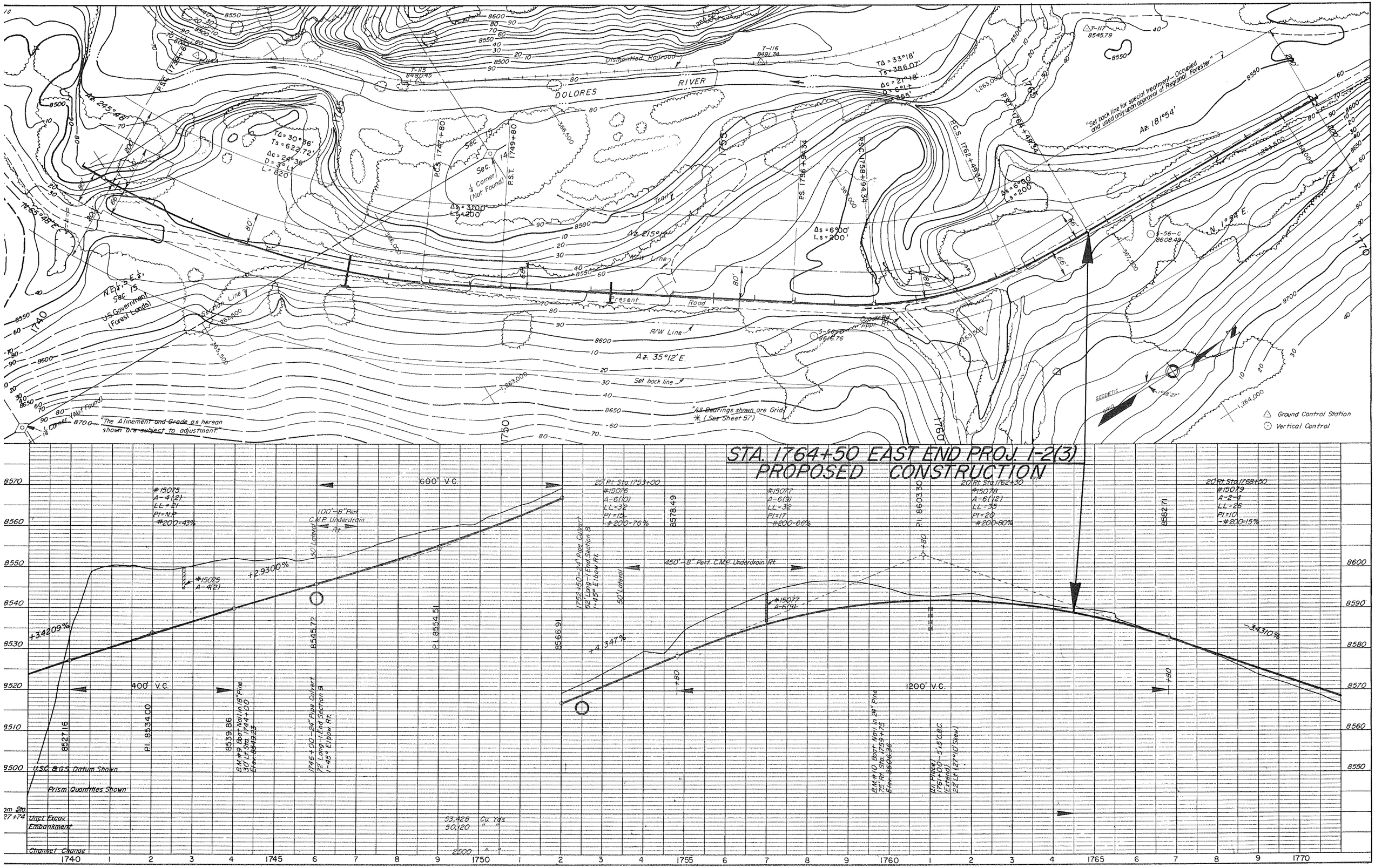

DOLORES RIVER
Dismantled Railroad
Present Road
R/W Line
Set back line
Section Line
Az. 35°12' E.
Az. 181°54'
Az. 245°48'
N. 1°54' E.
N. 65°48' E.
"Set back line for special treatment - Occupied and used only upon approval of Regional Forester"
"All Bearings shown are Grid" (See Sheet 57)
"The Alinement and Grade as herein shown are subject to adjustment"
U.S. Government (Forest Lands)
Ground Control Station
Vertical Control
STA. 1764+50 EAST END PROJ. I-2(3)
PROPOSED CONSTRUCTION
600' V.C.
400' V.C.
1200' V.C.
450'-8" Perf. C.M.P. Underdrain Rt.
100'-8" Perf. C.M.P. Underdrain Rt.
+3.4209%
+2.9300%
+4.347%
-3.4310%
U.S.C. & G.S. Datum Shown
Prism Quantities Shown
Unct. Excav.
Embankment
Channel Change
53,428 Cu. Yds.
50,120
2500

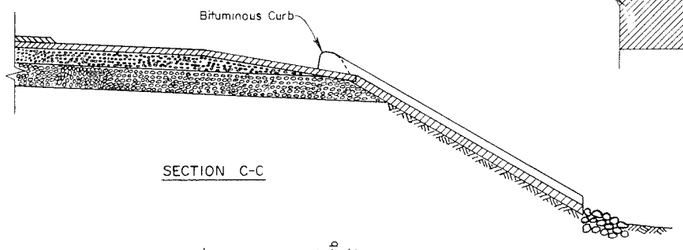

SECTION C-C

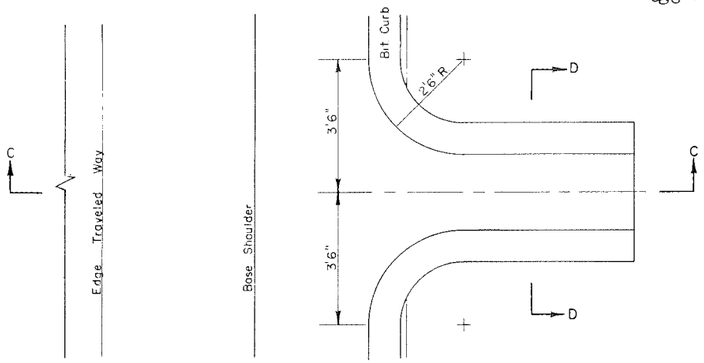

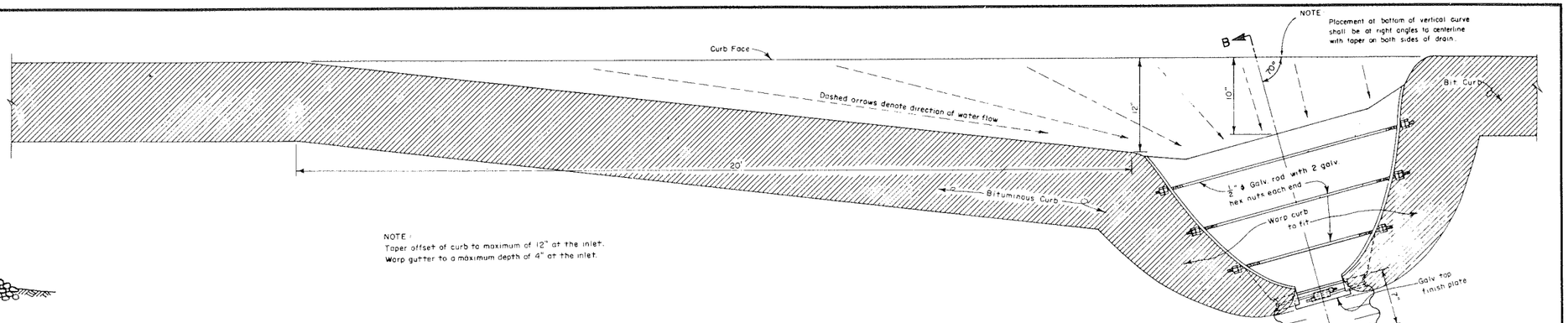

NOTE:
Taper offset of curb to maximum of 12" at the inlet.
Warp gutter to a maximum depth of 4" at the inlet.

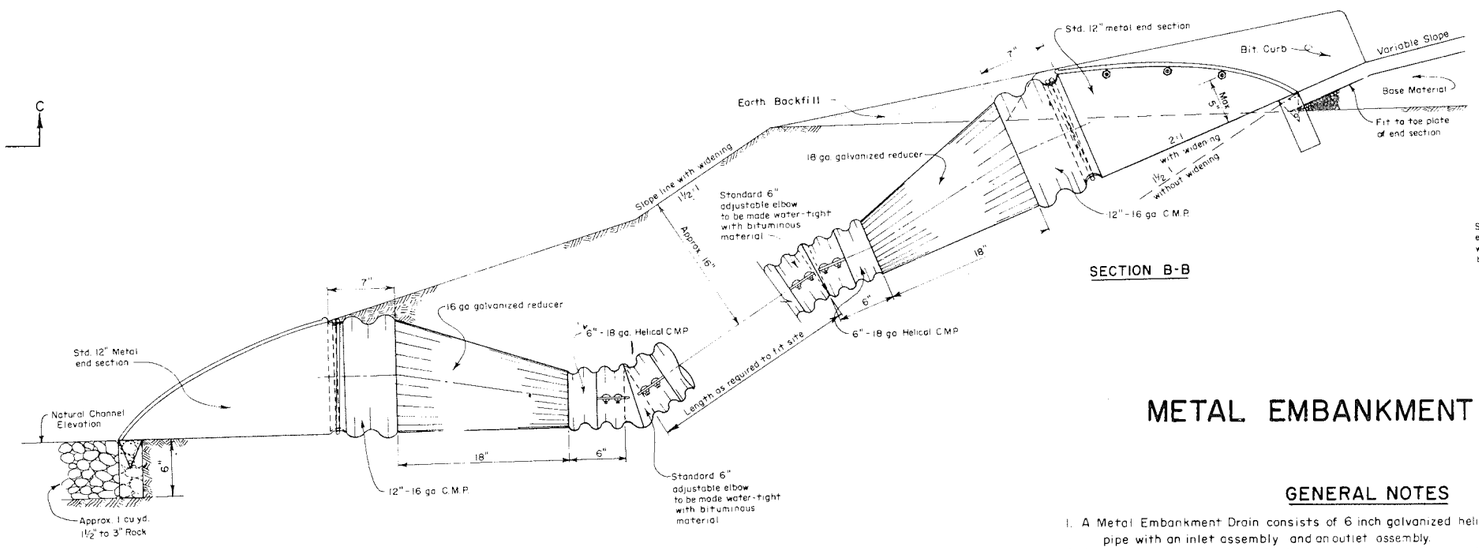

SECTION B-B

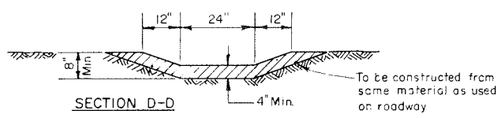

SECTION D-D

BITUMINOUS RUNDOWN

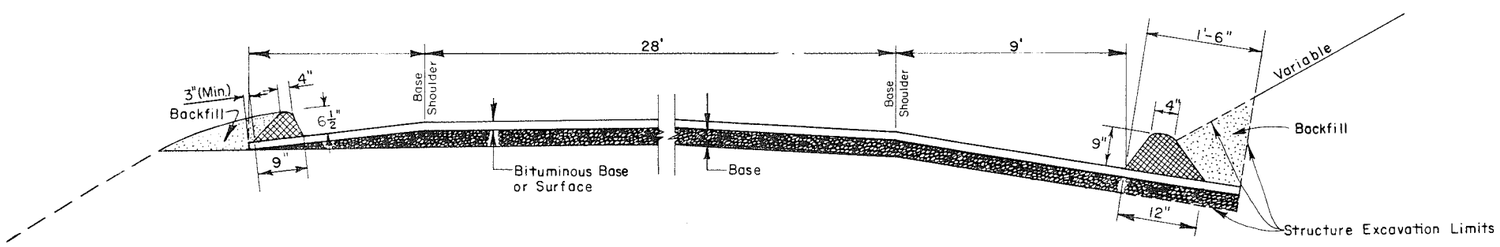

ON FILL

IN CUT
USE

SECTION SHOWING PAVEMENT WIDENING AND BITUMINOUS CURBS

Note:
To be constructed at locations as shown on the plans, or as directed by the engineer.

METAL EMBANKMENT DRAIN

GENERAL NOTES

1. A Metal Embankment Drain consists of 6 inch galvanized helically corrugated metal pipe with an inlet assembly and an outlet assembly.
2. An inlet assembly consists of a 12 inch metal end section, modified by the addition of trash bars; a transition section from 12 inch to 6 inch pipe; an adjustable 6 inch elbow; and special transitional treatment of adjacent curbing as shown on the diagram.
3. An outlet assembly consists of a 12 inch metal end section; transition section; adjustable elbow and a rock stilling basin as shown on the diagram.
4. Payment for Metal Embankment Drains will be made as follows:
   - 6 inch corrugated metal drain pipe . . . . . Linear Foot
   - Metal drain inlets . . . . . Each
   - Metal drain outlets . . . . . Each
5. Adjustable elbow shall be made water-tight by surrounding it with a mixture of bituminous material and sand, gravel or crushed aggregate, similar to the provisions of Section 317, Bituminous Plant-Mix Surfacing. The cost of this work shall be included in the prices paid for metal drain inlets and outlets.

Revisions: 6/1963, 7/1964

U.S. DEPARTMENT OF COMMERCE
BUREAU OF PUBLIC ROADS
REGION NO. 9 DENVER, COLORADO

STANDARD EMBANKMENT DRAINS, BITUMINOUS CURBS AND RUNDOWNS

STD. 107

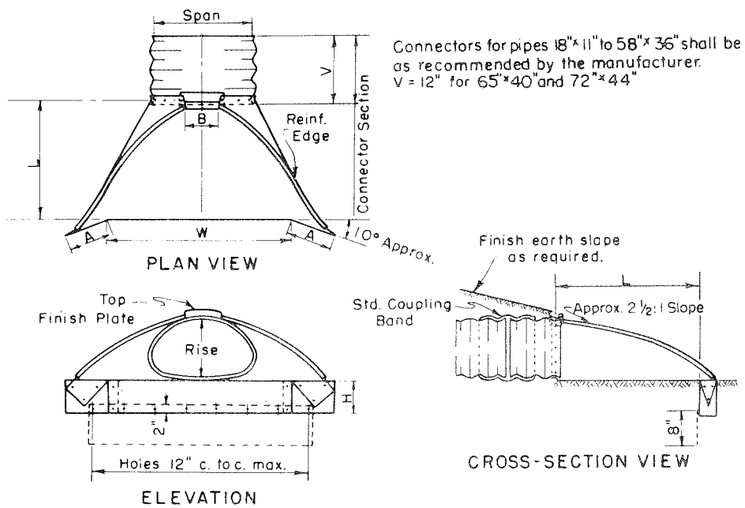

Connectors for pipes 18"x 11" to 58"x 36" shall be as recommended by the manufacturer. V = 12" for 65"x40" and 72"x44"

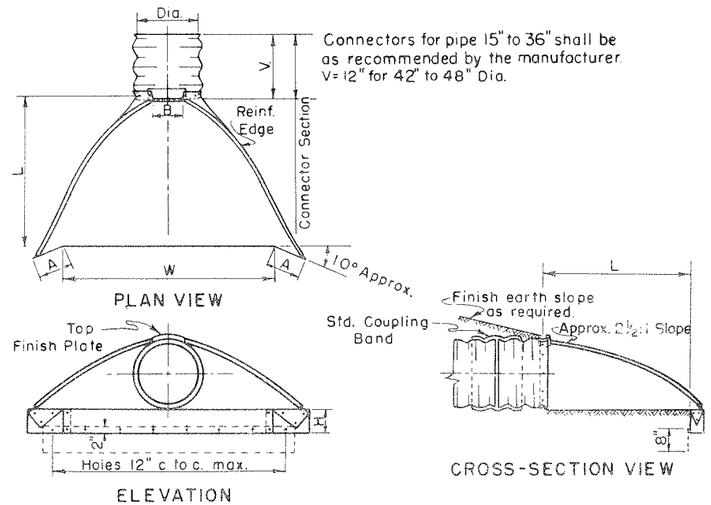

Connectors for pipe 15" to 36" shall be as recommended by the manufacturer. V= 12" for 42" to 48" Dia.

GENERAL NOTES FOR PIPE-ARCH CULVERT METAL END SECTIONS

Toe plates shall be installed on end sections when directed by the Engineer. Toe plate shall be punched to match holes in skirt lip and shall be fastened in place with $\frac{3}{8}$" galvanized bolts. Length of toe plate is W + 10" for Pipe-Arches with Rise of 11" to 27" incl. and W + 18" min. for Pipe-Arches with Rise of 31" to 44" incl.

Skirt Section for Pipe-Arches with Rise of 11" to 22" incl shall be made in one piece
Skirt Section for Pipe-Arches with Rise of 27" to 36" incl may be made from two sheets joined by riveting or bolting on center line
Skirt Section for Pipe-Arches with Rise of 40" to 44" incl may be made from three sheets joined by riveting or bolting at equal distances from center line

Connector Section, Corner Plate and Toe Plate shall be same gage as Skirt and shall be galvanized when ferrous metal pipe is used.

Norm. Culv. Dia.	Arch Dimen. Span	Arch Dimen. Rise	Gage	DIMENSIONS A 1" Tol.	B Max.	H 1" Tol.	L 1½" Tol.	W 2" Tol.
15"	18"	11"	16	4½"	9"	6"	19"	30"
18"	22"	13"	16	5¼	10	6	23	36
24"	29"	18"	14	7	14	6	31½	48
30"	36"	22"	14	8¾	16	6	38½	60
36"	43"	27"	12	10¾	17½	7⅝	47	75
42"	50"	31"	12	12¼	20	9⅛	54	85
48"	58"	36"	12	14	26	10⅝	63	96
54"	65"	40"	12	15¾	27	10⅝	70	112
60"	72"	44"	10	17¼	28	12⅛	77	128

METAL END SECTION FOR PIPE ARCH-CULVERTS

Pipe Diam.	Gage	DIMENSIONS A 1" Tol.	B Max.	H 1" Tol.	L 1½" Tol.	W 2" Tol.
12"	16	4¾	6"	6"	21"	24"
15"	16	6"	8"	6"	26"	30"
18"	16	7	9	6	31	36
24"	14	9½	12	6	42	48
30"	14	12	15	7½	52½	60
36"	12	14	18	9	63	72
42"	12	16	21	10½	73½	84
48"	12	18	27	12	84	90

GENERAL NOTES FOR ROUND PIPE CULVERT METAL END SECTIONS

Toe plates shall be installed on end sections when directed by the Engineer. Toe plate shall be punched to match holes in skirt lip and shall be fastened in place with $\frac{3}{8}$" galvanized bolts. Length of toe plate is W+10" for 12" to 30" dia. pipe incl. and W+ 22" for 36" to 48" dia. pipe incl.

Skirt Section for 12" to 24" dia pipe incl shall be made in one piece
Skirt Section for 30" to 48" dia pipe incl may be made from two sheets joined by riveting or bolting on center line.

Connector Section, Corner Plate and Toe Plate shall be same gage as skirt and shall be galvanized when ferrous metal pipe is used.

METAL END SECTION FOR PIPE CULVERTS

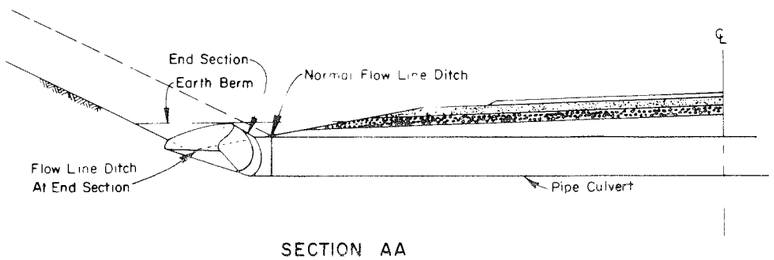

SECTION AA

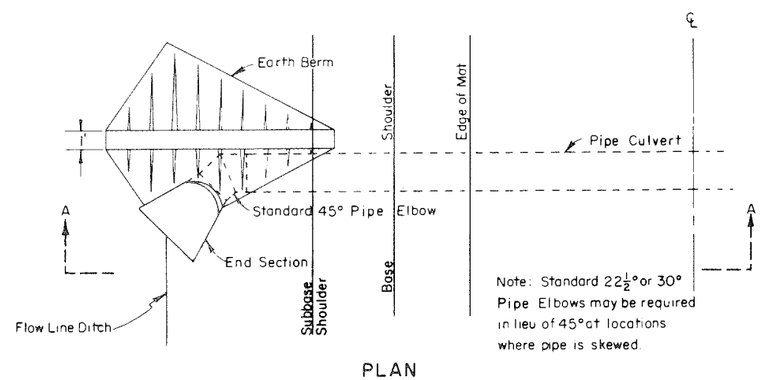

PLAN

TYPICAL END SECTION INSTALLATION IN CUT SECTION

HEIGHT OF FILL AND GAGE FOR WELDED GALVANIZED CORRUGATED METAL PIPE
1" x 3" Corrugations

Pipe Diam.	Height of Cover (Feet) 1 to 10	10 to 15	15 to 20	20 to 25	25 to 30	30 to 35	35 to 40	40 to 45	45 to 50	50 to 60	60 to 70	70 to 80	80 to 100
30"	16	16	16	16	16	16	16	16	14	14	14	12	12
36"	16	16	16	16	16	16	14	14	14	14	12	12	12
42"	16	16	16	16	16	14	14	14	14	12	12	12	10
48"	14	14	14	14	12	12	12	12	12	12	10	8	
54"	14	14	14	14	12	12	12	12	12	10	8		
60"	14	14	14	12	12	12	12	12	10	8			
66"	12	12	12	12	12	12	12	10	8				
72"	12	12	12	12	12	12	10	8					
78"	12	12	12	10	8	8	8						
84"	12	12	10	10	8								
90"	12	10	8	8									
96"	10	10	8										
102"	10	8											
108"	8												

Type 2 Seam — Type 3 Seam — USE STRUCTURAL PLATE PIPE — 5% Elongation Limit Line

HEIGHT OF FILL AND GAGE FOR ALUMINUM ALLOY CORRUGATED METAL PIPE
$\frac{1}{2}$" x 2$\frac{2}{3}$" Corrugations

Pipe Diam.	Height of Cover (ft) 1 to 10	11 to 15	16 to 20	21 to 25	26 to 30	31 to 35
18"	16	16	16	16	14	12
24"	16	14	14	14	12	10
30"	14	14	14	12	10	10
36"	14	12	12	10	10	8
42"	12	12	10	10	10	
48"	12	12	10	10	8	
54"	12	12	12	10	8	
60"	10	8	8	8		
66"	10	8	8			
72"	10	8	8			

HEIGHT OF FILL AND GAGE FOR GALVANIZED CORRUGATED METAL PIPE & GALVANIZED HELICALLY CORRUGATED METAL PIPE
(Riveted or Spot Welded) $\frac{1}{2}$ x 2$\frac{2}{3}$" Corrugations

Pipe Diam.	Height of Cover (Feet) 1 to 10	11 to 15	16 to 20	21 to 25	26 to 30	31 to 35	36 to 40	41 to 50	51 to 60	61 to 70	71 to 80
18"	16	16	16	16	16	14	14	14	12	12	12
24"	16	16	14	14	14	14	12	10	8	8	
30"	16	16	14	14	12	12	12	12	10	10	
36"	14	14	14	12	12	12	12	10	8		
42"	14	14	12	12	12	12	10	8			
48"	14	14	12	12	12	12	10	8			
54"	12	12	12	12	12	10	8				
60"	12	12	12	12	12	10	8				
66"	10	10	10	10	8	8	8				
72"	10	8	8	8	8	8					
78"	8	8	8	8	8	8					
84"	8	8	8	8	8						

USE STRUCTURAL PLATE PIPE

Note:
Gages of metal culvert pipes shall be not lighter than those shown in the above tables for the various conditions.

Any culvert pipe, whose diameter and height of cover places it below and to the right of the heavy lines in the above tables, shall be factory-shaped to a 5% vertical elongation.

DETAILS OF SPOT WELDED LONGITUDINAL SEAM
1" x 3" Corrugations

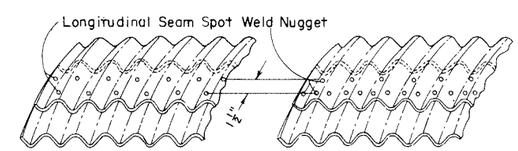

TYPE 2 SEAM
Two welds per corrugation in staggered line.

TYPE 3 SEAM
Three welds per corrugation.

Revisions 2/1964, 5/1964, 6/1964, 10/1964, 3/1965

U.S. DEPARTMENT OF COMMERCE
BUREAU OF PUBLIC ROADS
REGION NO. 9 DENVER, COLORADO

STANDARD METAL END SECTIONS AND FILL-GAGE TABLES FOR METAL PIPE CULVERTS

STD. 108

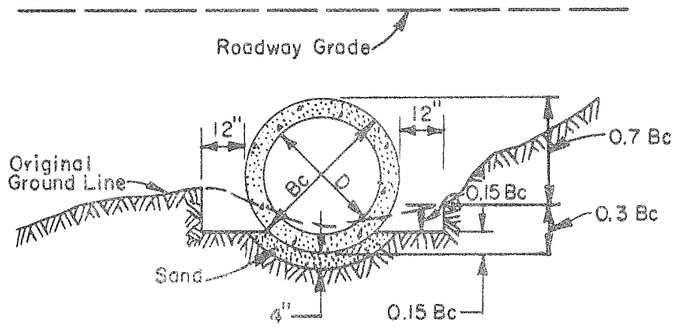

0.7 PROJECTION RATIO
"B" BEDDING

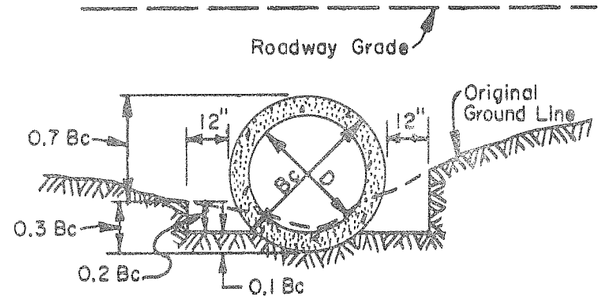

0.7 PROJECTION RATIO
"C" BEDDING

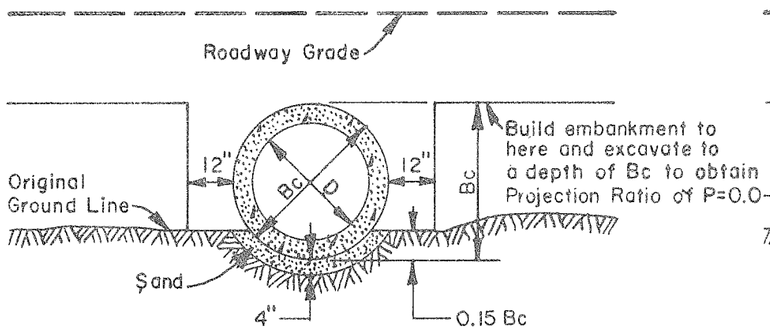

0.0 PROJECTION RATIO
"B" BEDDING

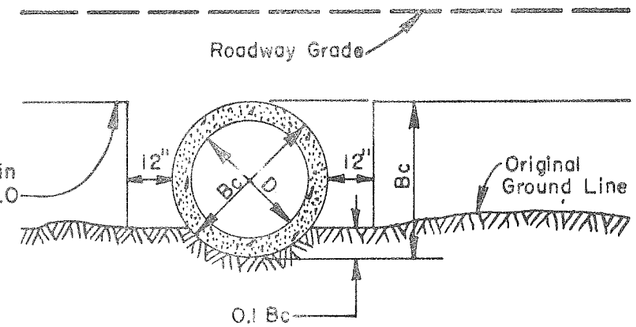

$$P = \frac{\text{top of pipe above or below top of trench}}{\text{O.D. of pipe}}$$

0.0 PROJECTION RATIO
"C" BEDDING

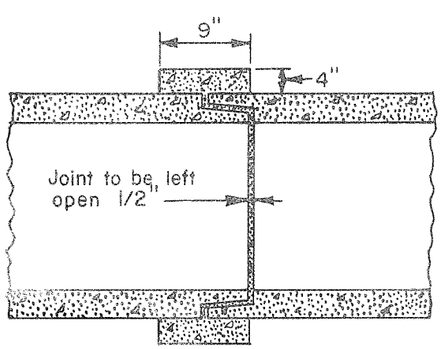

CONCRETE OR MORTAR PIPE JOINT

Where the flow line grade of the pipe is 10% or greater, all pipe shall be the Bell and Spigot type or shall be Tongue and Groove pipe with concrete collars as detailed or a type approved in writing by the Engineer.

REINFORCED CONCRETE PIPE CULVERTS

COMBINATIONS OF FILL HEIGHT-PROJECTION RATIO-BEDDING-CLASS

CLASS OF PIPE / BEDDING / PROJECTION RATIO / NOMINAL DIA.	HEIGHT OF COVER (FEET)															
	CLASS II				CLASS III				CLASS IV				CLASS V			
	Class B		Class C		Class B		Class C		Class B		Class C		Class B		Class C	
	0.7	0.0	0.7	0.0	0.7	0.0	0.7	0.0	0.7	0.0	0.7	0.0	0.7	0.0	0.7	0.0
18"	12	15	10	13	16	21	14	17	24	31	21	27	32	39	25	34
24"	12	15	10	13	16	21	14	17	24	31	21	27	32	39	25	34
30"	12	15	10	13	16	21	14	17	25	31	21	27	32	39	25	34
36"	12	15	10	13	16	21	14	17	25	31	21	27	32	39	25	34
42"	12	15	10	13	16	21	14	17	25	31	21	27	32	39	25	34
48"	12	15	10	13	16	21	14	17	25	31	21	27	32	39	25	34
54"	12	15	10	13	16	21	14	17	25	31	21	27	32	39	25	34
60"	12	15	10	13	16	21	14	17	25	31	21	27	32	39	25	34
66"	12	15	10	13	16	21	14	17	25	31	21	27	32	39	25	34
72"	12	15	11	13	17	21	14	17	25	31	21	27	32	39	25	34
78"	13	15	11	13	17	21	14	17	25	31	21	27	32	39	25	34
84"	13	15	11	13	17	21	14	17	25	31	21	27	32	39	25	34

Minimum cover for unpaved or flexible paved roadways shall be 1.75 feet.

GENERAL NOTES

The height of cover for each culvert shall determine the bedding and class of concrete pipe to be used (See Table herewith). Location, length and inside diameter of pipe required shall be shown on plans.

Class "B" bedding is to be used in solid rock.

When a projection ratio of 0.0 is used, backfilling shall be made with the materials that were excavated to produce the projection ratio. If material does not stand with a vertical face when attempting to produce a 0.0 projection ratio, the installation shall be classed as a 0.7 projection ratio.

Revisions

U.S. DEPARTMENT OF COMMERCE
BUREAU OF PUBLIC ROADS
REGION NO. 9 DENVER, COLORADO

STANDARD REINFORCED CONCRETE PIPE BEDDING DETAILS AND FILL—CLASS TABLES

STD. 109

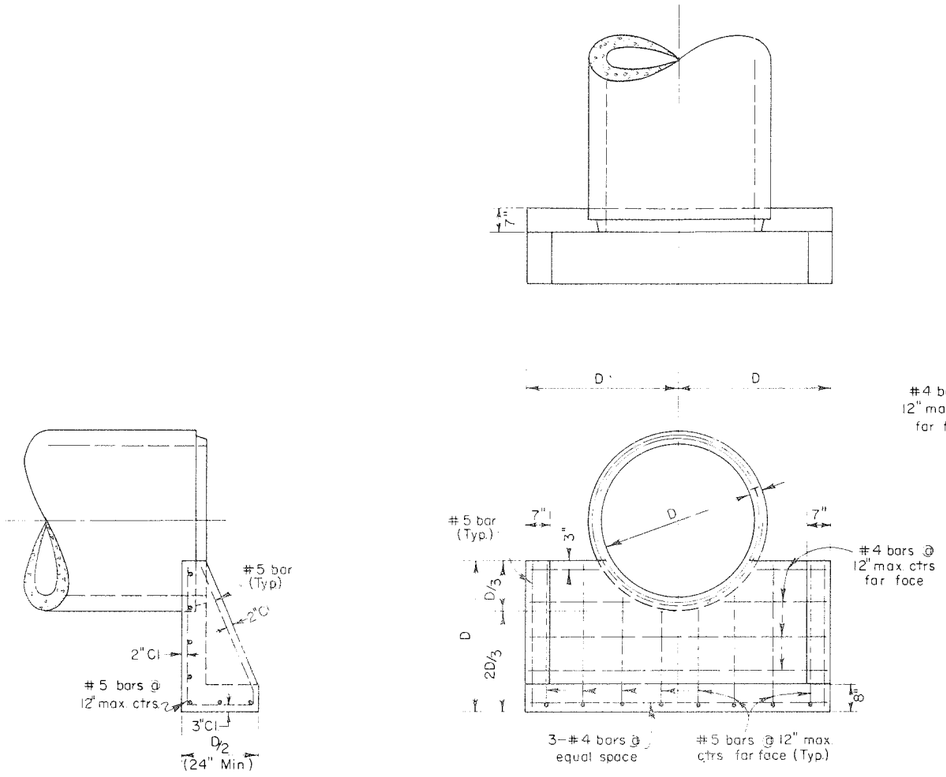

SINGLE PIPE INSTALLATION

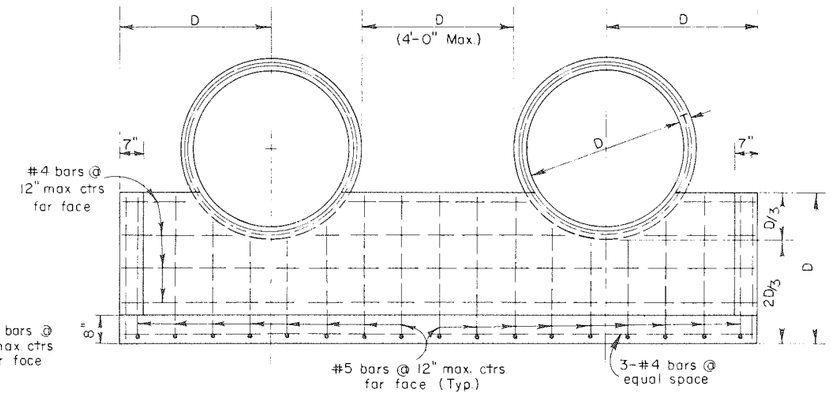

MULTIPLE PIPE INSTALLATION

ESTIMATED QUANTITIES FOR ONE CUTOFF WALL				
Pipe Diam	Single Pipe Class A Conc (Cu. Yds)	Single Pipe Reinf Steel (Lbs.)	Ea. Additional Pipe Class A Conc (Cu. Yds)	Ea. Additional Pipe Reinf Steel (Lbs.)
36"	0.61	55	0.61	55
42"	0.79	70	0.79	70
48"	0.99	85	0.99	85
54"	1.28	110	1.19	105
60"	1.60	130	1.42	125
66"	1.96	170	1.66	140
72"	2.36	185	1.92	155
78"	2.79	220	2.19	170
84"	3.25	250	2.48	185

GENERAL NOTES FOR CUTOFF WALLS

Specifications: Bureau of Public Roads FP-61.

Concrete: All concrete shall be Class "A" using Type II (low alkali) Portland Cement with an air-entraining admixture. All exposed edges shall be chamfered 3/4" and all exposed surfaces shall have a "Rubbed Finish". Measurement and payment for all concrete shall be in accordance with Section 406 of the Specifications FP-61.

Reinforcement Steel: Bar reinforcement shall be deformed intermediate grade steel conforming to current A.S.T.M. Specifications A15. Reinforcement bars shall be included in the price paid for Class "A" concrete unless a specific quantity of reinforcement steel is shown for the structure on the summary sheet.

CUTOFF WALL DETAILS FOR REINFORCED CONCRETE PIPE CULVERTS

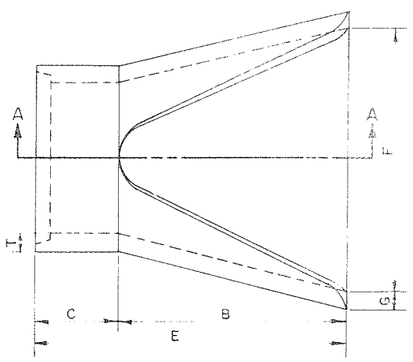

PLAN

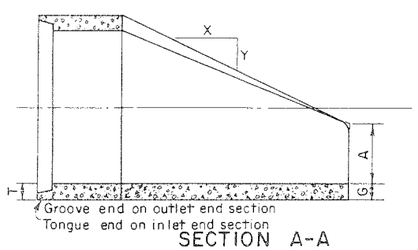

SECTION A-A

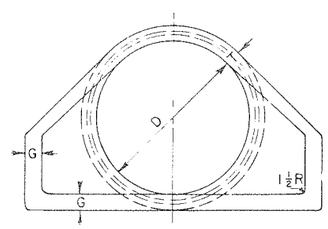

ELEVATION

REINFORCED CONCRETE END SECTIONS Dimensions in Inches								
Diam.	Slope X to Y	T	A	B	C	E	F	G
12	3 to 1	2	4	24	48 7/8	72 7/8	24	2
15	3 to 1	2 1/4	6	27	46	73	30	2 1/4
18	3 to 1	2 1/2	9	27	46	73	36	2 1/2
21	3 to 1	2 3/4	9	36	37 1/2	73 1/2	42	2 3/4
24	3 to 1	3	9 1/2	43 1/2	30	73 1/2	48	3
27	3 to 1	3 1/4	10 1/2	49 1/2	24	73 1/2	54	3 1/4
30	3 to 1	3 1/2	12	54	19 3/4	73 3/4	60	3 1/2
36	3 to 1	4	15	63	34 3/4	97 3/4	72	4
42	3 to 1	4 1/2	21	63	35	98	78	4 1/2
48	3 to 1	5	24	72	26	98	84	5
54	2.4 to 1	5 1/2	27	65	33 1/4	98 1/4	90	5 1/2
60	2 to 1	6	35	60	39	99	96	5
66	1.65 to 1	6 1/2	30	72	27	99	102	5 1/2
72	1.86 to 1	7	36	78	21	99	108	6
84	1.5 to 1	8	36	90 1/2	21	111 1/2	120	6 1/2

GENERAL NOTES FOR REINFORCED CONCRETE PIPE CULVERT END SECTIONS

Typical end section installation in cut sections shall be as shown on Standard Sheet 108.

End section design shall conform to standard reinforced concrete pipe.

REINFORCED CONCRETE END SECTION FOR PIPE CULVERTS

U.S. DEPARTMENT OF COMMERCE
BUREAU OF PUBLIC ROADS
REGION NO. 9 DENVER, COLORADO

STANDARD REINFORCED CONCRETE END SECTIONS AND CUTOFF WALLS FOR CONCRETE PIPE CULVERTS

STD. 110

Revisions

DIMENSIONS & QUANTITIES FOR TYPE "A" & TYPE "B" CONCRETE HEADWALLS

SINGLE PIPE INSTALLATION

PIPE DIA. "D" inches	"H" Ft-In.	SQUARE HEADWALL "A" Ft-In.	"L" Ft-In.	"S" Ft-In.	Headwall Conc. Cu.Yd.	Headwall Reinf. Lb.	Slope Paving Conc. Cu.Yd.	Slope Paving Reinf. Lb.	15° SKEW "A" Ft-In.	"L" Ft-In.	"S" Ft-In.	Headwall Conc. Cu.Yd.	Headwall Reinf. Lb.	Slope Paving Conc. Cu.Yd.	Slope Paving Reinf. Lb.
48	5-0	4-0	8-0	7-2½	1.25	193	0.77	19	4-1¾	8-3½	7-5⅝	1.29	200	0.79	20
54	5-3	4-7½	9-3	7-8	1.50	233	0.92	24	4-9½	9-7	7-11¼	1.56	242	0.95	25
60	5-6	5-3	10-6	8-1⅜	1.78	276	1.08	28	5-5¼	10-10½	8-4¾	1.84	286	1.11	29
66	5-9	5-10½	11-9	8-6¾	2.06	322	1.24	33	6-1	12-2	8-10⅜	2.13	333	1.29	34
72	6-0	6-6	13-0	9-0¼	2.37	369	1.42	39	6-8¾	13-5½	9-4	2.45	382	1.47	40
78	6-3	7-1½	14-3	9-5⅝	2.68	420	1.62	44	7-4½	14-9	9-9⅝	2.77	435	1.67	46
84	6-6	7-9	15-6	9-11	3.02	473	1.81	50	8-0¼	16-0½	10-3¼	3.13	490	1.88	52
90	6-9	8-4½	16-9	10-4⅜	3.37	529	2.02	56	8-8	17-4	10-9¾	3.49	548	2.08	58
96	7-0	9-0	18-0	10-9⅞	3.74	587	2.23	63	9-3¾	18-7½	11-2⅜	3.87	608	2.31	65
102	7-3	9-7½	19-3	11-3¼	4.12	648	2.46	70	9-11⅝	19-11¼	11-8	4.27	671	2.55	72
108	7-6	10-3	20-6	11-8⅝	4.52	712	2.69	77	10-7⅜	21-2¾	12-1⅝	4.68	737	2.78	80
114	7-9	10-10½	21-9	12-2	4.93	778	2.94	84	11-3⅛	22-6¼	12-7¼	5.10	805	3.04	87
120	8-0	11-6	23-0	12-7½	5.36	846	3.20	92	11-10⅞	23-9¾	13-0¾	5.55	876	3.31	95
126	8-3	12-1½	24-3	13-0⅞	5.81	918	3.46	100	12-6⅝	25-1¼	13-6⅜	6.02	950	3.58	104
132	8-6	12-9	25-6	13-6¼	6.27	991	3.74	109	13-2⅜	26-4¾	14-0	6.49	1026	3.87	113
138	8-9	13-4½	26-9	13-11¾	6.75	1068	4.02	118	13-10⅛	27-8¼	14-5⅝	6.99	1106	4.17	122
144	9-0	14-0	28-0	14-5⅛	7.24	1146	4.32	127	14-5⅞	28-11¾	14-11¼	7.50	1186	4.47	131
150	9-3	14-7½	29-3	14-10½	7.75	1228	4.62	136	15-1¾	30-3½	15-4¾	8.02	1271	4.78	141
156	9-6	15-3	30-6	15-3⅞	8.27	1312	4.93	146	15-9½	31-7	15-10⅜	8.56	1358	5.10	151
162	9-9	15-10½	31-9	15-9⅜	8.81	1399	5.26	156	16-5¼	32-10½	16-4	9.12	1448	5.44	162
168	10-0	16-6	33-0	16-2¾	9.37	1486	5.58	167	17-1	34-2	16-9⅝	9.70	1541	5.78	173
174	10-3	17-1½	34-3	16-8⅛	9.94	1580	5.93	177	17-8¾	35-5½	17-3¼	10.29	1636	6.13	183
180	10-6	17-9	35-6	17-1½	10.53	1674	6.27	188	18-4½	36-9	17-8¾	10.90	1733	6.49	195

PIPE DIA. "D" inches	30° SKEW "A" Ft-In.	"L" Ft-In.	"S" Ft-In.	Headwall Conc. Cu.Yd.	Headwall Reinf. Lb.	Slope Paving Conc. Cu.Yd.	Slope Paving Reinf. Lb.	45° SKEW "A" Ft-In.	"L" Ft-In.	"S" Ft-In.	Headwall Conc. Cu.Yd.	Headwall Reinf. Lb.	Slope Paving Conc. Cu.Yd.	Slope Paving Reinf. Lb.
48	4-7½	9-3	8-3⅞	1.44	223	0.89	23	5-7⅞	11-3¾	10-2⅜	1.77	273	1.08	28
54	5-5⅝	10-9¼	8-11¼	1.75	270	1.07	28	6-6½	13-1	10-10⅛	2.13	331	1.29	34
60	6-0¾	12-1½	9-4⅜	2.06	319	1.24	32	7-5⅛	14-10¼	11-5¾	2.52	390	1.53	40
66	6-9⅞	13-6¾	9-10⅝	2.38	372	1.43	38	8-3¾	16-7½	12-1⅜	2.91	455	1.76	47
72	7-6⅛	15-0¼	10-4⅞	2.74	426	1.64	45	9-2¼	18-4½	12-9	3.35	522	2.01	55
78	8-2¾	16-5½	10-11⅛	3.09	485	1.87	51	10-0⅞	20-1¾	13-4⅝	3.79	594	2.28	62
84	8-11⅜	17-10¾	11-5⅞	3.49	546	2.09	58	10-11½	21-11	14-0¼	4.27	669	2.56	71
90	9-8	19-4	11-11⅝	3.89	611	2.32	65	11-10⅛	23-8¼	14-8	4.77	748	2.85	79
96	10-4¾	20-9½	12-5⅞	4.32	678	2.57	73	12-8¾	25-5½	15-2⅝	5.29	830	3.16	89
102	11-1⅜	22-2¾	13-0⅛	4.76	748	2.84	81	13-7⅜	27-2¾	15-11¼	5.83	916	3.47	99
108	11-10	23-8	13-6⅜	5.22	822	3.11	89	14-6	29-0	16-6⅞	6.39	1007	3.81	109
114	12-6¾	25-1½	14-0⅝	5.69	898	3.40	97	15-4½	30-9	17-2½	6.97	1100	4.16	119
120	13-3⅜	26-6¾	14-6⅞	6.19	977	3.69	106	16-3⅛	32-6¼	17-10¼	7.58	1196	4.52	130
126	14-0	28-0	15-1⅛	6.71	1060	3.99	115	17-1¾	34-3½	18-5⅞	8.22	1298	4.89	141
132	14-8⅝	29-5¼	15-7⅜	7.24	1144	4.31	126	18-0⅜	36-0¾	19-1½	8.87	1401	5.29	154
138	15-5⅜	30-10¾	16-1⅝	7.79	1233	4.64	136	18-11	37-10	19-9⅛	9.55	1510	5.69	167
144	16-2	32-4	16-7⅞	8.36	1323	4.99	147	19-9⅝	39-7¼	20-4¾	10.24	1621	6.11	180
150	16-10⅝	33-9¼	17-2⅛	8.95	1418	5.33	157	20-8¼	41-4½	21-0½	10.96	1737	6.52	192
156	17-7¼	35-2½	17-8⅜	9.55	1515	5.69	169	21-6¾	43-1½	21-8⅛	11.70	1855	6.97	206
162	18-4	36-8	18-2⅝	10.17	1615	6.07	180	22-5⅜	44-10⅞	22-3¾	12.46	1978	7.44	221
168	19-0⅝	38-1¼	18-8⅞	10.82	1718	6.44	193	23-4	46-8	22-11⅞	13.25	2104	7.89	236
174	19-9¼	39-6½	19-3⅛	11.48	1824	6.84	204	24-2⅝	48-5¼	23-7	14.06	2234	8.38	250
180	20-6	41-0	19-9⅜	12.16	1933	7.25	217	25-1¼	50-2½	24-2¾	14.89	2367	8.87	266

DOUBLE PIPE INSTALLATION

PIPE DIA. "D" inches	SQUARE HEADWALL "B" Ft-In.	"L" Ft-In.	Headwall Conc. Cu.Yd.	Headwall Reinf. Lb.	Slope Paving Conc. Cu.Yd.	Slope Paving Reinf. Lb.	15° SKEW "B" Ft-In.	"L" Ft-In.	Headwall Conc. Cu.Yd.	Headwall Reinf. Lb.	Slope Paving Conc. Cu.Yd.	Slope Paving Reinf. Lb.
48	6-0	14-0	2.13	331	1.33	33	6-2½	14-6	2.20	343	1.38	34
54	6-9	16-0	2.52	393	1.57	39	6-11⅞	16-6¾	2.61	407	1.62	41
60	7-6	18-0	2.94	459	1.82	46	7-9⅛	18-7⅝	3.04	475	1.87	48
66	8-3	20-0	3.38	529	2.08	54	8-6½	20-8½	3.50	548	2.15	56
72	9-0	22-0	3.84	602	2.36	62	9-3¾	22-9¼	3.98	623	2.44	64
78	9-9	24-0	4.33	679	2.65	70	10-1⅛	24-10⅛	4.48	703	2.75	72
84	10-6	26-0	4.83	760	2.95	79	10-10½	26-11	5.00	787	3.06	82
90	11-3	28-0	5.36	844	3.27	88	11-7¾	28-11¾	5.55	874	3.39	91
96	12-0	30-0	5.92	932	3.60	98	12-5⅛	31-0⅝	6.13	965	3.73	101
102	12-6	31-9	6.42	1013	3.91	107	12-11¼	32-10½	6.65	1049	4.05	111
108	13-0	33-6	6.95	1097	4.23	117	13-5½	34-8¼	7.20	1136	4.38	121
114	13-6	35-3	7.49	1184	4.56	127	13-11¾	36-6	7.75	1226	4.72	131
120	14-0	37-0	8.05	1273	4.89	137	14-5⅞	38-3⅝	8.33	1318	5.06	142
126	14-6	38-9	8.63	1366	5.24	147	15-0⅛	40-1⅜	8.93	1414	5.43	152
132	15-0	40-6	9.23	1461	5.60	158	15-6⅜	41-11⅛	9.56	1513	5.80	164
138	15-6	42-3	9.85	1559	5.98	169	16-0⅝	43-8⅞	10.20	1614	6.19	175
144	16-0	44-0	10.48	1660	6.36	181	16-6¾	45-6½	10.85	1719	6.58	187
150	16-6	45-9	11.13	1764	6.76	193	17-1	47-4½	11.52	1826	6.99	200
156	17-0	47-6	11.80	1871	7.15	205	17-7¼	49-2¼	12.22	1937	7.40	212
162	17-6	49-3	12.48	1981	7.57	218	18-1⅜	50-11⅞	12.92	2051	7.84	226
168	18-0	51-0	13.19	2093	8.00	231	18-7⅝	52-9⅝	13.66	2167	8.28	239
174	18-6	52-9	13.91	2210	8.43	244	19-1⅞	54-7⅜	14.40	2288	8.73	253
180	19-0	54-6	14.65	2328	8.88	258	19-8	56-5	15.17	2410	9.19	267

PIPE DIA. "D" inches	30° SKEW "B" Ft-In.	"L" Ft-In.	Headwall Conc. Cu.Yd.	Headwall Reinf. Lb.	Slope Paving Conc. Cu.Yd.	Slope Paving Reinf. Lb.	45° SKEW "B" Ft-In.	"L" Ft-In.	Headwall Conc. Cu.Yd.	Headwall Reinf. Lb.	Slope Paving Conc. Cu.Yd.	Slope Paving Reinf. Lb.
48	6-11⅛	16-2⅛	2.46	382	1.54	38	8-5⅞	19-9⅝	3.01	468	1.88	47
54	7-9½	18-6¾	2.91	454	1.81	45	9-6½	22-7½	3.57	556	2.21	56
60	8-7⅞	20-9⅜	3.39	530	2.09	53	10-7¼	25-5½	4.16	649	2.57	65
66	9-6⅜	23-1⅛	3.90	611	2.41	62	11-6	28-3½	4.78	748	2.95	76
72	10-4¾	25-5	4.43	695	2.73	72	12-8¾	31-1¼	5.43	851	3.34	88
78	11-3⅛	27-8⅝	5.00	784	3.06	81	13-9½	33-11¼	6.12	960	3.75	99
84	12-1½	30-0¼	5.58	878	3.41	91	14-10¼	36-9¼	6.83	1075	4.17	112
90	12-11⅞	32-3⅞	6.19	975	3.77	102	15-10⅞	39-7⅛	7.58	1194	4.62	124
96	13-10¼	34-7¾	6.84	1076	4.16	113	16-11⅝	42-5⅛	8.37	1318	5.09	139
102	14-5¼	36-8	7.41	1170	4.51	124	17-8⅛	44-10⅞	9.08	1483	5.53	151
108	15-0⅛	38-8⅛	8.03	1267	4.88	135	18-4⅝	47-4⅝	9.83	1551	5.98	165
114	15-7	40-8½	8.65	1367	5.26	147	19-1⅛	49-10⅛	10.59	1674	6.44	180
120	16-2	42-8¾	9.30	1470	5.65	158	19-9⅝	52-3⅞	11.38	1800	6.92	194
126	16-6⅞	44-8⅞	9.97	1577	6.05	170	20-6⅛	54-9⅝	12.20	1932	7.42	208
132	17-3⅞	46-9⅛	10.66	1687	6.47	182	21-2½	57-3¼	13.05	2066	7.92	223
138	17-10¾	48-9½	11.37	1800	6.91	195	21-11	59-9	13.93	2205	8.46	239
144	18-5¾	50-9¾	12.10	1917	7.34	209	22-7½	62-2¾	14.82	2349	8.99	256
150	19-0⅞	52-9⅞	12.85	2037	7.80	223	23-4	64-8⅛	15.74	2495	9.56	273
156	19-7½	54-10	13.63	2160	8.26	237	24-0½	67-2	16.69	2646	10.12	290
162	20-2½	56-10½	14.41	2287	8.75	252	24-9	69-7¾	17.65	2802	10.71	308
168	20-9⅜	58-10⅞	15.23	2417	9.24	267	25-5½	72-1½	18.65	2960	11.32	327
174	21-4⅜	60-10⅞	16.06	2552	9.73	282	26-2	74-7¼	19.67	3125	11.92	345
180	21-11¼	62-11¼	16.92	2688	10.25	298	26-10½	77-1	20.72	3292	12.56	365

NOTE: Dimensions "A" & "S" are the same for single or multiple installations of the same diameter and skew. For installations involving more than two pipes, increase the dimension "L" and all quantities shown for double pipe installation by adding a length equal to dimension "B" and the incremental change in quantities for each additional pipe.

NOTE: For skews other than those shown multiply quantities and dimensions "A", "B", "S" & "L" for square pipes by the secant of the skew angle. The dimension "S" and the quantities for Slope Paving are computed for a 1½:1 side slope. For a 2:1 side slope multiply the values shown by 1.24.

NOTE: Materials shall not be ordered until the Engineer has checked the length, skew angle, and slope bevel in the field.

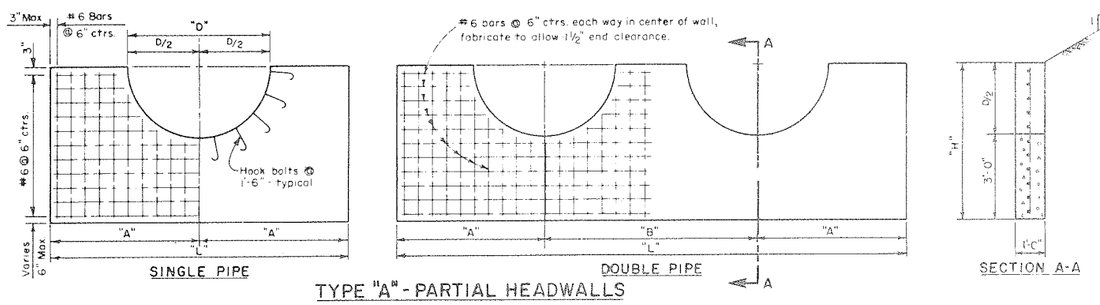

TYPE "A" - PARTIAL HEADWALLS

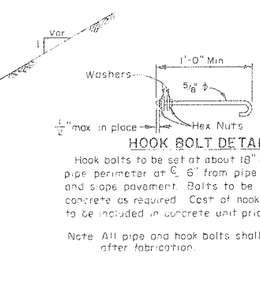

HOOK BOLT DETAIL

Hook bolts to be set at about 18" centers around pipe perimeter at ℄ 6" from pipe end of headwall and slope pavement. Bolts to be field bent into concrete as required. Cost of hook bolts in place to be included in concrete unit price.

Note: All pipe and hook bolts shall be galvanized after fabrication.

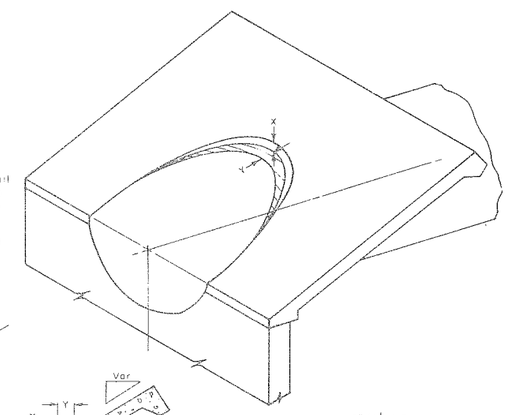

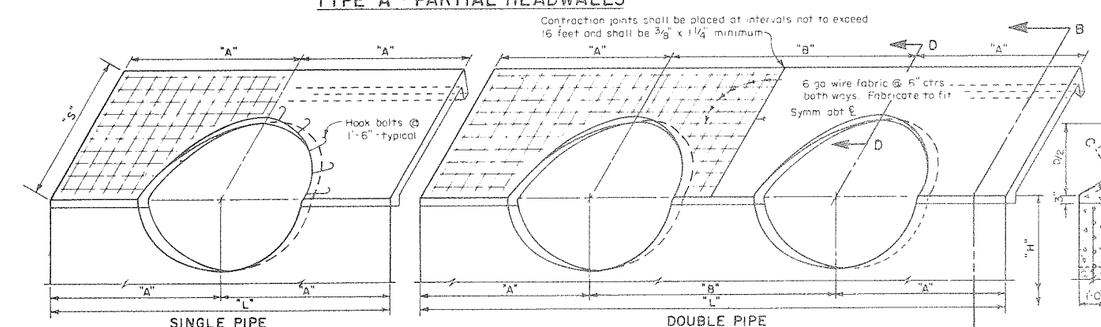

TYPE "B" - HEADWALLS WITH SLOPE PAVEMENT

(Headwall same as Type "A" except as shown)

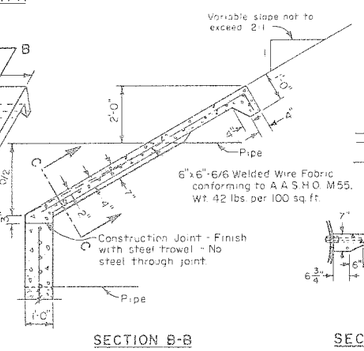

SECTION B-B

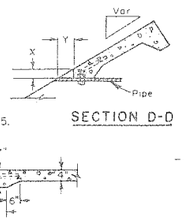

SECTION D-D

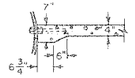

SECTION C-C

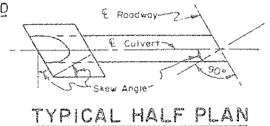

TYPICAL HALF PLAN

GENERAL NOTES

Specifications: Bureau of Public Roads, F.P. 61.

Concrete: All concrete shall be Class "A", using Type II (low alkali) Portland Cement with an air-entraining admixture. Concrete shall be poured monolithically. On headwalls all exposed edges shall be chamfered ¾ inch and all exposed surfaces shall have a "Rubbed Finish".

Slope paving shall conform, in general, to the Specifications, Section 330, Portland Cement Concrete Pavement, except that surface variations less than ⅜ inch, when tested in accordance with Article 330-3.13, will not require correction. Measurement and payment for all concrete shall be in accordance with Section 406 of the Specifications, F.P. 61.

Reinforcement Steel: Bar reinforcement shall be deformed intermediate grade steel conforming to current A.S.T.M. Specifications A15. Welded wire fabric shall conform to current A.S.T.M. Specifications A185. Reinforcement bars and wire fabric shall be included in the price paid for Class "A" concrete unless a specific quantity of reinforcement steel is shown for this structure on the summary sheet.

Headwalls: The dimensions shown on the plans are minimum depth unless rock is encountered at a shallower depth. Excavation and backfill shall be in accordance with Section 103 of the Specifications. Headwalls are not to be poured until pipe erection is complete.

Revisions: All revisions found necessary in the field must be approved by the Bridge Engineer.

U.S. DEPARTMENT OF COMMERCE
BUREAU OF PUBLIC ROADS
REGION NO. 9 DENVER, COLORADO

STANDARD TYPE "A" AND TYPE "B" CONCRETE HEADWALLS FOR METAL PIPE CULVERTS

Revisions 2/1/65

STD. 113

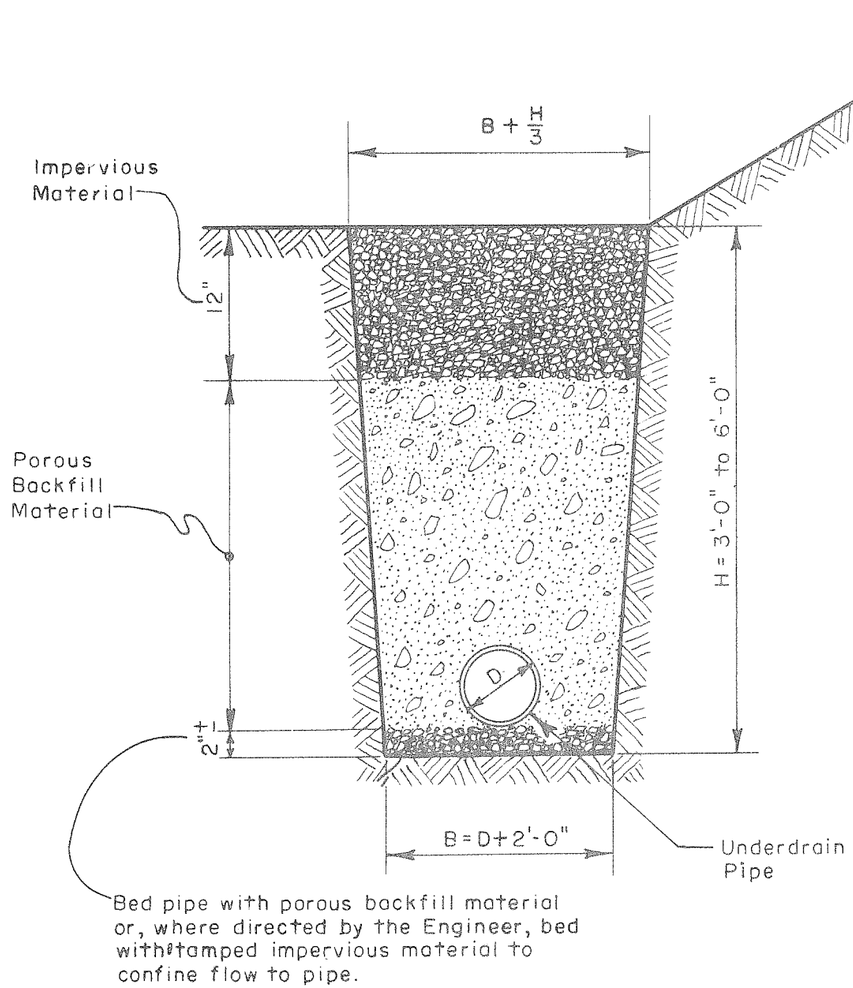

PIPE UNDERDRAIN

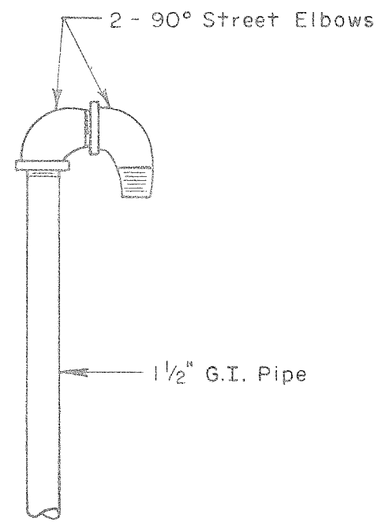

DETAIL OF BREATHER PIPE

GENERAL NOTES

SPECIFICATIONS: Current B.P.R. Standard Specifications.

MATERIAL: Porous granular backfill shall be clean, coarse sand and shall conform to the following gradation requirements:

Passing 3" Sieve 100%
Passing #4 Sieve..... 50% Min.

All porous material passing the #4 sieve shall conform to the following:

Passing #50 Sieve..... 10 - 30%
Passing #100 Sieve..... 0 - 10%
Passing #200 Sieve..... 0 - 2%

Impervious material shall contain sufficient granular material to be stable when wet and compacted in place.

CONSTRUCTION: When trench is under the roadbed, paved ditch, or other structure, the porous material shall completely fill the trench and the porous material shall be tamped into place. The material shall be dampened prior to placing if necessary to prevent segregation. If soft, mucky trench bottoms are encountered they shall be stabilized prior to placing bedding material by working granular material into the trench bottom.

The outfall end of underdrain pipe shall be covered with galvanized, No. 17 gage hardware cloth screen having approximately 1/2" x 1/2" mesh openings. The screen shall be held securely in place with standard coupling bands.

Revisions 9/1963

U.S. DEPARTMENT OF COMMERCE
BUREAU OF PUBLIC ROADS
REGION NO. 9 DENVER, COLORADO

STANDARD UNDERDRAIN

STD. 119

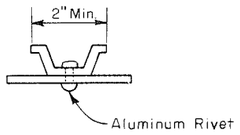

TOP VIEW

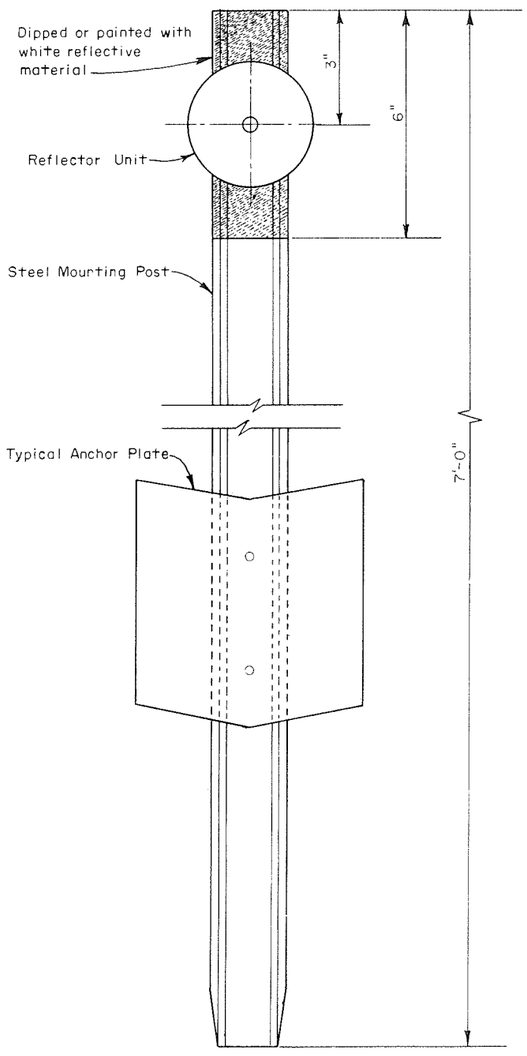

FRONT VIEW WITH ANCHOR PLATE

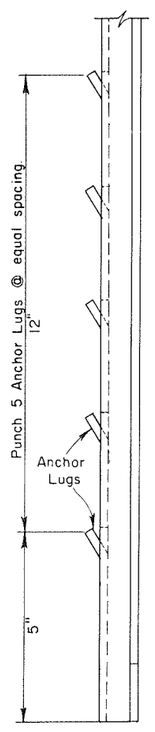

SIDE VIEW WITH ANCHOR LUGS

DELINEATOR
USE

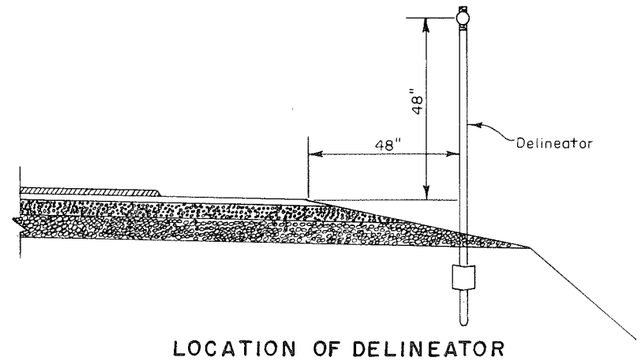

LOCATION OF DELINEATOR

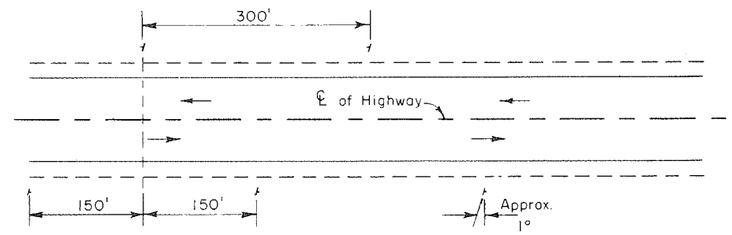

DELINEATOR INTERVAL ON TANGENTS

DELINEATOR INTERVAL
ON HORIZONTAL CURVES

DEGREE OF CURVE	SPACING ON CURVE	SPACING ON EACH END OF CURVE		
		FIRST SPACE	SECOND SPACE	THIRD SPACE
	FEET	FEET	FEET	FEET
1	152	200	200	200
2	106	191	200	200
3	86	155	200	200
4	74	133	200	200
5	66	119	198	200
7	55	99	165	200
9	48	86	144	200
12	41	74	123	200
15	36	65	108	200
18	33	59	99	198
21	30	54	90	180
25	28	50	84	168
30	24	43	72	144

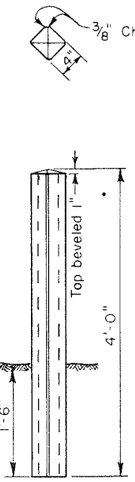

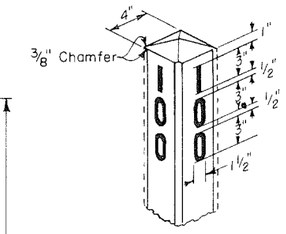

Die cast metal numbers 3" high on adjacent sides reading from top down and spaced as shown. Metal numbers to be non-rusting and black in color, 1/4" in thickness, 1/2" in width, and held by anchors in concrete.

Concrete to be Class "Y" B.P.R. Specifications except that an approved brand of white cement is to be used.

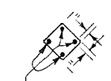

4 No. 3 bars 3'-9" long tied with No. 12 soft annealed iron wire.

CONCRETE MAINTENANCE
MARKER POST
USE

GENERAL NOTES

MATERIALS: The steel mounting posts shall weigh at least one pound per foot. The mounting posts shall be furnished with either type of anchor shown and shall have a black baked enamel finish which is resistant to the shock of driving operations.

The top portion of the mounting post shall be either surfaced with white paint containing white reflective glass beads or painted with white paint and covered with white reflective glass beads while the paint is wet.

The delineator reflector unit shall be a sealed acrylic plastic prismatic reflex lens having a minimum of six and one-half square inches of smooth reflective area. The lens shall be housed in an aluminum frame and provided with a single grommetted mounting hole.

Mounting posts shall be driven to the depth shown and shall be vertical and in accurate alinement. They shall be driven by the use of a regular post driver or protected by a driving cap if any means other than a post driver is used.

The reflector unit shall be securely fastened to the steel mounting post with an approved type aluminum rivet.

Revisions 8/1963

U.S. DEPARTMENT OF COMMERCE
BUREAU OF PUBLIC ROADS
REGION NO. 9 DENVER, COLORADO

STANDARD MAINTENANCE POSTS AND DELINEATORS

STD. 131

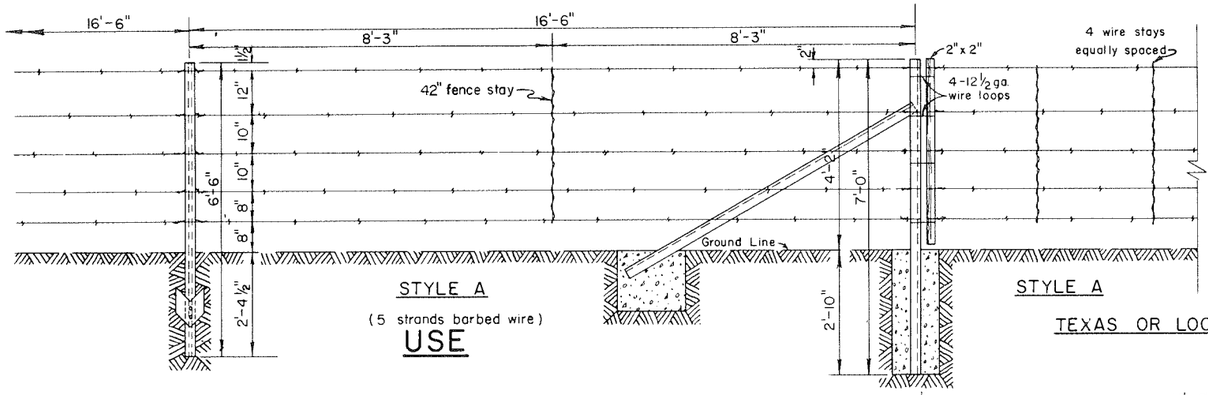

STYLE A

(5 strands barbed wire)

USE

STYLE A

TEXAS OR LOOSE WIRE GATES

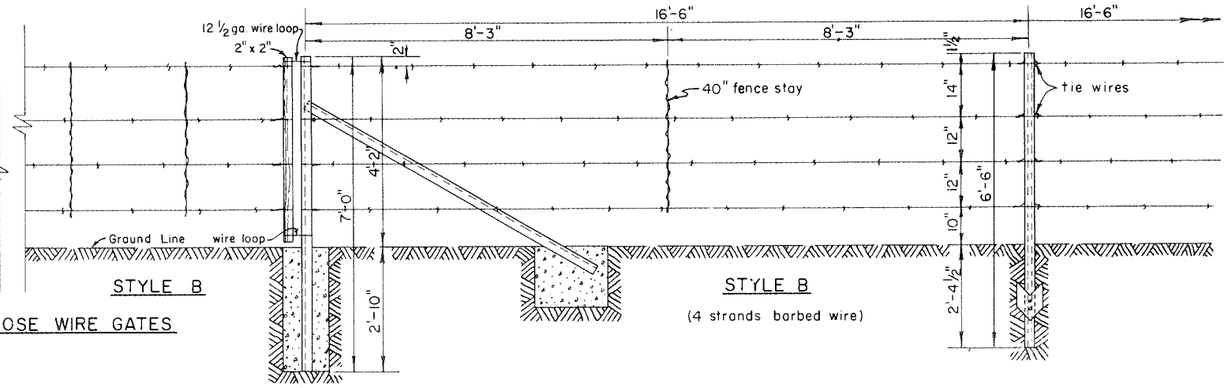

STYLE B

STYLE B

(4 strands barbed wire)

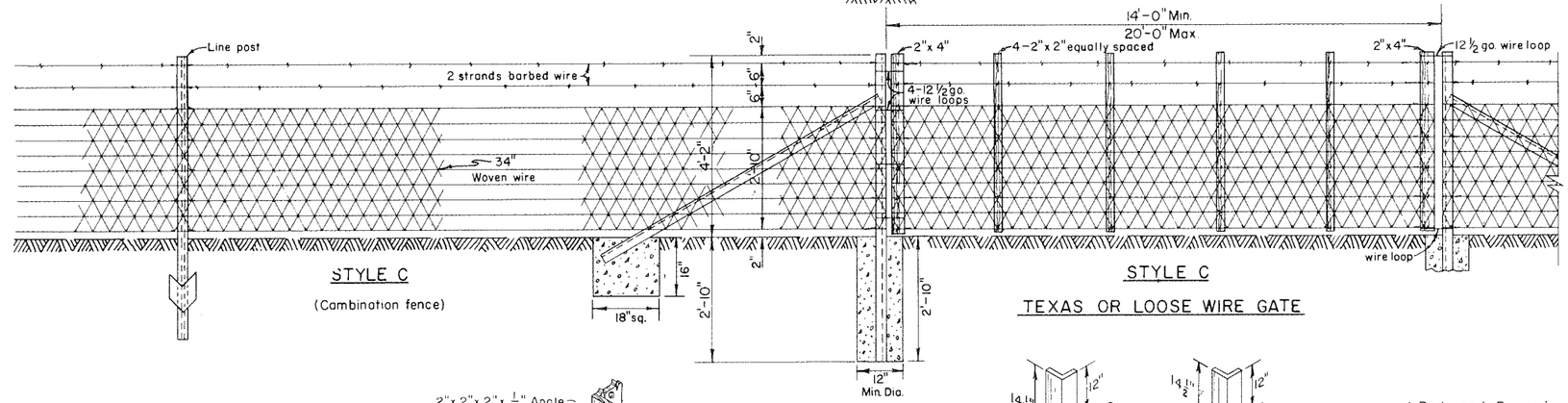

STYLE C

(Combination fence)

STYLE C

TEXAS OR LOOSE WIRE GATE

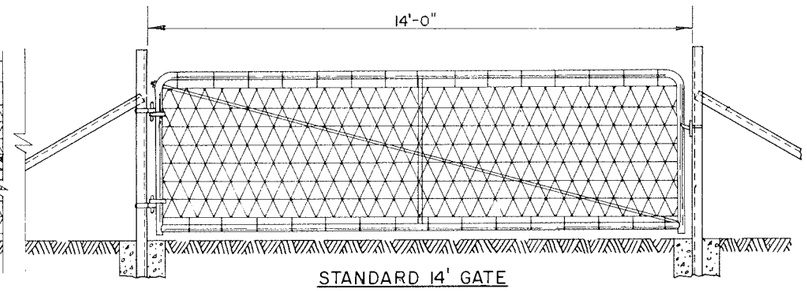

STANDARD 14' GATE

(For use with all styles fences)

USE

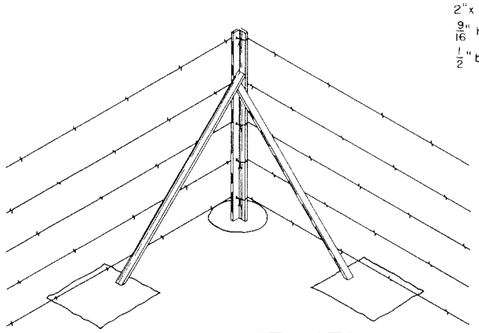

CORNER POST DETAIL

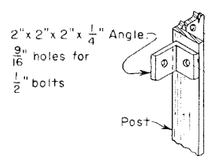

ALTERNATE INTERMEDIATE BRACE ATTACHMENT

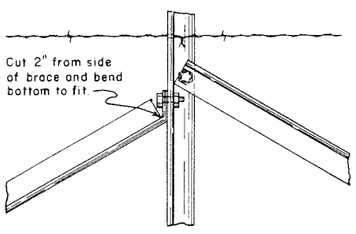

INTERMEDIATE BRACING

(See Alternate Attachment above)

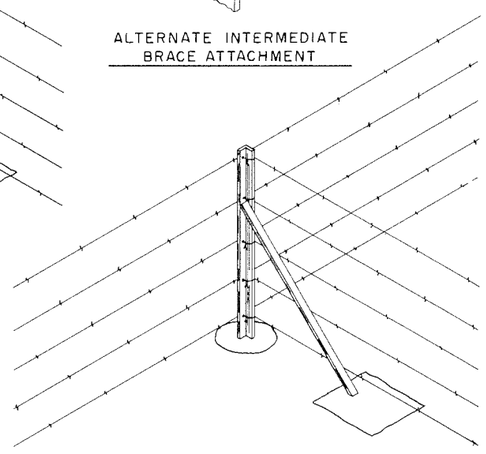

BRACE POST AT INTERSECTION

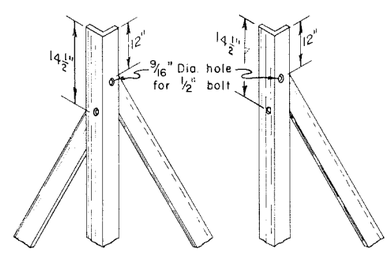

CORNER & INTERMEDIATE END & GATE

(Hole spacing for braces)

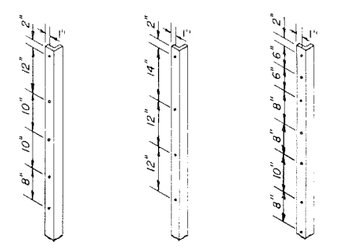

STYLE A STYLE B STYLE C

(Hole spacing for wire ties)

(All holes to be 9/16" Dia. & may be located on either leg.)

GENERAL NOTES

1. Posts and Braces: All corner, end, gate and intermediate brace posts shall be 2½" x 2½" x ¼" steel angle sections, 7'-0" long, weighing not less than 4.1 lbs per lin. ft. Braces shall be 2"x 2"x ¼" structural steel angles, 7'-0" long, weighing not less than 3.19 lbs per lin. ft. Line posts shall be steel "Tees", 6'-6" long, weighing not less than 1.3 lbs. per lin. ft., and shall have an anchor plate sufficient to resist movement. All posts and braces shall be drilled or punched as shown hereon, and shall be either hot dip galvanized or coated with a baked-on asphalt base enamel. Line posts with studded face will be acceptable in lieu of drilled or punched posts.
2. Brace Panels: All corner, end or gate posts shall be braced as detailed hereon. Corner posts, with braces, shall be placed at all changes in alinement or grade in excess of 20 degrees. Where the distance between corners or ends is in excess of ⅛ mile, intermediate brace panels shall be inserted at uniform intervals of not more than ⅛ mile.
3. Barbed Wire: Barbed wire shall conform to current ASTM Specification A-121, Class 1, and shall be 2 strands of 12½ gage galvanized wire, twisted, having 2 point, double wrap, 14 gage round barbs, maximum of 4" apart. Minimum net weight shall be 78 lbs. per 80-rod reel.
4. Woven Wire: Woven wire shall be 34" V-mesh, consisting of 9 horizontal cables approximately 4" apart, woven with cross wires 4" apart, to form a one piece fabric. Horizontal cables shall be 2 strands of 12½ gage galvanized wire, twisted, and the cross wires shall be single strand 14 gage galvanized wire. Minimum weight shall be 125 pounds per 10-rod reel.
5. Gates: Standard 14' gate shall be 42" high, consisting of a 1⅛" O.D. galvanized steel tubular frame, with woven wire filler as specified above, except that the cross wires may be either a 2" or 4" spacing. Gate shall have a diagonal adjustable sag-rod (or wire), and adjustable hinges. Latch shall be the self-engaging (pig-ear) type. All fittings shall be galvanized. Minimum weight of gate shall be 70 pounds, exclusive of fittings.
6. Miscellaneous: Fence stays shall be double strand, twisted, 9½ gage galvanized wire. Fence ties shall be a minimum of 12½ gage galvanized wire. Every strand of barbed wire, and every other strand of woven wire shall be tied to each post in accordance with standard practice. Bolts for attaching braces shall be ½" x 1" galvanized machine bolts.
7. Concrete: Concrete shall be class A, and shall be allowed to set not less than seven days before wire may be stretched.

Revisions 6/1964, 11/1964, 1/1965

U.S. DEPARTMENT OF COMMERCE
BUREAU OF PUBLIC ROADS
REGION NO. 9 DENVER, COLORADO

STANDARD WIRE FENCES WITH STEEL POSTS

TYPE 3

STD. 136

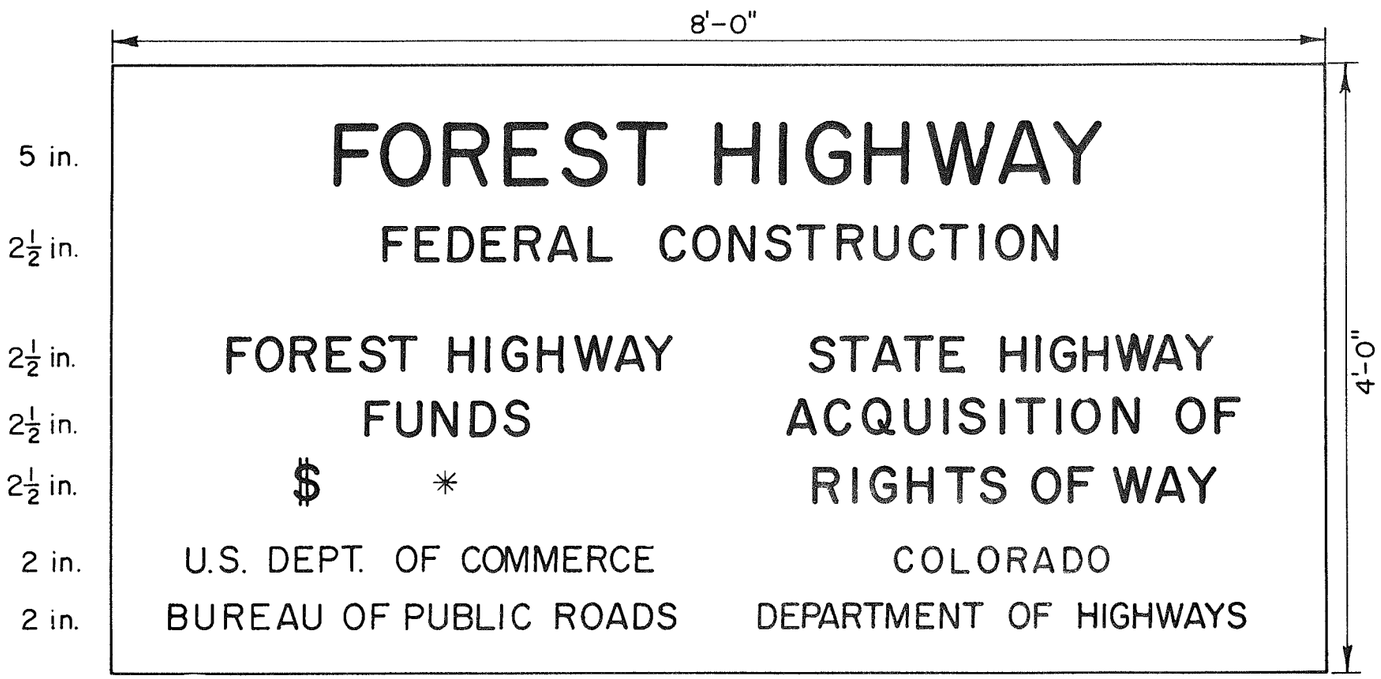

GENERAL NOTES

1. Two signs, of the type shown hereon; shall be furnished and installed by the contractor. One sign shall be placed at each end of the project, at locations determined by the engineer, consistent with the location of other construction signs.
2. The signs shall be erected immediately upon beginning construction operations, and shall remain in place until final acceptance of the project.
3. The sign material may be either wood or metal, at the option of the contractor, but shall have sufficient stability to last throughout the estimated period of use.
4. The signs shall be painted with black letters on a white background. Lettering shall be Series "C", as specified in the B.P.R. publication "Standard Alphabets for Highway Signs," in connection with the A.A.S.H.O. " Manual on Uniform Traffic Control Devices".

✳ 5. The amount for insertion in the " Funds" space will be determined by the engineer.

Revisions 6-1964

U.S. DEPARTMENT OF COMMERCE
BUREAU OF PUBLIC ROADS
REGION NO. 9 DENVER, COLORADO

PROJECT IDENTIFICATION SIGNS

STD. 143

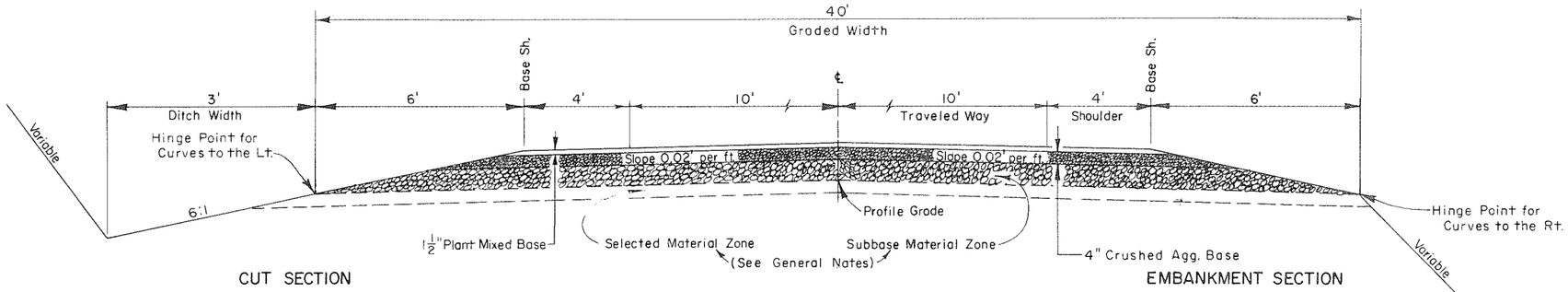

CUT SECTION

EMBANKMENT SECTION

TYPICAL SECTION ON TANGENTS

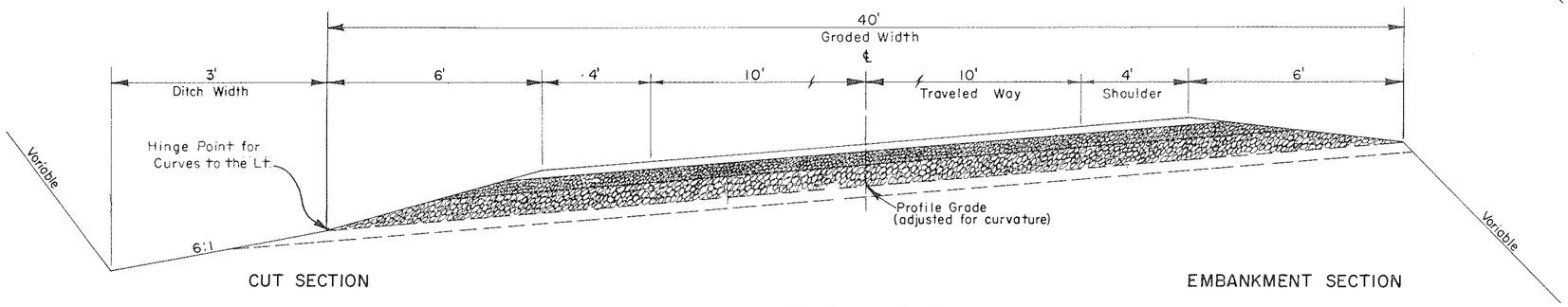

CUT SECTION

EMBANKMENT SECTION

TYPICAL SECTION FOR CURVES LT.
(MAXIMUM SUPERELEVATION)

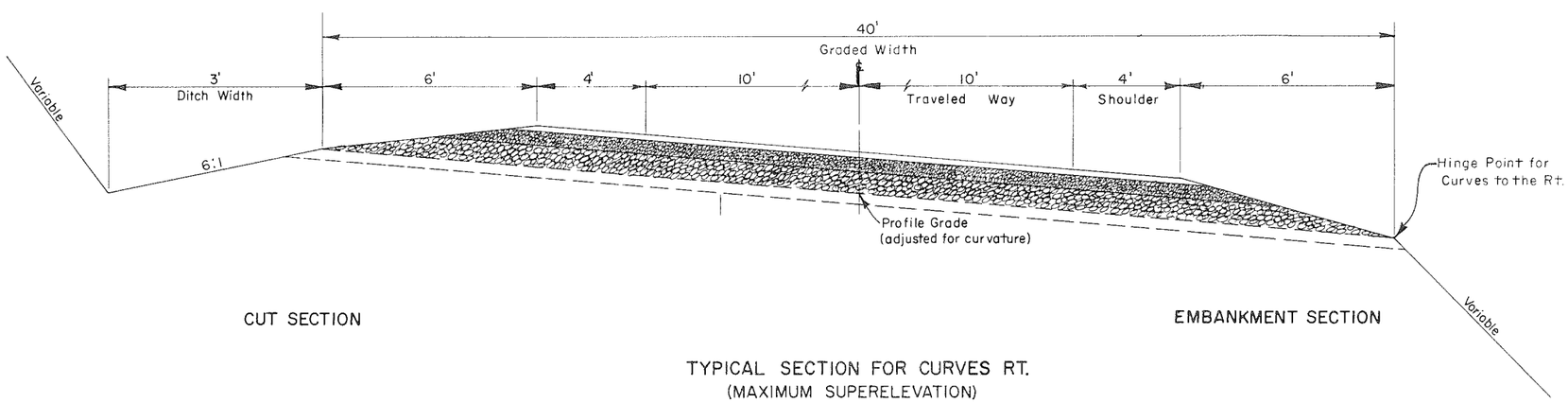

CUT SECTION

EMBANKMENT SECTION

TYPICAL SECTION FOR CURVES RT.
(MAXIMUM SUPERELEVATION)

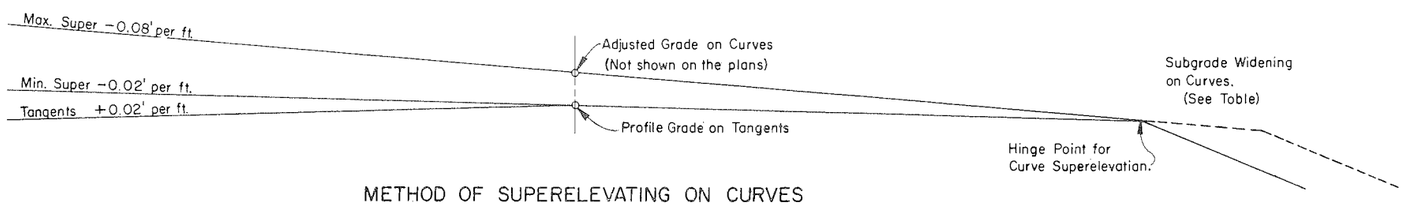

METHOD OF SUPERELEVATING ON CURVES

HEIGHT	EMBANKMENT SLOPE
0' to 3'	6:1
3' to 6'	4:1
6' to 12'	2:1
12' and up	2:1

HEIGHT	CUT SLOPE
0' to 5'	3:1
5' to 10'	2:1
10' and up	1½:1

The above tables are to be used as a guide in the design and construction of the project. The designer or field engineer may vary from these to fit existing conditions.

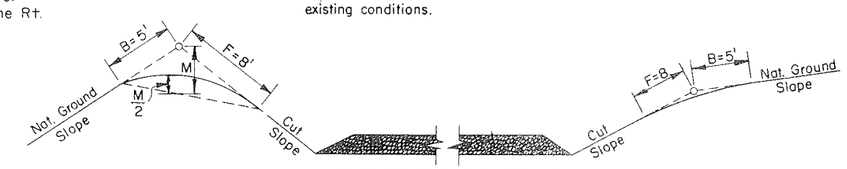

CUT SLOPE ROUNDING

When the cut slope is less than 8', reduce B & F distance to the actual slope distance.

Slope Rounding shall be considered as a subsidiary part of the work required in dressing the cut slopes and no allowance will be made for materials moved.

Rounding, Warping, and Finishing slopes shall be as provided in Standard Specifications and/or Special Provisions.

STABILIZING MATERIALS

	STATION TO STATION		Subbase Material Zone		Selected Material Zone	
			Item	Depth	Item	Depth
(IN PLACE)	1412+00	1482+00	104(2)	6"	–	–
	1482+00	1534+50	104(2)	6"	104(2)	3"
	1534+50	1603+00	104(2)	6"	–	–
	1603+00	1764+50	104(2)	6"	104(2)	3"

GENERAL NOTES

The Typical Section and the table above show a "Selected Material Zone" and a "Subbase Material Zone." These terms are for defining locations and depths of materials only, and are not to be considered as pay items having similar names. The "Selected Material Zone" lies below the profile grade (adjusted for curvature where appropriate). The "Subbase Material Zone" lies above the profile grade and just below the base course zone.

Where the plans show special material to be placed in the "Selected Material Zone," the roadway excavations and embankments shall be constructed to the grade that will allow for the required thickness. The thicknesses of materials shown in the above table are based on laboratory analysis of samples taken at random along the proposed construction. During construction, the engineer will adjust the thicknesses as necessary to insure adequate structural stability, including the placing of Section 104 materials in the "Selected Material Zone", and the placing of Section 102 materials in the "Subbase Material Zone." Section 102 materials will not be placed on top of Section 104 materials.

On grades of 3% or less, where wet or unstable conditions exist, the engineer may increase the ditch width 3 feet or more.

Any subsurface data represented on these plans is limited to the specific locations shown and those locations alone.

CURVE WIDENING*

Degree of Curve	Pavement Width 20'	22'	24'
5°– 10°	2'	–	–
11°– 21°	3'	2'	–
22° & Up	4'	3'	2'

* Widen Subgrade, Base and Surfacing.

Revisions 7/1963

U.S. DEPARTMENT OF COMMERCE
BUREAU OF PUBLIC ROADS
REGION NO. 9 DENVER, COLORADO

TYPICAL CROSS SECTIONS

NATIONAL FOREST HIGHWAYS

ROUTE: Dolores–Rico
PROJECT: I-2(3), Grading & Bit. Stab. Base
NATIONAL FOREST: San Juan
COUNTIES: Montezuma & Dolores
STATE: Colorado

ROADBED WIDTHS
GRADED: 40' SH. to SH.
BASE: 28' SH to SH.
SURFACE: ____ SH to SH.

SUMMARY OF ESTIMATED QUANTITIES

The following quantities are approximate. Payment will be made only for the quantities of work performed or materials furnished in accordance with the contract.

SUMMARY OF QUANTITIES

ITEM Nº	106	102(1)					102(9)	104(2)	105(2)	107(1)	108(1)	109(1)	200(4)	217(1)	217(2)	310(4)	313(12)	590(2)
STATION TO STATION	Embankment Prism	Unclassified Excavation: Prism	Subgrade	Stripping and Storing Topsoil	Channel Changes	Overbreak and Slides	Furrow Ditches	Special Subbase, Grading B-1	Yard Mile Overhaul	Finishing Previously Constructed Roadbed	Watering	Rolling	Crushed Aggregate Base, Grading E	Plant-Mixed Base	Asphalt Cement, 120-150 Penetra., Plant-Mixed Base	Asphalt, Grade MC-0 or 1, Prime Coat	Emulsified Asphalt, Grade SS-1, Seal Coat	Placing Topsoil
	Cu. Yd.	Cu. Yd.	Cu. Yd.	Cu. Yd.	Cu. Yd.	Cu. Yd.	Lin. Ft.	Ton	Yd.-Mi.	Mile	Unit	Hour	Ton	Ton	Ton	Ton	Ton	Cu. Yd.
1603+00 to 1634+36	16,852	18,537	510	2,000					9									
1634+36 to 1636+07	1,675	1,843																
1636+07 to 1710+43	86,676	91,523	17,281	1,500		Estimated 3,000	443		12,853									
1710+43 to 1727+74	13,406	14,725	20		3,500		257											
1727+74 to 1764+50	50,120	53,428			2,500		1,300		246									
Subtotals	168,729	180,056	17,811	3,500	6,000	3,000												
Approach Roads*																		
1604+00 Lt.																		
1604+00 Rt.																		
1609+00 Lt.																		
1609+00 Rt.																		
1635+50 Lt.																		
1703+75 Rt.																		
1712+00 Lt.																		
1759+50 Rt.																		
Irrigation Ditch*																		
1628+00 to 1636+00 Rt.																		
*Quantities are included in Prism.																		
Summary of Unclassified Excavation																		
Prism		180,056																
Subgrade		17,811																
Stripping and storing topsoil		3,500																
Channel changes		6,000																
Overbreak and slides		3,000																
Culvert inlets and outlets		175																
Total		210,542																
Length of Project	Base	Grading and Base	Bridge	Total														
1412+00 to 1477+21.26 Bk.	6,521.26																	
1478+73.82 Ah. to 1559+19.20 Bk.	8,045.38																	
1559+15.00 Ah. to 1566+67.00 Bk.	752.00																	
1566+65.00 Ah. to 1582+62.00 Bk.	1,597.00																	
1582+60.00 Ah. to 1603+00	2,040.00																	
1603+00 to 1618+31.82 Bk.		1,531.82																
1618+28.88 Ah. to 1639+70		2,141.12																
1639+70 to 1640+80			110.00															
1640+80 to 1641+46.24 Bk.		66.24																
1641+57.09 Ah. to 1675+83.75 Bk.		3,426.66																
1675+80.38 Ah. to 1705+71.00 Bk.		2,990.62																
1707+56.59 Ah. to 1723+98.44 Bk.		1,641.85																
1726+65.00 Ah. to 1735+48.27 Bk.		883.27																
1735+27.47 Ah. to 1764+50		2,922.53																
Total Feet	18,955.64	15,604.11	110.00	34,669.75														
Total Miles	3.590	2.955	0.021	6.566														

	Subbase				Base				Plant-Mixed Base			Prime		Seal	
	Length	Width	Sq. Ft.	Depth	Cu. Ft.	Width	Sq. Ft.	Depth	Cu. Ft.	Width	Sq. Ft.	Depth	Cu. Ft.	Width	Sq. Ft.
1412+00 to 1603+00 (Roadway)	18,956					30'	568,680	4"	189,560	28'	530,768	1.5"	66,346	28'	530,768	28'	530,768
1412+00 to 1603+00 (Shoulders)	18,956					2'	37,912	4"	12,637	1'	18,956	1.5"	2,370	6'	113,736	2'	37,912
1603+00 to 1764+50 (Roadway)	15,604	34'	530,536	9"	397,902	30'	468,120	4"	156,040	28'	436,912	1.5"	54,614	28'	436,912	28'	436,912
1603+00 to 1764+50 (Shoulders)	15,604	4'	62,416	9"	46,812	2'	31,208	4"	10,403	1'	15,604	1.5"	1,951	6'	93,624	2'	31,208
Approach Roads	variable	variable	4,000	9"	3,000	variable	18,000	4"	6,000	variable	18,000	1.5"	2,250	variable	18,000	variable	18,900
Widening for curbs (in cut)	950					10.5'	9,975	4"	3,325	10.5'	9,975	1.5"	1,247	7.5'	7,125	10.5'	9,975
Bituminous curbs	950												475				
Totals					447,714				377,965				129,253		1,200,165		1,065,675
Totals	168,729	210,542					2,000	31,340	13,108	3.590	3,962	1,438	25,891	9,565	541	160	37	3,500
Use	-	220,000					2,100	32,000	14,000	3.6	5,000	1,600	26,000	10,000	550	160	40	3,500

Sta. 1412+00 to 1603+00 = 3.590

447,714 x 110 = 31,340
2,000

168,729 x 0.015 = 2,531
31,340 x 0.025 = 783
25,891 x 0.025 = 647
3,962

168,729 ÷ 150 = 1,125
31,340 ÷ 100 = 313
1,438

377,965 x 137 = 45,891
2,000

129,253 x 148 = 9,565
2,000

9,565 x 0.06 = 541
1.06

1,200,165 x 0.3 = 160
9 x 250

1,065,675 x 0.075 = 37
9 x 240

Estimated 3,500

Project:

Stations: 1412+00 to 1764+50
Length: 6.566 miles (includes bridge as follows)
Bridge:
Station 1639+70 to 1640+80 (Dolores River Bridge)

Widths:
Grading: 40 feet
Base: 28 feet
Bridge: 32 feet

Special subbase, grading B-1, depth 9 inches, weight 140 lbs. per cu. ft.
Crushed aggregate base, grading E, depth 4 inches, weight 137 lbs. per cu. ft.
Plant-mixed base, depth 1.5 inches, weight 148 lbs. per cu. ft.
Asphalt cement, 120-150 penetration, plant-mixed base, 6.0 percent by weight
Asphalt, grade MC-0 or 1, prime coat, 0.3 gallon per sq. yd.
Emulsified asphalt, grade SS-1, seal coat, 0.075 gallon per sq. yd.

Type Code:

Roadway: 2013
Bridge: X021

SUMMARY OF QUANTITIES

Dolores-Rico ROUTE: 1
PROJECT: 1-2(3), Grading and Bit. Stab. Base
STATE: Colorado COUNTIES: Montezuma and Dolores
NATIONAL: Forest: San Juan

Sheet 1 of 2 Sheets

SUMMARY OF ESTIMATED QUANTITIES

The following quantities are approximate. Payment will be made only for the quantities of work performed or materials furnished in accordance with the contract.

SUMMARY OF STRUCTURE QUANTITIES

ITEM Nº	102(1)	103(1)	103(2)			406(1)		407(1)		422(2)	458(1)			458(2)	460(4)	515(1)	520(4)	520(7)	533(1)
STATION TO STATION	Unclass. Excav. Culvert Inlets and Outlets	Excav. for Structures	Excav. for Structures (Bridges)	Headwalls Number & Type: Headwalls for C.M.P. Option	Headwalls Number & Type: Cutoff Walls for R.C.P. Option	Class A Concrete: C.M.P. Option	Class A Concrete: R.C.P. Option	Reinforcement Steel: C.M.P. Option	Reinforcement Steel: R.C.P. Option	Steel Bridge Railing	Culvert Pipe: A 24-inch	Culvert Pipe: B 48-inch	Culvert Pipe: Height of Cover (feet)	24-inch Culvert Pipe Elbows	End Sections for 24-inch Pipe Culverts	Wire Enclosed Riprap	8-inch Perf. Corr. Metal Pipe Underdrain	Porous Backfill Material	Bituminous Curbs
	Cu. Yd.	Cu. Yd.	Cu. Yd.			Cu. Yd.	Cu. Yd.	Lb.	Lb.	Lin. Ft.	Lin. Ft.	Lin. Ft.		Each	Each	Sq. Yd.	Lin. Ft.	Cu. Yd.	Lin. Ft.
1606+00	10	15									56		3		2				
1614+00	5	20									56		2		1-Lt.				
1628+00		10									68		3		1-Lt.				
1636+10 (7' x 5' CBC)		30				41.6	41.6	3,940	3,940										
1640+25 (Bridge)			350			268.0	268.0	83,700	83,700	225						400			
1685+50		15									80		12		1-Rt.				
1689+12 (7' x 5' CBC)		35				50.6	50.6	5,350	5,350										
1695+50		10									74		6		1-Rt.				
1704+00	5	10									64		4		1-Rt.				
1715+50		5									62		3		1-Rt.				
1727+50	5	65									98		13		1-Rt.				
1730+00	10	105									114		17	1-Rt.	1-Rt.				
1738+78				1-A-Lt.	1-Lt.	1.3	1.0	193	85			168	36						
1746+00	100	50									72		2	1-Rt.	1-Rt.				
1752+50	40	20									52		2	1-Rt.	1-Rt.				
1761+00 (Extend 5' x 5' CBC)		10				15.0	15.0	1,190	1,190										
Wire Enclosed Riprap																			
1646+00 to 1647+90 Lt.																465			
1648+75 to 1650+25 Lt.																361			
1668+90 to 1671+25 Lt.																556			
Underdrain																			
1713+00 (Lateral)		25															50	20	
1713+00 to 1715+50 Rt.		125															250	100	
1746+00 (Lateral)		25															50	20	
1746+00 to 1747+00 Rt.		50															100	40	
1753+00 (Lateral)		25															50	20	
1753+50 to 1758+00 Rt.		225															450	180	
Bituminous Curbs																			
1727+50 to 1737+00 Rt.		40																	950
Totals	175	915	350			376.5	376.2	94,373	94,265	225	796	168	-	3	12	1,782	950	380	950
Use	-	1,000	350			377		94,500		225	820	168	-	3	12	1,900	1,000	400	1,000

Station to Station	560(2) Maint. Marker Posts	560(5) Delineators	564(1) Barbed Wire Fence, Type 3-A	564(2) Gates, Standard 14-foot
	Each	Each	Lin. Ft.	Each
Maintenance Marker Posts (Every 10 Stations)				
1610+00 to 1760+00	16			
Delineators				
1412+00 to 1764+50		562		
Barbed Wire Fence				
1603+00 to 1638+00 Lt.			3,500	
1603+00 to 1714+00 Rt.			10,900	
1650+00 to 1652+00 Lt.			200	
Gates				
1604+00 Lt. & Rt.				2
1609+00 Lt. & Rt.				2
1635+50 Lt.				1
1703+75 Rt.				1
Totals	16	562	14,600	6
Use	16	570	15,000	6

RECAPITULATION OF ITEMS

ITEM Nº	NAME	UNIT	QUANTITY
10	Miscellaneous force account	C. S.	-
102(1)	UNCLASSIFIED EXCAVATION	Cu. Yd.	220,000
102(9)	Furrow ditches	Lin. Ft.	2,100
103(1)	Excavation for structures	Cu. Yd.	1,000
103(2)	Excavation for structures (bridges)	Cu. Yd.	350
104(2)	Special subbase, grading B-1	Ton	32,000
105(2)	Yard mile overhaul	Yd.-Mi.	14,000
107(1)	Finishing previously constructed roadbed	Mile	3.6
108(1)	Watering	Unit	5,000
109(1)	Rolling	Hour	1,600
200(4)	CRUSHED AGGREGATE BASE, GRADING E	Ton	26,000
217(1)	PLANT-MIXED BASE	Ton	10,000
217(2)	Asphalt cement, 120-150 pen., plant-mixed base	Ton	550
310(4)	Asphalt, grade MC-0 or 1, prime coat	Ton	160
313(12)	Emulsified asphalt, grade SS-1, seal coat	Ton	40
406(1)	CLASS A CONCRETE	Cu. Yd.	377
407(1)	Reinforcement steel	Lb.	94,500
422(2)	Steel bridge railing	Lin. Ft.	225
458(1A)	24-inch culvert pipe	Lin. Ft.	820
458(1B)	48-inch culvert pipe	Lin. Ft.	168
458(2)	24-inch culvert pipe elbows	Each	3
460(4)	End sections for 24-inch pipe culverts	Each	12
515(1)	Wire enclosed riprap	Sq. Yd.	1,900
520(4)	8-inch perf. corr. metal pipe underdrain	Lin. Ft.	1,000
520(7)	Porous backfill material	Cu. Yd.	400
533(1)	Bituminous curbs	Lin. Ft.	1,000
560(2)	Maintenance marker posts	Each	16
560(5)	Delineators	Each	570
564(1)	Barbed wire fence, type 3-A	Lin. Ft.	15,000
564(2)	Gates, standard, 14-foot	Each	6
590(2)	Placing topsoil	Cu. Yd.	3,500

SUMMARY OF QUANTITIES

Dolores-Rico ROUTE: 1

PROJECT: 1-2(3), Grading and Bit. Stab. Base

STATE: Colorado COUNTIES: Montezuma and Dolores

NATIONAL: Forest: San Juan

Sheet 2 of 2 Sheets

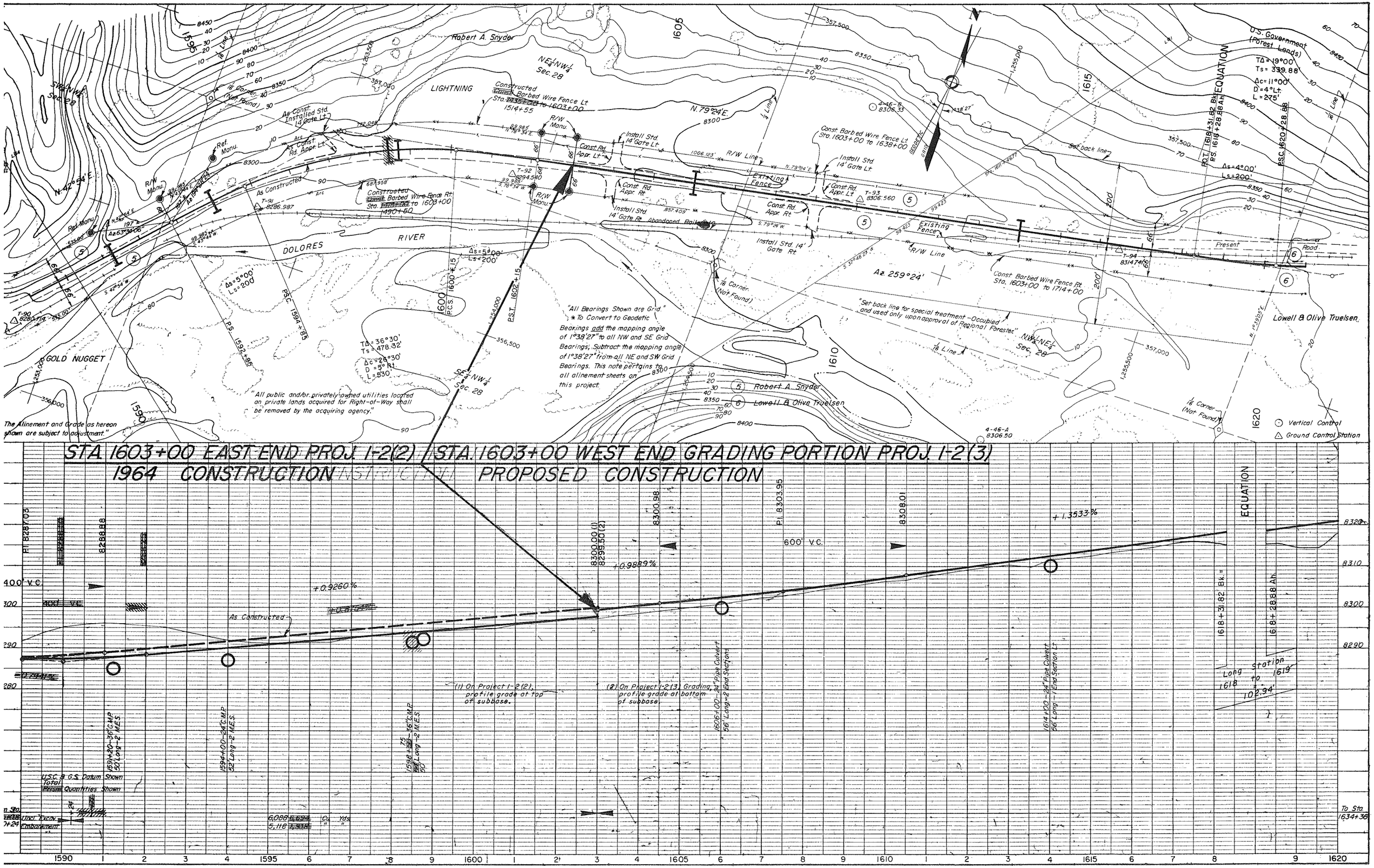

STA. 1603+00 EAST END PROJ. I-2(2) / STA. 1603+00 WEST END GRADING PORTION PROJ. I-2(3)
1964 CONSTRUCTION
PROPOSED CONSTRUCTION
Robert A. Snyder
LIGHTNING
DOLORES RIVER
GOLD NUGGET
Lowell & Olive Truelsen
U.S. Government (Forest Lands)
EQUATION
"All Bearings Shown are Grid."
* To Convert to Geodetic Bearings add the mapping angle of 1°38'27" to all NW and SE Grid Bearings; Subtract the mapping angle of 1°38'27" from all NE and SW Grid Bearings. This note pertains to all alinement sheets on this project.
"All public and/or privately owned utilities located on private lands acquired for Right-of-Way shall be removed by the acquiring agency."
"Set back line for special treatment - Occupied and used only upon approval of Regional Forester."
The Alinement and Grade as hereon shown are subject to adjustment."
Vertical Control
Ground Control Station
Const. Barbed Wire Fence Lt. Sta. 1603+00 to 1638+00
Const. Barbed Wire Fence Rt. Sta. 1603+00 to 1714+00
Install Std. 14' Gate Lt.
Install Std. 14' Gate Rt.
Const. Rd. Appr. Lt.
Const. Rd. Appr. Rt.
Existing Fence
R/W Line
Present Road
Az. 259°24'
N. 79°24'E.
N. 42°54'E.
P.I. 8287.03
8288.88
8300.00 (1)
8299.50 (2)
8300.98
P.I. 8303.95
8308.01
+0.9260%
+0.9889%
+1.3533%
600' V.C.
400' V.C.
As Constructed
(1) On Project I-2(2), profile grade at top of subbase.
(2) On Project I-2(3) Grading, profile grade at bottom of subbase.
1591+20-36" C.M.P. 50' Long-2 M.E.S.
1594+00-24" C.M.P. 52' Long-2 M.E.S.
1598+75-36" C.M.P. 50' Long-2 M.E.S.
1606+00-24" Pipe Culvert 56' Long-2 End Sections
1614+00-24" Pipe Culvert 56' Long-1 End Section Lt.
1618+31.82 Bk.
1618+28.88 Ah.
Long Station 1618 to 1619 = 102.94'
U.S.C. & G.S. Datum Shown
Total Quantities Shown
Uncl. Excav. Embankment
6,088 Cu. Yds.
5,118
To Sta. 1634+36

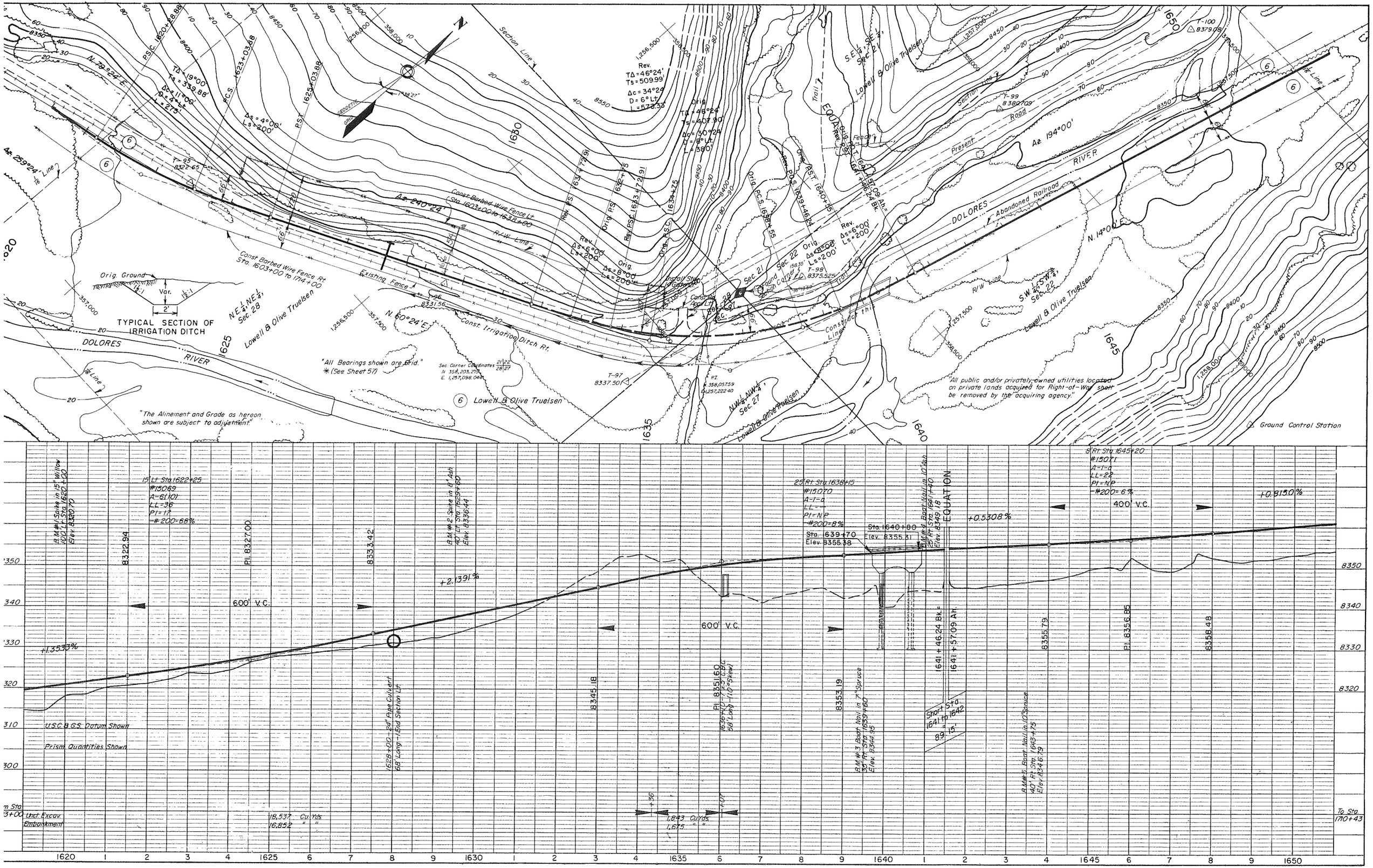

TYPICAL SECTION OF IRRIGATION DITCH
Orig. Ground
Var.
2'
DOLORES RIVER
Lowell & Olive Truelsen
Const. Barbed Wire Fence Rt. Sta. 1603+00 to 1714+00
Const. Barbed Wire Fence Lt. Sta. 1603+00 to 1638+00
Existing Fence
Const. Irrigation Ditch Rt.
"All Bearings shown are Grid." (See Sheet 57)
"The Alinement and Grade as hereon shown are subject to adjustment."
"All public and/or privately owned utilities located on private lands acquired for Right-of-Way shall be removed by the acquiring agency."
Ground Control Station
Abandoned Railroad
Present Road
Section Line
Trail
Fence
Az. 194°00'
Az. 240°24'
Az. 259°24'
N. 79°24' E.
N. 60°24' E.
N. 14°00' E.
Rev. TΔ=46°24' Ts=509.99' Δc=34°24' D=6° Lt. L=573.33'
Orig. TΔ=46°24' Ts=407.90' Δc=30°24' D=8° Lt. L=380'
Rev. Δs=6°00' Ls=200'
Orig. Δs=8°00' Ls=200'
Sec. 21
Sec. 22
Sec. 27
Sec. 28
N.E.¼, N.E.¼, Sec. 28
N.W.¼, N.W.¼, Sec. 27
S.W.¼, S.W.¼, Sec. 22
S.E.¼, S.E.¼, Sec. 21
Construct this Line
Install Stop
Const. Rd. Appr. Lt.
Ground Section Corner
Sec. Corner Coordinates N 358,203.215 E 1,257,098.044
P.I. N 358,057.59 E 1,257,222.40
T-95 8322.65
T-96 8331.56
T-97 8337.50
T-98 8375.525
T-99 8380.709
T-100 8379.08
1620
1625
1630
1635
1640
1645
1650
15' Lt. Sta. 1622+25 #15069 A=6(10) LL=36 PI=17 -#200=68%
25' Rt. Sta. 1638+15 #15070 A-1-a LL-- PI=NP -#200=8%
8' Rt. Sta. 1645+20 #15071 A-1-a LL=22 PI=NP -#200=6%
B.M.#1 Spike in 15" Willow 100' Lt. Sta. 1620+00 Elev. 8320.70
B.M.#2 Spike in 8" Ash 40' Lt. Sta. 1629+60 Elev. 8336.44
B.M.#3 Boat Nail in 7" Spruce 35' Rt. Sta. 1639+60 Elev. 8344.95
B.M.#4 Boat Nail in 10" Ash 25' Rt. Sta. 1641+40 Elev. 8349.18
B.M.#5 Boat Nail in 10" Spruce 40' Rt. Sta. 1643+75 Elev. 8346.79
Sta. 1639+70 Elev. 8355.38
Sta. 1640+80 Elev. 8355.31
EQUATION
+0.5308%
+0.8150%
+2.1391%
+1.3533%
600' V.C.
600' V.C.
400' V.C.
8322.94
PI 8327.00
8333.42
8345.18
PI 8351.60
8353.19
1641+46.24 Bk.=
1641+57.09 Ah.
Short Sta. 1641 to 1642 = 89.15'
8355.79
PI 8356.85
8358.48
1628+00-24" Pipe Culvert 68' Long-1 End Section Lt.
1636+10-7'x5' C.B.C. 58' Long-(10° Skew)
U.S.C.&G.S. Datum Shown
Prism Quantities Shown
Unct. Excav. Embankment
18,537 Cu. Yds.
16,852 " "
1,843 Cu. Yds.
1,675 " "
To Sta. 1710+43