AS CONSTRUCTED PLANS
RETURN TO DIST. 4 DESIGN

TITLE SHEET

STATE DEPARTMENT OF HIGHWAYS
DIVISION OF HIGHWAYS — STATE OF COLORADO

R.O.W. UNDER FC 014-2(8)
P.E. AND UTILITIES UNDER FC 014-2(3)

FEDERAL ROAD REGION NO	DIVISION	PROJECT NO	SHEET NO
VIII	COLORADO	FR 014-2(12)	1

AS CONSTRUCTED			
NO REVISIONS		REVISED 10-15-84	VOID

REVISIONS		

PLAN AND PROFILE OF ~~PROPOSED~~ AS CONSTRUCTED

FEDERAL AID PROJECT NO. FR 014-2(12)

STATE HIGHWAY NO. 14

LARIMER COUNTY

SCALES OF ORIGINAL DRAWINGS
ON PLAN, 1 IN. = 50 FT
ON PROFILE { 1 IN. = 50 FT HORIZONTAL
1 IN. = 5 FT VERTICAL
GRADE LINE ON PROFILE IS SHOWN AS GRADE OF FINISHED ROAD

TABULATION OF LENGTH AND DESIGN DATA

STATION	LINEAR FEET ROADWAY	LINEAR FEET MAJOR STRUCTURE
STA. 3+00.00 BEGIN FR 014-2(12) = STA 3+00.00 ON FC 014-2(8) M.P. 139.420		
STA. 9+73.00 BEGIN MAJOR STRUCTURE NO. B-17-DJ	673.00	
		67.33
STA. 10+40.33 END MAJOR STRUCTURE NO. B-17-DJ	2580.67	
STA. 36+21.00 END FR 014-2(12) = STA. 36+21.00 ON FC 014-2(8) = M.P. 140.049		
TOTAL	3253.67	67.33

SUMMARY	LIN. FT.	MILES
ROADWAY (NET LENGTH)	3253.67	0.616
MAJOR STRUCTURE	67.33	0.013
PROJECT GROSS LENGTH	3321.00	0.629

DESIGN DATA

MAXIMUM DEGREE OF CURVE	NA
MAXIMUM GRADE	1.462%
MINIMUM SSD HORIZONTAL	>650
MINIMUM SSD VERTICAL	>650
MAXIMUM DESIGN SPEED	55 MPH
2004 DESIGN TRAFFIC VOLUME	DHV=1090 ADT=9950

STA 3+00 BEGIN FR 014-2(12) =
STA. 3+00 ON FC 014-2(8) =
M.P. 139.420

STA. 36+21 END FR 014-2(12) =
STA. 36+21 BEGIN CONST. PROJ. FC 014-2(8) =
M.P. 140.049

SCALE IN MILES
0 0.5 1 2 3 4
0 1 2 3 4 5 6
SCALE IN KILOMETRES

INDEX OF SHEETS

1 TITLE SHEET, PROJECT LOCATION MAP, LENGTH AND DESIGN DATA AND INDEX OF SHEETS.
2 STANDARD PLANS LIST.
3-4 TYPICAL SECTIONS AND GENERAL NOTES.
5-7 SUMMARY OF APPROXIMATE QUANTITIES.
8-9 STRUCTURE QUANTITIES.
10 SURFACING PLAN.
11 FENCING TABULATION.
12 SCHEDULE OF CONSTRUCTION TRAFFIC CONTROL DEVICES AND TABULATION OF REMOVAL OF ABANDONED IRRIGATION STRUCTURES AND MODIFY MANHOLE DETAIL.
13 SUMMARY OF EARTHWORK AND TABULATION OF DELINEATORS AND GUARDRAIL.
14 DETOUR DETAIL.
15 DETAIL OF MEDIAN TRANSITION AND PROFILE GRADE.
16 TRAFFIC DATA-TURNING MOVEMENTS.
17-24 CONCRETE BOX CULVERT PLANS AND DETAILS.
25-27 PLAN AND PROFILE SHEETS.
28 TABULATION OF PAVEMENT MARKINGS.
29-30 DETAILS OF FLASHING BEACON
31-32 STRIPING PLAN

NEW AND REVISED STANDARDS.

M-606-12 GUARD RAIL TYPE 4 CONCRETE BARRIER (9 SHEET) 2-18-83

DIVISION OF HIGHWAYS

APPROVED: Robert L. Lounge 12-21-84
CHIEF ENGINEER DATE

AS CONSTRUCTED INFORMATION

CONTRACTOR Sterling Paving Company
Resident ENGINEER L. E. Dodd
(Project or Resident)
PROJECT STARTED October 5, 1984
PROJECT COMPLETED October 15, 1984
AS CONSTRUCTED PLANS APPROVED O. S. Peterson
DRE 12/1/84
TITLE DATE

P. C. H.

AS CONSTRUCTED		
NO. REVISIONS	REVISED	VOID

FEDERAL ROAD REGION NO.	DIVISION	PROJECT NO.	SHEET NO.	TOTAL SHEETS
VIII	COLORADO	FR 014-2(12)	2	32

Plan No.	Title	Page
M-100-1	STANDARD SYMBOLS	1
M-107-1	TEMPORARY EROSION CONTROL	2
M-203-1	APPROACH ROADS, FLARING, CUT SLOPE TREATMENT, BRIDGE & CREST WIDENING	3
M-203-2	DITCH TYPES	4
M-203-10	SUPERELEVATION OF CURVES - CROWNED HIGHWAYS	5
M-203-11	SUPERELEVATION OF CURVES - DIVIDED HIGHWAYS - SHOULDER PIVOT	6
M-203-12	SUPERELEVATION OF CURVES - STREETS	7
M-203-13	SUPERELEVATION OF CURVES - DIVIDED HIGHWAYS - CENTER PIVOT	8
M-206-1	EXCAVATION AND BACKFILL FOR STRUCTURES (2 SHEETS)	9
M-206-2	EXCAVATION AND BACKFILL FOR BRIDGES	11
M-214-1	PLANTING DETAILS	12
M-412-1	CONCRETE PAVEMENT JOINTS	13
M-504-1	STEEL CRIBBING	14
M-506-1	GABIONS AND SLOPE MATTRESS	15
M-510-1	STRUCTURAL PLATE CULVERT PIPE - H-20 LOADING (2 SHEETS)	16
M-601-1	SINGLE CONCRETE BOX CULVERT	18
M-601-2	DOUBLE CONCRETE BOX CULVERT	19
M-601-3	TRIPLE CONCRETE BOX CULVERT	20
M-601-10	HEADWALL FOR PIPE CULVERTS	21
M-601-11	TYPE "S" SADDLE HEADWALL FOR PIPE CULVERTS	22
M-601-12	HEADWALL, INTERCEPTING HEADWALL AND CULVERT OUTLET PAVING	23
M-601-20	WINGWALLS FOR PIPE OR BOX CULVERTS	24
M-603-1	METAL CULVERT PIPE - H-20 LOADING (2 SHEETS)	25
M-603-2	REINFORCED CONCRETE PIPE	27
M-603-3	PRECAST CONCRETE BOX CULVERT	28
M-603-10	CONCRETE AND METAL END SECTIONS	29
M-604-1	PIPE SEWER IN TRENCH	30
M-604-10	INLET, TYPE C	31
M-604-11	INLET, TYPE D	32
M-604-12	CURB INLET, TYPE R (2 SHEETS)	33
M-604-13	CONCRETE INLET, TYPE 13	35
M-604-20	MANHOLES	36
M-604-21	STEPS FOR MANHOLES & INLETS	37
M-606-1	GUARD RAIL, TYPE 3, W-BEAM (8 SHEETS)	38
M-606-2	GUARD RAIL, TYPE 3, W-BEAM FOR LOCAL ROADS & STREETS (4 SHEETS)	46
M-606-10	GUARD RAIL, TYPE 4, CONCRETE BARRIER, CAST-IN-PLACE	50
M-606-11	GUARD RAIL, TYPE 4, CONCRETE BARRIER, PRECAST-PORTABLE	51
M-607-1	WIRE FENCES AND GATES (2 SHEETS)	52
M-607-2	CHAIN LINK FENCE (3 SHEETS)	54
M-607-3	BARRIER FENCE	57
M-607-4	DEER FENCE AND GATE (2 SHEETS)	58
M-607-10	PICKET SNOW FENCE	60
M-608-1	CURB RAMPS	61
M-609-1	CURBS AND GUTTERS	62
M-611-1	CATTLE GUARD - WELDED GRILL UNITS - 10' THRU 42' ROADWAYS (2 SHEETS)	63
M-613-1	HIGHWAY LIGHTING (2 SHEETS)	65
M-615-1	EMBANKMENT PROTECTOR, TYPES 3 & 4	67
M-615-2	EMBANKMENT PROTECTOR, TYPE 5	68
M-616-1	INVERTED SIPHON (ALSO USE M-603 OR M-604 AS REQUIRED)	69
M-620-1	FIELD LABORATORY - CLASS 1	70
M-620-2	FIELD LABORATORY - CLASS 2	71
M-620-11	FIELD OFFICE - CLASS 1	72
M-620-12	FIELD OFFICE - CLASS 2	73
S-612-1	TYPICAL DELINEATOR INSTALLATIONS (4 SHEETS)	75
S-614-1	TYPICAL GROUND SIGN PLACEMENT	79
S-614-2	CLASS I GROUND SIGN INSTALLATIONS	80
S-614-3	CLASS II GROUND SIGN INSTALLATIONS	81
S-614-4	CLASS III SIGNS, LAMINATED ALUMINUM PANELS AND POST SPACING TABLE (2 SHEETS)	82
S-614-5	BREAK-AWAY SIGN SUPPORT DETAILS FOR GROUND SIGNS (2 SHEETS)	84
S-614-6	CONCRETE FOOTINGS AND SIGN ISLANDS FOR CLASS III SIGNS (2 SHEETS)	86
S-614-10	TYPICAL MARKER ASSEMBLY INSTALLATIONS	88
S-614-11	MILEPOST SIGN AND INSTALLATION	89
S-614-12	STRUCTURE NUMBER INSTALLATION (BRIDGE INFORMATION SHEET)	90
S-614-13	STANDARD RAILROAD CROSSING SIGNS AND MARKINGS	91
S-614-20	TYPICAL POLE MOUNT SIGN INSTALLATION	92
S-614-21	CONCRETE BARRIER SIGN POST INSTALLATIONS	93
S-614-22	TYPICAL MULTI-SIGN INSTALLATIONS	94
S-614-30	INTERSTATE ROUTE MARKERS	95
S-614-31	U. S. & COLORADO ROUTE MARKERS	96
S-614-32	AUXILIARY MARKERS	97
S-614-40	TRAFFIC SIGNAL INSTALLATION DETAILS (3 SHEETS)	98
S-614-50	TRAFFIC CONTROLS FOR HIGHWAY CONSTRUCTION (4 SHEETS)	101
S-614-51	BARRICADES, DRUMS, CONCRETE BARRIER (TEMP) & VERTICAL PANELS	105
S-627-1	TYPICAL PAVEMENT MARKINGS (3 SHEETS)	106

THE STANDARD PLAN SHEETS INDICATED HEREON BY A MARKED BOX ARE TO BE USED TO CONSTRUCT THIS PROJECT.

DEPARTMENT OF HIGHWAYS
STATE OF COLORADO
DIVISION OF HIGHWAYS

STANDARD PLANS LIST

M & S STANDARDS — JANUARY, 1982

DIVISION OF HIGHWAYS, STATE OF COLORADO
D.O.H. FORM NO. 126
REV. FEB., 1977

FEDERAL ROAD REGION NO.	DIVISION	PROJ. NO.	SHEET NO.	TOTAL SHEETS
VIII	COLORADO	FR 014 - 2(12)	3	32

AS CONSTRUCTED

NO REVISIONS ☐ REVISED 8-15-85 VOID ☐

TYPICAL SECTION A

STA 3+00 TO STA. 7+00

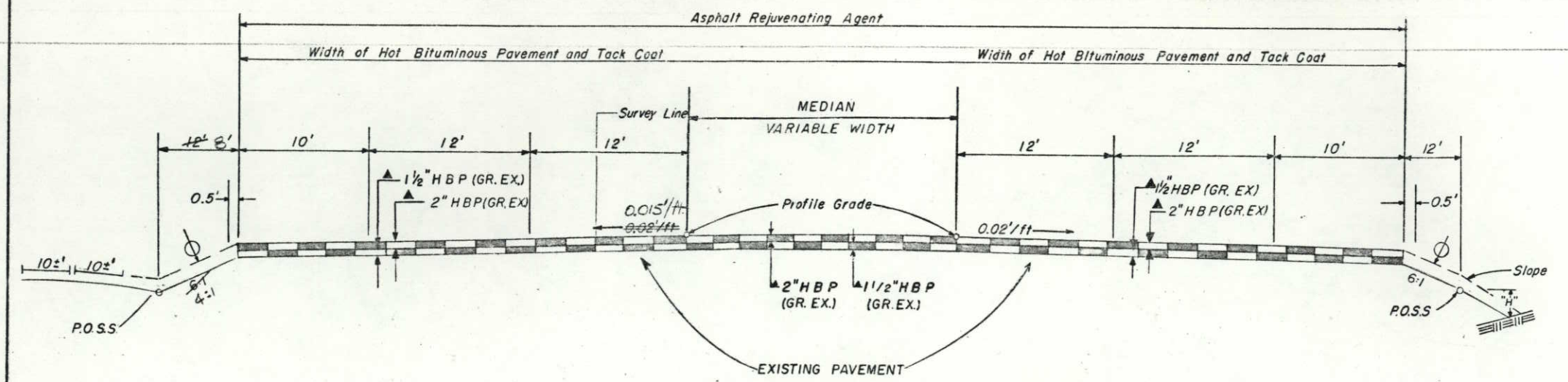

Φ Min. 4" Topsoil
P.O.S.S. ~ Point of Slope Selection
▲ Approximate Thickness

Fill Slopes:
Slopes 6:1 Where "H" is 4' or less.
Slopes 4:1 where "H" is greater than 4' and less than 15'.

THE DEPTH AND WIDTH OF THE SIDE DITCH SHALL BE VARIED WHERE NECESSARY IN ORDER TO PROVIDE PROPER DRAINAGE.

TYPICAL SECTION B

STA. 7+00 TO STA. 12+40

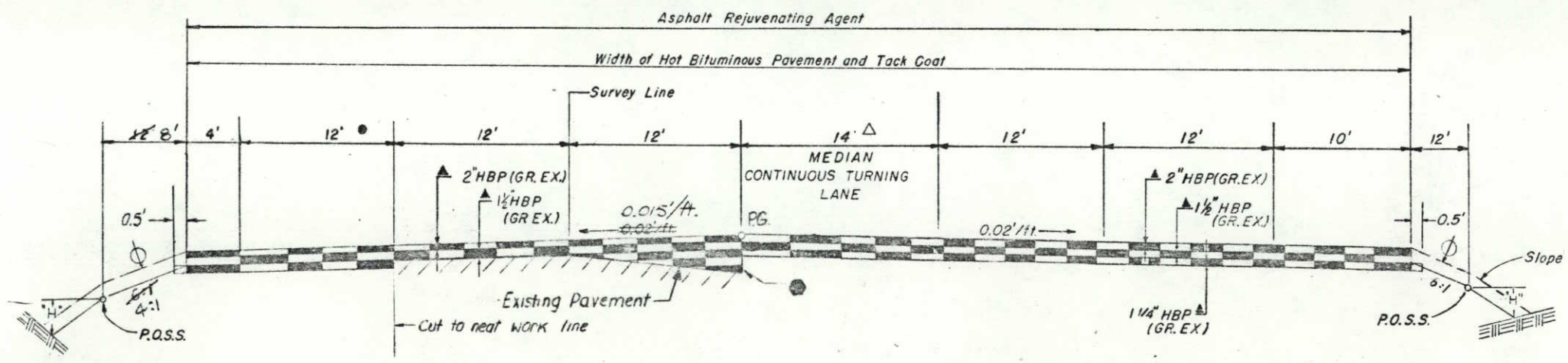

● When the level of any part of the existing pavement is below the bottom layer of the new roadway, H.B.P. (Gr. EX) will be used to fill this void.

● Sta. 7+00 to Sta. 9+70 ~ 0-12' taper

△ Sta. 7+00 to Sta. 9+00 Median Varies 19' to 14'

DETOUR TYPICAL SECTION

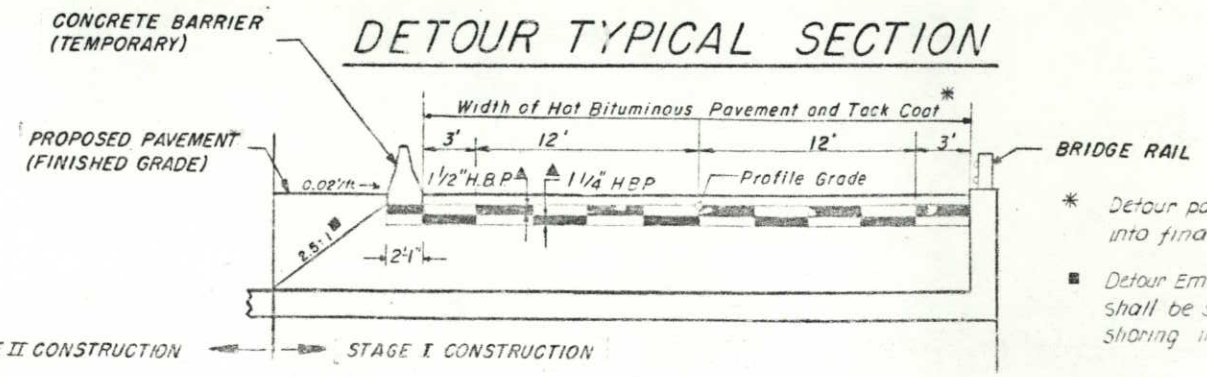

* Detour pavement shall be incorporated into final roadway pavement.

■ Detour Embankment shall be shored for stage II construction. Shoring included in the work.

GENERAL NOTES

FOR PRELIMINARY PLAN QUANTITIES OF BITUMINOUS MATERIALS THE FOLLOWING RATES OF APPLICATION WERE USED:
TACK COAT-DILUTED EMUL. ASPH. (SLOW SETTING).....@ 0.1 GALS./SQ.YD
BITUMINOUS PAVEMENT.....@ 110 LBS.PER/SQ.YD /INCH
~~ASPHALT REJUVENATING AGENT. NOT REQUIRED~~..... @ 0.05 GALS./SQ.YD. (DILUTED 2 PARTS A.R.A. :1 PART WATER)

DILUTED EMULSIFIED ASPHALT FOR TACK COAT SHALL CONSIST OF 1 PART EMULSIFIED ASPHALT AND 1 PART WATER.

RATES OF APPLICATION SHALL BE AS DETERMINED BY THE ENGINEER AT THE TIME OF APPLICATION.

THE FOLLOWING SHALL BE FURNISHED WITH EACH BITUMINOUS PAVER.

1. A SKI TYPE DEVICE AT LEAST 30 FEET IN LENGTH.
2. SHORT SKI OR SHOE.

ANY LAYER OF BITUMINOUS PAVEMENT THAT IS TO HAVE A SUCCEEDING LAYER PLACED THEREON SHALL BE COMPLETED FULL WIDTH BEFORE SUCCEEDING LAYER IS PLACED.

ROAD APPROACHES WHICH REQUIRE BITUMINOUS PAVEMENT ~~SHALL~~ HAVE A ~~2"~~ 2½" THICKNESS OF H.B.P. PLACED AS FOLLOWS:
PUBLIC APPROACHES INCLUDING COUNTY ROADS AND ENTRANCES TO BUILDING OR RESIDENCES ~~SHALL BE~~ PAVED 50 FEET OUT FROM EDGE OF SHOULDER OR TO THE RIGHT OF WAY LINE, WHICHEVER IS LESS. FIELD ENTRANCES ~~SHALL BE~~ WERE PAVED 4 FEET OUT FROM EDGE OF SHOULDER.

DEPTH OF MOISTURE-DENSITY CONTROL FOR THIS PROJECT SHALL BE AS FOLLOWS:

FULL DEPTH OF ALL EMBANKMENTS.
BASES OF CUTS AND FILLS 0.5 FOOT.

EXCAVATION REQUIRED FOR COMPACTION OF BASES OF CUTS AND FILLS WILL BE CONSIDERED AS SUBSIDIARY TO THAT OPERATION AND WILL NOT BE PAID FOR SEPARATELY.

TYPE OF COMPACTION FOR THIS PROJECT WILL BE AASHTO T99

THE MINIMUM THICKNESS OF TOPSOIL SHALL BE 4 INCHES. ~~IT IS ESTIMATED THAT 2516~~ 2362 CU. YDS. ~~WILL BE~~ REQUIRED BASED ON AVERAGE THICKNESS, AND ~~WILL BE~~ WERE OBTAINED FROM WITHIN R.O.W. LIMITS. WERE

SEEDING, SOIL PREPARATION, FERTILIZING WITH COMMERCIAL FERTILIZER, AND MULCHING ~~WILL BE~~ WAS REQUIRED FOR ~~APPROXIMATELY 6.5~~ 6.9 ACRES FOR ROADWAY ON ALL AREAS NOT SURFACED WITHIN RIGHT OF WAY LIMITS.
THE FOLLOWING TYPES AND RATES SHALL BE USED:

COMMON NAME	BOTANICAL NAME	RATE PLS/ACRE POUNDS
CRESTED WHEATGRASS	AGROPYRON DESERTORUM	10
WESTERN WHEATGRASS	AGROPYRON SMITHII	5
~~*PROSO MILLET~~	~~PANICUM MILIACEUM~~	~~10~~
*FOR FALL PLANTING SUBSTITUTE WINTER WHEAT V. WICHITA TRITICUM ASTICUM		(*15)
FALL TOTAL PLS/ACRE SEEDING		~~25~~ 30
MULCHING MATERIAL: NATIVE HAY 1.5 TONS PER ACRE		
COMMERCIAL FERTILIZER	RATE LBS/ACRE	
AVAILABLE N	45	
AVAILABLE P	115	

PROJECT TOTALS			PLAN	FINAL
SEEDING	(NATIVE)	WAS	~~63~~ LBS.	90 LBS.
MULCHING			10 TONS	10.35 TONS
FERTILIZER	(AVAILABLE N)		293 LBS.	311 LBS.
FERTILIZER	(AVAILABLE P)		748 LBS	794 LBS.
SOIL PREPARATION	(NATIVE)		6.5 ACRES	6.9 ACRES

PERMANENT SIGNING ON THIS PROJECT WILL BE DONE BY STATE FORCES

STATE OF COLORADO
STATE DEPARTMENT OF HIGHWAYS
DIVISION OF HIGHWAYS:
D. O. H. FORM NO. 126:
REV. FEB. 1984

AS CONSTRUCTED						
NO REVISIONS		REVISED	12-16-85	VOID		

FED. ROAD REGION	DIVISION	PROJ. NO.	SHEET NO.	SHEET TOTALS
VIII	COLO.	FR 014-2(12)	4	32

TYPICAL SECTION C ☆

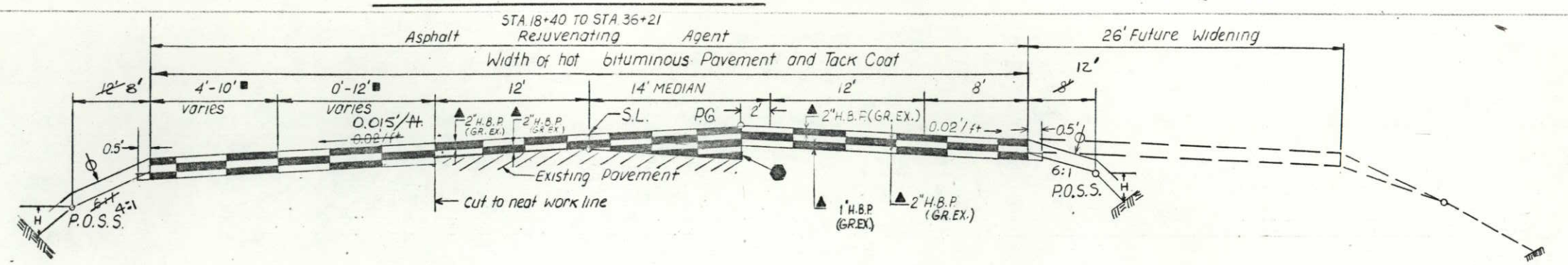

Fill Slopes:
Slope 6:1 where "H" is 4' or less
Slope 4:1 where "H" is greater than 4' and less than 15'

● When the level of any part of the existing pavement is below the bottom layer of the new roadway, H.B.P. (Gr. Ex.) will be used to fill this void.

☆ Section from sta. 12+40 to sta. 18+40 transitions from typical section B to typical section C

■ Use 4' shoulder when 12' auxiliary lane is required. See striping plan for details.

Use 10' shoulder when no auxiliary lane is required. See striping plan for details.

▲ Approximate Thickness

ϕ Min. 4" Topsoil

THE STATE DEPARTMENT OF HIGHWAYS
DIVISION OF HIGHWAYS - STATE OF COLORADO
DOH Form No. 113 (Mylar)
REV. MAY 1978

SUMMARY OF ~~APPROXIMATE~~ FINAL QUANTITIES

AS CONSTRUCTED
NO REVISIONS [ ] REVISED [10-15-85] VOID [ ]

FEDERAL ROAD REGION NO.	DIVISION	PROJ. NO.	SHEET NO.	TOTAL SHEETS
VIII	COLORADO	FR 014-2(12)	5	32

INDEX 305 BOOK	INDEX FORM ~~PAGE~~	INDEX SHEET	CONTRACT ITEM NO.	CONTRACT ITEM	UNIT			PLAN ROADWAY	AS CONSTR. ROADWAY			PLAN STRUCTURE NO. B-17-DJ	AS CONSTR. STRUCTURE NO. B-17-DJ		PLAN UTILITIES	AS CONST. UTILITIES	PLAN PROJECT TOTALS	AS CONST. PROJECT TOTALS	DIFF. +/-	% PLAN
X	105		105	CONSTRUCTION STAKES	HOUR			0	4								0	4	+4	—
X			201	CLEARING AND GRUBBING	L.S.			1	1								1	1	Ø	100
X			202	REMOVAL OF STRUCTURES AND OBSTRUCTIONS	L.S.			1	1								1	1	Ø	100
X			202	REMOVAL OF STRUCTURE	EACH			3	1								3	1	-2	33
X			202	REMOVAL OF PIPE	LIN.FT.			28	152								28	152	+124	543
X			202	REMOVAL OF DELINEATOR	EACH			30	21								30	21	-9	70
X			202	REMOVAL OF PAVEMENT MARKING	SQ.FT.			2000	795								2000	795	-1,205	40
X			202	REMOVAL OF PORTIONS OF PRESENT STRUCTURE	EACH							1	1				1	1	Ø	100
X			202	REMOVAL OF FENCE	LIN.FT.			3958	3,096								3,958	3,096	-862	78
X			203	EMBANKMENT MATERIAL (COMPLETE IN PLACE)	CU. YD.			23940	24,189								23,940	24,189	+249	101
X			206	STRUCTURE EXCAVATION	CU.YD.			522	490			1710	1,710				2,232	2,200	- 32	99
X			206	STRUCTURE BACKFILL (CLASS 2)	CU.YD.			509	549			710	710				1,219	1,259	+ 40	103
X			206	FILTER MATERIAL (CLASS B)	CU.YD.							25	25				25	25	Ø	100
X			207	TOPSOIL (HAUL)	CU YD			3,510	2,362								3,510	2,362	-1,148	67
X			207	STOCKPILE TOPSOIL (HAUL)	CU YD.			3,510	2,362								3,510	2,362	- 1,148	67
X			210	RESET MAILBOX STRUCTURE	EACH			4	3								4	3	-1	75
X			210	RESET GROUND SIGN	EACH			1	14								1	14	+13	1,400
X			210	RESET FLASHING BEACON	EACH			1	1								1	1	Ø	100
	105		210	RELAY PIPE (12 INCH) - Deleted	LIN FT			28	Ø								28	Ø	-28	Ø
X			210	RELAY PIPE (18 INCH)	LIN FT			209	327								209	327	+118	156
X			210	ADJUST MANHOLE	EACH										3	2	3	2	-1	67
X			210	MODIFY MANHOLE	EACH										4	4	4	4	Ø	100
X			212	SEEDING (NATIVE)	LB			163	207								163	207	+44	127
X			212	FERTILIZER (AVAILABLE N)	LB			293	311								293	311	+18	106
X			212	FERTILIZER (AVAILABLE P)	LB.			748	794								748	794	+46	106
X			212	SOIL PREPARATION (NATIVE)	ACRE			6.5	6.9								6.5	6.9	+0.4	106
X			213	MULCHING	TON			10	10.35								10	10.35	+0.35	104
X	Field Sheet #2286		401	MATERIALS TESTING	L.S.			0	1								0	1	+1	—
X			403	HOT BITUMINOUS PAVEMENT (GRADING EX) (HAUL AND ASPHALT)	TON			7,807	6,943.40								7,807	6,943.40	-863.6	89

THE STATE DEPARTMENT OF HIGHWAYS
DIVISION OF HIGHWAYS - STATE OF COLORADO
DOH Form No. 113 (Mylar)
REV. MAY 1978

SUMMARY OF ~~APPROXIMATE~~ FINAL QUANTITIES

AS CONSTRUCTED		
NO REVISIONS	REVISED 10-15-85	VOID

FEDERAL ROAD REGION NO.	DIVISION	PROJ. NO.	SHEET NO.	TOTAL SHEETS
VIII	COLORADO	FR 014 - 2(12)	6	32

INDEX BOOK	INDEX FORM ~~PAGE~~	INDEX SHEET	CONTRACT ITEM NO.	CONTRACT ITEM	UNIT			PLAN ROADWAY	AS CONSTR. ROADWAY			PLAN STRUCTURE NO. B-17-DJ	AS CONSTR. STRUCTURE NO. B-17-DJ				PLAN PROJECT TOTALS	AS CONST. PROJECT TOTALS	DIFF. +/-	% PLAN
X			411	Emulsified Asphalt (Slow-Setting)	Gal.			3,107	1,846								3,107	1,846	-1,261	59
X &	105		411	Asphalt Rejuvenating Agent - (Deleted)	Gal.			786	Ø								786	Ø	-786	Ø
X			502	End Plate	Each							76	76				76	76	Ø	100
X			502	Steel Pipe Piling (10-3/4 Inch x 0.219)	Lin. Ft.							1,173	990				1,173	990	-183	84
X			502	Steel Pipe Piling (10-3/4 Inch x 0.219) Cutoff	Lin. Ft.							Ø	12				Ø	12	+12	—
X			502	Steel Pipe Piling (12-3/4 Inch x 0.219)	Lin. Ft.							2491	2,198				2,491	2,198	-293	88
X			502	Steel Pipe Piling (12-3/4 Inch x 0.219) Cutoff	Lin. Ft.							Ø	32	Actual Quant. = 29 L.F. Field Quant. paid			Ø	32	+32	—
X			601	Concrete Class A (Box Culvert)	Cu. Yd.							886	886				886	886	Ø	100
X			602	Reinforcing Steel	Lb.							129,615	139,290				129,615	139,290	+9,675	107
X			606	Guard Rail Type 3 (6-3 Post Spacing)	Lin Ft			450	450								450	450	Ø	100
X			606	End Anchorage Type 3E	Each			4	4								4	4	Ø	100
X			606	Bridge Rail Type 3R	Lin. Ft.							152	152				152	152	Ø	100
X			607	End Post	Each			26	15								26	15	-11	58
X			607	Corner And Line Brace Post	Each			13	17								13	17	+4	131
X			607	Fence Barbed Wire With Metal Posts	Lin. Ft.			2340	2,265								2340	2,265	-75	97
X			607	Fence Combination Wire With Metal Posts	Lin. Ft.			1394	1,426								1394	1,426	+32	102
X			607	16 Foot Gate	Each			2	1								2	1	-1	50
X			607	20 Foot Gate	Each			3	3								3	3	Ø	100
X			607	24 Foot Gate Twin	Each			2	2								2	2	Ø	100
X			612	Delineator (Type I)	Each			35	42								35	42	+7	120
X			612	Delineator (Type II)	Each			12	33								12	33	+21	275
X			612	Delineator (Type III)	Each			2	2								2	2	Ø	100
X			614	Flagging	Hour			2,000	784.5	Actual Quant. = 792.5 Hrs. Field Quant. paid							2,000	784.5	-1,215.5	39
X			614	Traffic Control Supervisor	Day			80	64								80	64	-16	80

THE STATE DEPARTMENT OF HIGHWAYS
DIVISION OF HIGHWAYS - STATE OF COLORADO
DOH Form No. 113 (Mylar)
REV. MAY 1978

SUMMARY OF ~~APPROXIMATE~~ FINAL QUANTITIES

AS CONSTRUCTED		
NO REVISIONS	REVISED 10-15-85	VOID

FEDERAL ROAD REGION NO.	DIVISION	PROJ. NO.	SHEET NO.	TOTAL SHEETS
VIII	COLORADO	FR 014-2(12)	7	32

INDEX 305 BOOK	INDEX ~~PAGE~~ Form	INDEX SHEET	CONTRACT ITEM NO.	CONTRACT ITEM	UNIT			PLAN ROADWAY	AS CONSTR. ROADWAY			PLAN STRUCTURE NO. B-17-DJ	AS CONSTR. STRUCTURE NO. B-17-DJ				PLAN PROJECT TOTALS	AS CONST. PROJECT TOTALS	DIFF. +/-	% PLAN
X			614	BARRICADE (TYPE 3M-B) (TEMPORARY)	EACH			2	2								2	2	Ø	100
X			614	CONSTRUCTION TRAFFIC SIGN (PANEL SIZE B)	EACH			17	38								17	38	+21	224
X &	cmo #1 Line 1		614	TRAFFIC CONES (28")	EACH			Ø	120								0	120	+120	—
X			614	VERTICAL PANEL	EACH			50	38								50	38	-12	76
X			614	VERTICAL PANEL (WITH LIGHT) (FLASHING)	EACH			20	6								20	6	-14	30
X			614	CONCRETE BARRIER (TEMPORARY)	LIN.FT.			302	314								302	314	+12	104
X &	105		617	18 INCH CULVERT PIPE - (DELETED)	LIN. FT.			10	Ø								10	Ø	-10	Ø
X &	105		617	24 INCH CULVERT PIPE - (DELETED)	LIN. FT.			12	Ø								12	Ø	-12	Ø
X &	105		617	30 INCH CULVERT PIPE - (DELETED)	LIN.FT			6	Ø								6	Ø	-6	Ø
X &	cmo #2 MA-	Line 2	617	24 INCH CMP (CIP)	LIN.FT.			Ø	6								Ø	6	+6	—
X			620	FIELD LABORATORY (CLASS 3)	EACH			1	1								1	1	Ø	100
X			620	SANITARY FACILITY	EACH			1	1								1	1	Ø	100
X			626	MOBILIZATION	L. S.			0.8	0.8			0.2	0.2				1	1	Ø	100
X			627	PAVEMENT MARKING PAINT	GAL.			83	153								83	153	+73	184
				FORCE ACCOUNT																
	cmo #1		F/A01	MINOR CONTRACT REVISIONS	F.A.			($6,400.00) 0.8	0			($1,600.00) 0.2	$198.55				($8,000.00) 1	$198.55	$-7,801.45	2.5
			F/A02	M.B.E. INCENTIVE PAYMENT	F.A.			1 ($5,000.00)									($5,000.00) 1	$14,992.57	$+9,992.57	300
X			F/A03	FINAL SIGNING (BY STATE FORCES)	F.A.			1	1								1	1	Ø	100
X			F/A04	ON-THE-JOB TRAINEE	EACH			2	2								2	2	Ø	100

STATE OF COLORADO
STATE DEPARTMENT OF HIGHWAYS
DIVISION OF HIGHWAYS
D. O. H. FORM NO. 125
REV. NOV. 1983

FINAL STRUCTURE QUANTITES

AS CONSTRUCTED						
NO REVISIONS		REVISED 10-1-85	VOID	FED. ROAD REGION	DIVISION	PROJ. NO.	SHEET NO.	TOTAL SHEETS
				VIII	COLO.	FR 014-2(12)	8	32

INDEX 305 BOOK	~~PAGE~~	~~SHEET~~	LOCATION	REMOVAL OF STRUCTURE EACH	UNCLASSIFIED EXCAVATION CUBIC YARD EXCAV	DITCH	EMB	STRUCTURE EXCAVATION CUBIC YARD PLAN	FINAL	STRUCTURE BACKFILL CUBIC YARD CL 2 PLAN	FINAL	MANHOLE ADJUST EACH	MODIFY EACH	AGGREGATE BASE COURSE (CLASS _) TON	HOT BITUMINOUS PAVEMENT (GRADING EX) TON	RESET MAILBOX STR. EACH	CONCRETE BOX CUBIC YARD CL. A	REINFORCING STEEL LB.	CONCRETE WALL CUBIC YARD CL.A	CULVERT PIPE LINEAR FEET RELAY 12" PLAN	FINAL	18" PLAN	FINAL	NEW 18"	24"	30"	"H" OVER CULV. FT.	END SECTION EACH	MISCELLANEOUS
X			-4+00 To 0+00																										174 sq.ft. REMOVAL OF PAVEMENT MARKING.
			0+00 To 3+00												(sht.No. * 10)														
			6+74													1													
			7+00				~~25~~ Ø								18														
			9+52	Ø 1																									(MANHOLE) REMOVED by UTILITY COMPANY
			9+73.0 To 10+40.3 ▲																										
			9+85	1																									(PIPE SUPPORT) REMOVED by UTILITY COMPANY
X			10+					490	490	490	490																		REMOVED UNSUITABLE MATERIAL AT CBC
X			10+67	1																									(MANHOLE)
			11+28																										~~1 EACH RESET GROUND SIGN~~ (NO SIGN THIS LOCATION)
X			11+84				60.2 ~~35~~			Ø	5.0				3							34	28						
X			12+95				16.3 ~~20~~			Ø	7.4				18							40	41						
X			13+70													1													
X			13+91				~~15~~ 12.4			Ø	4.5				4					28	Ø	Ø	25						(DELETED - 12" RELAY CULVERT)
X			14+36																										1 EACH RESET FLASHING BEACON
X			14+60				9.7 ~~15~~			Ø	3.6				16							29	20						
X			15+27				40.5 ~~95~~			Ø	4.1				34							44	23						
X			16+21				41.2 ~~50~~	5	Ø	4	10.4	Ø 1	1		24							Ø	58		10	Ø			(DELETED - NEW 18" CULVERT)
			18+08													1 Ø													(NO MAILBOX THIS LOCATION)
			18+70									Ø 1																	(NO MANHOLE THIS LOCATION)

▲ See Bridge Summary of Quantities for additional quantities

* See Surfacing Plan For Quantity

STATE OF COLORADO
STATE DEPARTMENT OF HIGHWAYS
DIVISION OF HIGHWAYS:
D. O. H. FORM NO. 125:
REV. NOV. 1983:

FINAL STRUCTURE QUANTITES

AS CONSTRUCTED			FED. ROAD REGION	DIVISION	PROJ. NO.	SHEET NO.	TOTAL SHEETS
NO REVISIONS	REVISED 10-15-85	VOID	VIII	COLO.	FR 014-2(12)	9	32

INDEX 305 BOOK	~~PAGE~~	~~SHEET~~	LOCATION	REMOVAL OF STRUCTURE EACH	UNCLASSIFIED EXCAVATION CUBIC YARD EXCAV	DITCH	EMB	STRUCTURE EXCAVATION CUBIC YARD PLAN	FINAL	STRUCTURE BACKFILL CUBIC YARD CL 2 PLAN	FINAL	MANHOLE ADJUST EACH	MODIFY EACH	AGGREGATE BASE COURSE (CLASS) TON	HOT BITUMINOUS PAVEMENT (GRADING) TON	RESET MAILBOX STR. EACH	CONCRETE BOX CUBIC YARD CL. A		REINFORCING STEEL LB.	CONCRETE WALL CUBIC YARD CL. A	CULVERT PIPE LINEAR FEET RELAY 12" PLAN	FINAL	18" PLAN	FINAL	NEW 18"	24"	30"	"H" OVER CULV. FT.	END SECTION EACH	MISCELLANEOUS
X			20+72				35.0 ~~50~~			Ø	11.2				28								62	62						
X			20+74									1																			
X			21+62				58.4 ~~90~~	21	Ø	10	4.3				3								Ø	24		Ø ~~12~~					~~12 LIN FT ~ EXTEND 24" x 24' RCP~~ ~~SIDESCARP 6' LT & 6' RT~~ (DELETED NEW 24" CULVERT) RELAYED EXISTING 18" CSP
X			22+70										1																		
			24+ TO 31+			Ø ~~80~~																									
X			25+89				27.4 ~~65~~	6	Ø	5	4.3				2								Ø	24				Ø ~~6~~			(DELETED NEW 30" CULVERT) ~~28~~ 25 LIN. FT. ~ REMOVAL OF PIPE
X			25+91													1															
X			26+67									1	Ø ~~1~~																		
X			30+71										1																		
X X X			34+70 34+90 35+ TO 36+				52.6			Ø	4.0		1										Ø	22							622 ~~200~~ SQ FT ~ REMOVAL OF PAVEMENT MARKING
			TOTALS	1 ~~3~~		80•	356 460▲	522	490	509	549	2 ~~3~~	4		150•	3 ~~4~~					28	Ø	209	327		Ø ~~10~~	Ø ~~12~~	Ø ~~6~~			

•- Quantity carried to Surfacing Plan.
▪- For Information Only
▲- Quantity carried to Summary of Earthwork.

STATE OF COLORADO
STATE DEPARTMENT OF HIGHWAYS
DIVISION OF HIGHWAYS
D. O. H. FORM NO. 1261
REV. FEB. 1984

AS CONSTRUCTED			
NO REVISIONS ☐	REVISED 10-15-85	VOID ☐	

FED. ROAD REGION	DIVISION	PROJ. NO.	SHEET NO.	SHEET TOTALS
VIII	COLO.	FR 014-2(12)	10	32

SURFACING PLAN

STATION TO STATION	SOURCE	QUANTITY TONS HOT BITUMINOUS PAVEMENT GRADING EX									
		WEDGE BETWEEN EXISTING AND NEW ROADWAY AND FILLING MEDIAN		BOTTOM LAYER		MIDDLE LAYER		TOP LAYER			
		PLAN	FINAL	PLAN	FINAL	PLAN	FINAL	PLAN	FINAL		
-4+00 ~~3+00~~ TO 7+00				114	225	348	480	464	965		
7+00 TO 9+10		50		60		164		218			
9+10 TO 11+00				127	210	152	130	201	151		
11+00 TO 15+50		98		212	582	355	560	437	959		
15+50 TO 23+25		169		208		589		629			
23+25 TO 26+00		60		61	389	201	503	198	802		
26+00 TO 29+25		71		66		222		222			
29+25 TO 32+00		60		61		198		198			
32+00 TO 36+21		92		101		319		319			
WEST APPROACH TO PROJECT						143	30	192	90		
EAST APPROACH TO PROJECT								38	—		
FROM STRUCTURE QUANTITIES						75	67	75	—		
IRREGULARITIES		90		152							
SUB TOTAL		690	850	1,160	1,356	2,766	1,770	3,191	2,967		
TOTAL		PLAN 7,807				6,943 FINAL *					

SOURCE: NEAR SCHWAZ

Note: Stabilization Based on

1. 18ᵏ E.D.L.A.	243 (4 Lane), 324 (2 Lane)
2. Regional Factor	0.5
3. Serviceability Index	2.5
4. R Value	60 (Borrow), 18 (subgrade)
5. W.S.N. (4 lane)	3.45 (overlay), 2.07 (widening)
W.S.N. (2 lane)	3.62 (overlay), 2.18 (widening)

Strength Coefficients

6. Hot Bituminous Pavement	.44
7. Asphalt Mat (Existing)	.26
8. Subbase (Existing)	.10

*NOTE - PROFILE GRADES WERE ADJUSTED TO REDUCE ASPHALT REQUIRED TO PRODUCE PROPER SURFACE.

STATE OF COLORADO
STATE DEPARTMENT OF HIGHWAYS
DIVISION OF HIGHWAYS:
D. O. H. FORM NO. 1261
REV. FEB. 1984

AS CONSTRUCTED					
NO REVISIONS ☐	REVISED ☐	VOID ☐	FED.ROAD REGION	DIVISION	PROJ. NO.	SHEET NO.	SHEET TOTALS
			VIII	COLO.	FR 014-2(12)	11	32

FENCING TABULATION

STATION TO STATION	SIDE	REMOVE FENCE LINEAR FEET		COMBINATION WIRE FENCE WITH METAL POSTS LINEAR FEET		BARBED WIRE FENCE WITH METAL POSTS LINEAR FEET		GATES-EACH 16 FOOT		18 FOOT		20 FOOT		24 FOOT	
		PLAN	FINAL	PLAN	FINAL	PLAN	FINAL	PLAN	FINAL	PLAN	FINAL	PLAN	FINAL	PLAN	FINAL
5+89 To 11+78	RT	740	872	579	565										
~~7+48~~ 7+75			83					1	1						
11+84			73											1	1
11+94 To 21+54		960	927			940	1007								
~~15+12~~ 15+27												1	1		
21+62 To 25+79		417	Ø			417	370								
25+99 To 36+21		1021	803			983	888								
25+82												1	1		
~~32+71~~ 34+90												1	1		
4+63 To 6+81	LT	218	235	183	211									Ø	1
7+16 To 7+42		26		26	16										
7+58 To 7+75		17		17	67										
7+75				30	31										
7+75 To 11+44		219	Ø	219	392										
11+44 To 11+48				32											
11+48 To 13+76		228	Ø	212	144										
13+05															
13+88 To 15+00		112	103	96	Ø									1	Ø
14+51								1	Ø						
TOTAL		3958	3096	1394	1426	2340	2265	2	1	Ø	Ø	3	3	2	2

REMOVAL OF GATES ~~WILL BE~~ WAS INCLUDED IN REMOVAL OF FENCE ITEM

~~IT IS ESTIMATED THAT 13~~ 17 CORNER AND LINE BRACE POSTS AND ~~26~~ 15 END POSTS ~~WILL BE~~ WERE REQUIRED FOR THIS PROJECT

ALL END POSTS AND CORNER AND LINE BRACE POSTS ~~SHALL BE~~ WERE METAL

STATE OF COLORADO
STATE DEPARTMENT OF HIGHWAYS
DIVISION OF HIGHWAYS:
D. O. H. FORM NO.126:
REV. FEB. 1984

AS CONSTRUCTED					
NO REVISIONS	REVISED 10-15-85	VOID			
FED.ROAD REGION	DIVISION	PROJ. NO.	SHEET NO.	SHEET TOTALS	
VIII	COLO.	FR 014-2(12)	12	32	

SCHEDULE OF CONSTRUCTION TRAFFIC CONTROL DEVICES

SIGN CODE	LEGEND	DIMENSIONS	PANEL SIZE EACH A	PANEL SIZE EACH B PLAN	PANEL SIZE EACH B FINAL	MISC. QUANTITIES EACH
48W20-1	ROAD/CONST./(DIST.)	48"×48"		3	9	
48W20-2	DETOUR (DIST.)	48"×48"		2	3	
48W4-2(R)	RT. LANE TRANSITION	48"×48"		1	1	
48W4-2(L)	LT. LANE TRANSITION	48"×48"		1	Ø	
48W20-7a	FLAGGER SYMBOL	48"×48"		2	6	
48W20-50	BE/PREPARED/TO/STOP	48"×48"		2	Ø	
48R11-2 48M4-10(R)	ROAD/CLOSED DETOUR ARROW RT.	48"×30" 48"×18"		1	1 1	
48R11-2 48M4-10(L)	ROAD/CLOSED DETOUR ARROW LT.	48"×30" 48"×18"		1	1 1	
36R2-1(40)	SPEED/LIMIT/40	36"×48"		2	3	
60G20-2	END/CONSTRUCTION	60"×24"		2	3	
VERTICAL PANEL						~~50~~ 38
VERTICAL PANEL (LIGHT) (F)						~~20~~ 6
CONCRETE BARRIER (TEMP.)						~~302'~~ 314
BARRICADE (3-MB) (TEMP) *						2
TRAFFIC CONES (28")						Ø 120
SUB-TOTALS				17	29	

SIGN CODE	LEGEND	DIMENSIONS	PLAN	FINAL PANEL SIZE B-EA.
48W20-4	ONE/LANE/ROAD	48"×48"	Ø	2
48W20-5	— LANE/CLOSED	48"×48"	Ø	1
36R2-1(25)	SPEED/LIMIT/25	36"×48"	Ø	2
48W1-3(R)	Double 90° Angle ARROW RT.	48"×48"	Ø	1
48W1-3(L)	Double 90° Angle ARROW LT.	48"×48"	Ø	2
48W20-7a	FLAGGER/1500'	48"×48"	Ø	1
Sub-Totals			Ø	9
Panel Size B Totals			17	38

NOTES

~~It is estimated that 10~~ 52 gallons of pavement marking paint (~~8~~ 21 gallons white, ~~8~~ 31 gallons yellow) ~~will be~~ were required for the construction detour. ~~The rate of application shall be not less than 200 nor more than 220 sq ft per gallon for this quantity only. It is further estimated that 1300 sq ft of pavement marking removal will be required for same.~~

* 3-MB Barricades to be furnished with flashing warning lights.

TABULATION OF REMOVAL OF ABANDONED IRRIGATION STRUCTURES * (FOR INFORMATION ONLY)

Station	Structure to be removed	Approximate Size of the Structure
~~12+01 Rt.~~	~~concrete irrigation structure~~	~~2'×3'×6'~~
~~12+07 Rt.~~	~~concrete irrigation structure~~	~~2'×3'×6'~~
15+00 Rt.	concrete division box	3'×3'×10'
15+41 Rt.	concrete irrigation structure	3'×3'×8'
24+38 Rt.	concrete division box	3'×3'×20'
28+26 Rt.	concrete division box	3'×3'×12'
29+91 Rt.	concrete division box	3'×3'×9'
32+80 Rt.	concrete irrigation structure	3'×3'×4'
32+28 Rt to 36+ Rt	concrete pipe	18"×400'
31+20 Rt.	concrete division box	3'×3'×12'

NO STRUCTURES THESE LOCATIONS.

* PAID FOR AS REMOVAL OF STRUCTURES AND OBSTRUCTIONS, L.S.

MODIFY MANHOLE - DETAIL

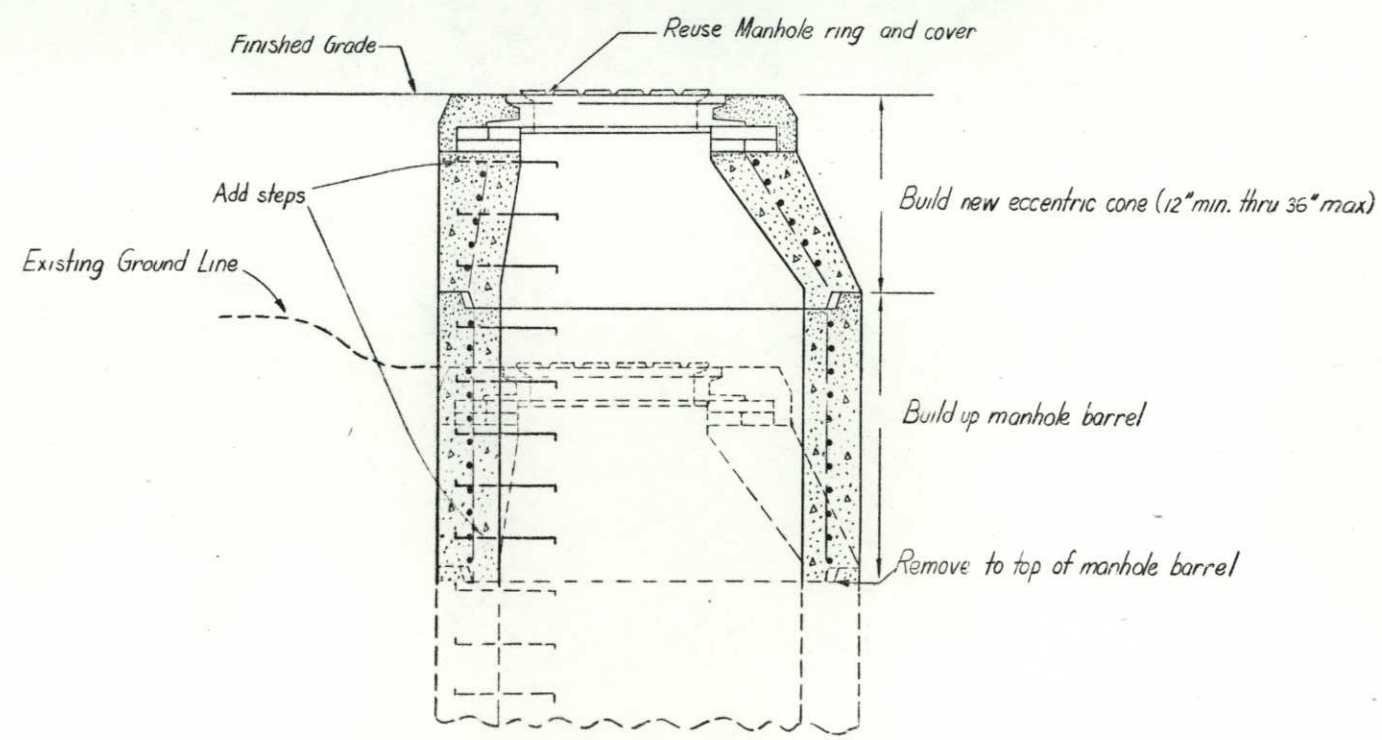

STATE OF COLORADO
STATE DEPARTMENT OF HIGHWAYS
DIVISION OF HIGHWAYS
D. O. H. FORM NO. 1261
REV. FEB. 1984

AS CONSTRUCTED						
NO REVISIONS		REVISED	10-15-85	VOID		

FED. ROAD REGION	DIVISION	PROJ. NO.	SHEET NO.	SHEET TOTALS
VIII	COLO.	FR 014-2(12)	13	32

SUMMARY OF EARTHWORK QUANTITIES

INDEX BOOK	~~PAGE~~	SHEET		PROJECT TOTALS PLAN	PROJECT TOTALS FINAL
			EMBANKMENT MATERIAL (COMPLETE IN PLACE)	CU. YD.	
X			ROADWAY	23,480	23,833
X			STRUCTURE QUANTITIES AS EMBANKMENT	460	356
			TOTAL FOR PAY QUANTITIES	23,940	24,189
			FOR INFORMATION ONLY *		
			COMPACTION (AASHTO T99)	CU. YD.	
			EMBANKMENT (NET)	23,480	
			BASE OF CUTS AND FILLS	4,830	
			STRUCTURE QUANTITIES AS EMBANKMENT (NET)	460	
			TOTAL	28,770	*
			WETTING	MGAL	
			COMPACTION (AASHTO T99)	1,151	
			TOTAL	1,151	*
			ROADWAY QUANTITIES BALANCE (FOR INFORMATION ONLY)	CU. YD.	
			EXCAVATION		
			UNCLASSIFIED (FROM CROSS SECTIONS)	312	
			*BORROW FROM UNDESIGNATED SOURCE	33,204	
			TOTAL	33,516	*
			EMBANKMENT NET		
			ROADWAY (FROM CROSS SECTIONS)	23,480	
			STRUCTURE QUANTITIES AS EMBANKMENT	460	
			TOTAL	23,940	*
			EMBANKMENT x FACTOR (1.4)		
			ROADWAY (FROM CROSS SECTIONS)	32,872	
			STRUCTURE QUANTITIES AS EMBANKMENT	644	
			TOTAL	33,516	*

* Borrow Material ~~shall have~~ had a minimum R value of 60.

TABULATION OF DELINEATORS *

Location	Type I LT. PLAN	Type I LT. FINAL	Type I RT. PLAN	Type I RT. FINAL	Type II LT. PLAN	Type II LT. FINAL	Type II RT. PLAN	Type II RT. FINAL	Type III LT. PLAN	Type III LT. FINAL	Type III RT. PLAN	Type III RT. FINAL
-4+00 Sta. ~~3+00~~ to Sta. 7+	1	13	1	4			Ø	4				
Sta. 7+ to Sta. 12+	5	4	5	4	3	7			1	1	1	1
Sta. 12+ to Sta. 18+	8	Ø	1	Ø	Ø	2	6	7				
Sta. 18+ to Sta. 28+	7	13	4	3	Ø	4						
Sta. 28+ to Sta. 36+	2	1	1	Ø	3	4	Ø	5				
SUBTOTALS	23	31	2	11	6	17	6	16	1	1	1	1
TOTALS	35 42				12 33				2			

* ~~It is estimated that 30~~ removal of delineators were ~~will be~~ required on this project.

GUARD RAIL ▲

Station	Side	Guard Rail Type 3 6'-3" Post Spacing Lin. Ft. Tan.	Flare	End Anchorage Type 3E Each
Sta. 8+23 to Sta. 9+73	Rt	75'	75'	1
Sta. 8+98 to Sta. 9+73	Lt		75'	1
Sta. 10+40 to Sta. 11+15	Rt		75'	1
Sta. 10+40 to Sta. 11+90	Lt	75	75'	1
Totals		FINAL=450		FINAL=4

▲ Guard rail to be galvanized

STATE DEPARTMENT OF HIGHWAYS
DIVISION OF HIGHWAYS STATE OF COLORADO
D.O.H. FORM NO. 134-1
APRIL 1927

AS CONSTRUCTED			
NO REVISIONS		REVISED 10-15-75	VOID

FEDERAL ROAD REGION NO.	DIVISION	PROJ. NO.	SHEET NO.	TOTAL SHEETS
VIII	COLORADO	FR 014-2(12)	14	32

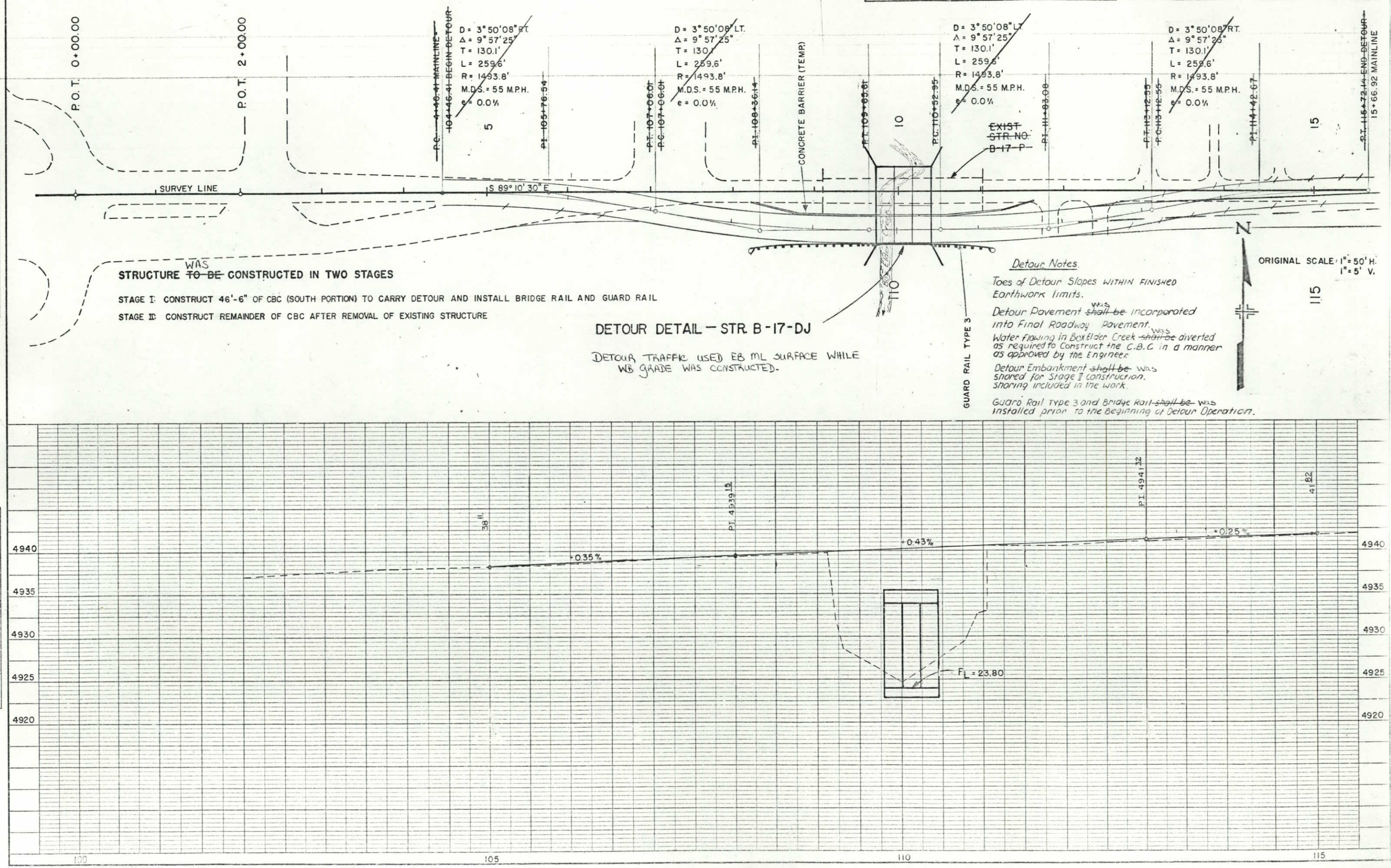

STRUCTURE ~~TO BE~~ WAS CONSTRUCTED IN TWO STAGES

STAGE I: CONSTRUCT 46'-6" OF CBC (SOUTH PORTION) TO CARRY DETOUR AND INSTALL BRIDGE RAIL AND GUARD RAIL

STAGE II: CONSTRUCT REMAINDER OF CBC AFTER REMOVAL OF EXISTING STRUCTURE

DETOUR DETAIL — STR. B-17-DJ

DETOUR TRAFFIC USED EB ML SURFACE WHILE WB GRADE WAS CONSTRUCTED.

Detour Notes.

Toes of Detour Slopes WITHIN FINISHED Earthwork limits.

Detour Pavement ~~shall be~~ was incorporated into Final Roadway Pavement.

Water Flowing in Box Elder Creek ~~shall be~~ was diverted as required to Construct the C.B.C. in a manner as approved by the Engineer.

Detour Embankment ~~shall be~~ was shored for Stage I construction. Shoring included in the work.

Guard Rail Type 3 and Bridge Rail ~~shall be~~ was installed prior to the Beginning of Detour Operation.

PLAN
NOTE BOOK No.
SURVEYED
PLOTTED
ALIGNMENT CHECKED
RT. OF WAY CHECKED
DATE
BY

PROFILE
NOTE BOOK No.
SURVEYED
PLOTTED
GRADES CHECKED
B.M.'S NOTED
STRUCTURE NOTATIONS CHECKED
BY
DATE

DIVISION OF HIGHWAYS, STATE OF COLORADO
D. O. H. FORM NO. 126
REV. FEB., 1977

FEDERAL ROAD REGION NO.	DIVISION	PROJ. NO.	SHEET NO.	TOTAL SHEETS
VIII	COLORADO	FR 014 - 2(12)	15	32

AS CONSTRUCTED

NO REVISIONS [ ] REVISED [ ] VOID [ ]

DETAIL OF MEDIAN TRANSITION AND PROFILE GRADE

ORIG. SCALE: 1" = 50'

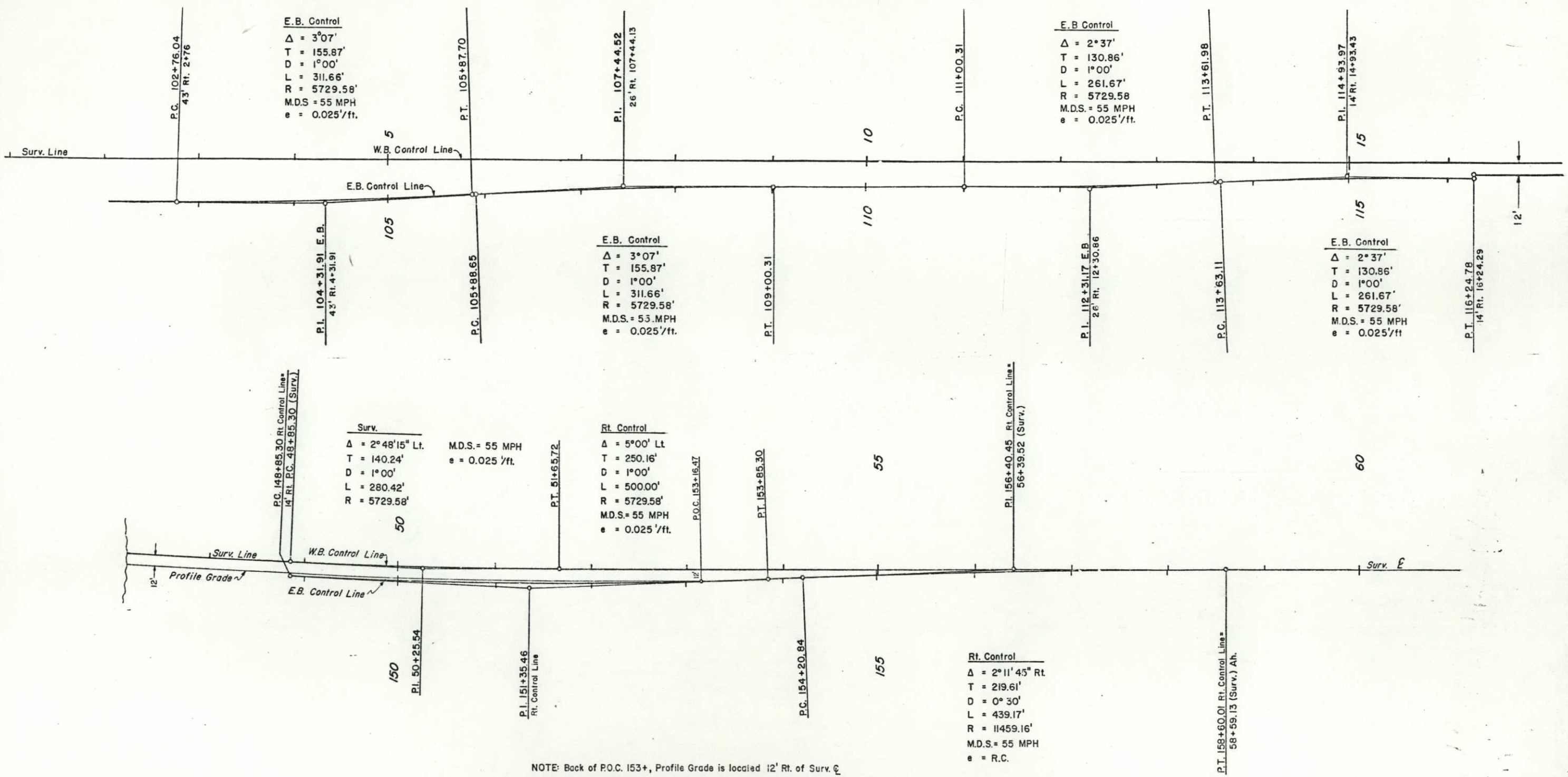

NOTE: Back of P.O.C. 153+, Profile Grade is located 12' Rt. of Surv. ℄
Ahead of P.O.C. 153+, Profile Grade follows along Rt. Control Line

STATE OF COLORADO
STATE DEPARTMENT OF HIGHWAYS
DIVISION OF HIGHWAYS:
D. O. H. FORM NO.126:
REV. FEB. 1984

AS CONSTRUCTED				FED.ROAD REGION	DIVISION	PROJ. NO.	SHEET NO.	SHEET TOTAL
NO REVISIONS	10-15-85	REVISED	VOID	VIII	COLO.	FR 014-2(12)	16	32

TRAFFIC DATA — TURNING MOVEMENTS

LOMALINDA DRIVE

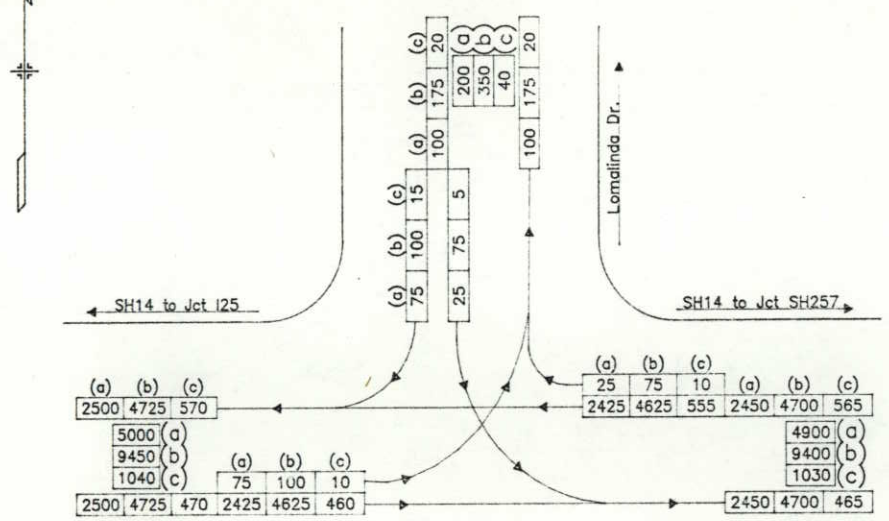

CAMINO DEL MUNDO

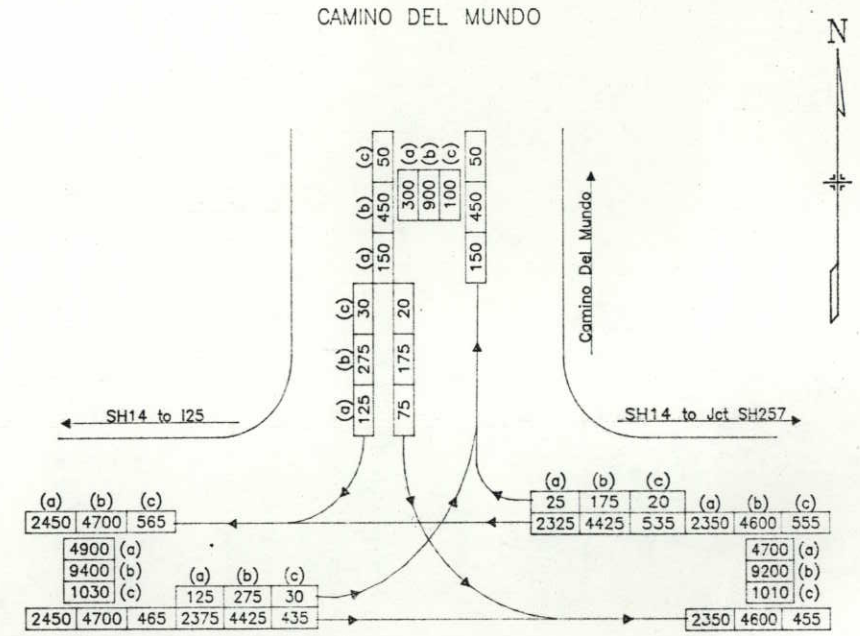

Traffic Legend

(a) = 1979 ADT

(b) = 2004 ADT

(c) = 2004 DHV

CAMINO REAL DRIVE

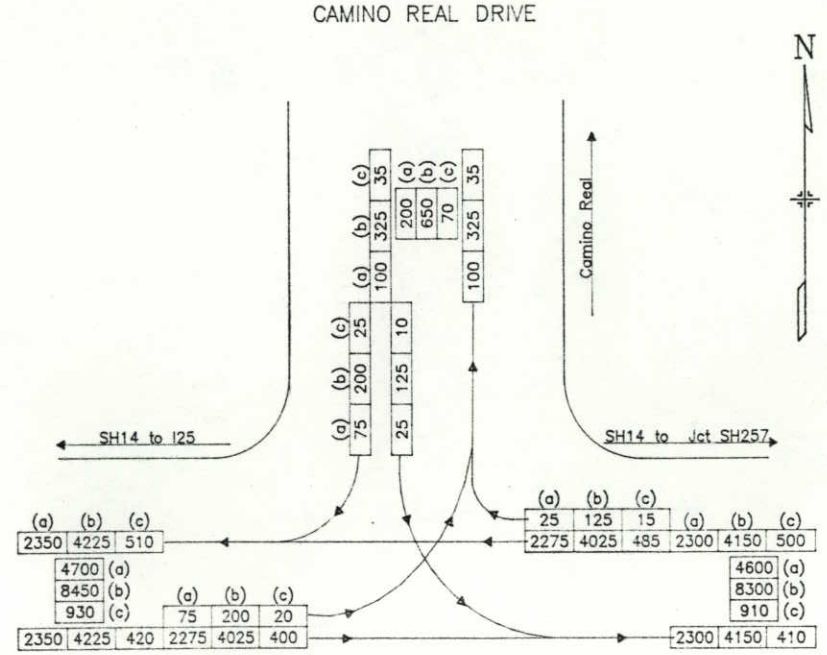

_DJA1 : (DRAW.PJ.80045.RDWY.H107.DETAIL) TRAFPB 08/30/84

STATE DEPARTMENT OF HIGHWAYS
DIVISION OF HIGHWAYS-STATE OF COLORADO
DOH FORM NO. 113
REV. MAR. 77

AS CONSTRUCTED			
NO REVISIONS		REVISED 10-15-85	VOID

FEDERAL ROAD REGION NO.	DIVISION	PROJ. NO.	SHEET NO.	TOTAL SHEETS
VIII	COLORADO	FR OK-2 (12)	17	32

REVISIONS		

BRIDGE STANDARD 0

GENERAL NOTES

ALL WORK SHALL BE DONE ACCORDING TO THE STANDARD SPECIFICATIONS OF THE DIVISION OF HIGHWAYS, STATE OF COLORADO, APPLICABLE TO THE PROJECT.

STRUCTURE EXCAVATION AND BACKFILL SHALL BE IN ACCORDANCE WITH STANDARD M-206-1, EXCEPT AS NOTED.

EXPANSION JOINT MATERIAL SHALL MEET AASHTO SPECIFICATION M-213.

GRADE 60 REINFORCING STEEL IS REQUIRED.

THE FOLLOWING TABLE GIVES THE MINIMUM LAP SPLICE LENGTH FOR REINFORCING BARS:

BAR SIZE	#4	#5	#6	#7	#8	#9	#10
SPLICE LENGTH FOR CLASS A CONCRETE	1'-0"	1'-3"	1'-8"	2'-3"	3'-0"	3'-10"	4'-10"

E.F. = EACH FACE
F.F. = FAR FACE
N.F. = NEAR FACE

FOR STRUCTURE NUMBER INSTALLATION, SEE STANDARD S-614-12.

STATIONS, ELEVATIONS, AND DIMENSIONS CONTAINED IN THESE PLANS ARE CALCULATED FROM A RECENT FIELD SURVEY AND THE "AS CONSTRUCTED" PLANS FOR STRUCTURE NUMBER B-17-P. THE CONTRACTOR SHALL VERIFY ALL DEPENDENT DIMENSIONS IN THE FIELD BEFORE REMOVING PORTIONS OF THE EXISTING STRUCTURE OR DRIVING PILING.

MAXIMUM DESIGN FILL HEIGHT = 5'-0"

DESIGN DATA

CURRENT AASHTO SPECIFICATIONS:

LIVE LOAD: AASHTO HS-20-44 AND INTERSTATE ALTERNATE.
DEAD LOAD: EARTH LOAD = 84 LBS./CU. FT.
EQUIVALENT FLUID PRESSURE = 30 LBS./CU. FT.

REINFORCED CONCRETE:

CLASS A CONCRETE: f_c = 1,200 psi, n = 9

REINFORCING STEEL: f_s = 24,000 psi

STRUCTURAL STEEL: AASHTO M-183 (ASTM A-36) f_s = 20,000 psi

INITIAL	DATE		INITIAL	DATE
DESIGNED BY	JMD	1-82	CHECKED BY	JWB 7-82
CHECKED BY	MEP	7-82	QUANTITIES BY	KGS 7-82
DETAILED BY	SG	6-82	CHECKED BY	JMD 7-82

SUMMARY OF QUANTITIES

Item No.	Description	Unit	PLAN Total	FINAL Total
202	Removal of Portions of Present Structure	Each	1	1
206	Structure Excavation	Cu.Yd.	1710	1710
206	Structure Backfill (Class 2)	Cu.Yd.	710	710
206	Filter Material (Class B)	Cu.Yd.	25	25
502	End Plate	Each	76	76
(1) 502	Steel Pipe Piling (10 3/4 inch x 0.219)	Lin.Ft.	1173	990
(1) 502	Steel Pipe Piling (12 3/4 inch x 0.219)	Lin.Ft.	2491	2022
502	Steel Pipe Piling (10 3/4 inch x 0.219) Cut-off (>1' <6')	Lin.Ft.	Ø	12
502	Steel Pipe Piling (12 3/4 inch x 0.219) cut-off	Lin.Ft.	Ø	32
(2) 601	Concrete Class A (Box Culvert)	Cu.Yd.	886	886
602	Reinforcing Steel	Lb.	129,615	131,290
606	Bridge Rail Type 3R	Lin.Ft.	152	152

(1) Includes ~~105~~ 95 cu. yd. Concrete Class A (Box Culvert) to fill pipe piles.
(2) Includes ~~117~~ 116 cu. yd. for Retaining Walls

INDEX OF DRAWINGS

DWG. NO. B 1 GENERAL INFORMATION - SUMMARY OF QUANTITIES
DWG. NO. B 2 GENERAL LAYOUT
DWG. NO. B 3 ENGINEERING GEOLOGY
DWG. NO. B 4 PILING LAYOUT AND EXISTING PIER REMOVAL DETAILS
DWG. NO. B 5 TRIPLE CONCRETE BOX CULVERT
DWG. NO. B 6 RETAINING WALL DETAILS TYPE 1
DWG. NO. B 7 MISCELLANEOUS DETAILS
DWG. NO. B 8 BRIDGE RAIL TYPE 3R

BRIDGE DESCRIPTION

3 CELL (21'-3", 21'-3", 21'-3" X 10'-0" X 91'-0")
CONCRETE BOX CULVERT
OVER BOXELDER CREEK
90° 00'00" SKEW
TYPE 3 BRIDGE RAIL

CROSS REFERENCE DRAWING NUMBER
B
SECTION OR DETAIL IDENTIFICATION

JAMES E. SIEBELS
PROFESSIONAL ENGINEER
9748
STATE OF COLORADO

Approved J E Siebels 8-27-82
BRIDGE ENGINEER DATE

DIVISION OF HIGHWAYS

GENERAL INFORMATION
SUMMARY OF QUANTITIES

Station 10+06.67
Station
Near Ft. Collins Sec 10 & 15 T 7N R 68W
Designer J. DeLand | Structure Numbers B-17-DU
Detailer S. Greene
Drawing Number B of 8 Drawings

(11 - 1 - 79)

Revision Dates (Preliminary Stage Only) 0

DIVISION OF HIGHWAYS-STATE OF COLORADO
DOH FORM NO. 117
REV. MAR. 73

AS CONSTRUCTED			
NO REVISIONS		REVISED	VOID

FEDERAL ROAD REGION NO.	DIVISION	PROJ. NO.	SHEET NO.	TOTAL SHEETS
VIII	COLORADO	FR 014-2(12)	18	32

REVISIONS		

	INITIAL	DATE
DESIGNED BY	JVP	1-82
CHECKED BY	MEP	7-82
DETAILED BY	SG	7-82

CHECKED BY	JVP	7-82
QUANTITIES BY	KCS	7-82
CHECKED BY	SG	7-82
CHECKED BY	JMD	7-82

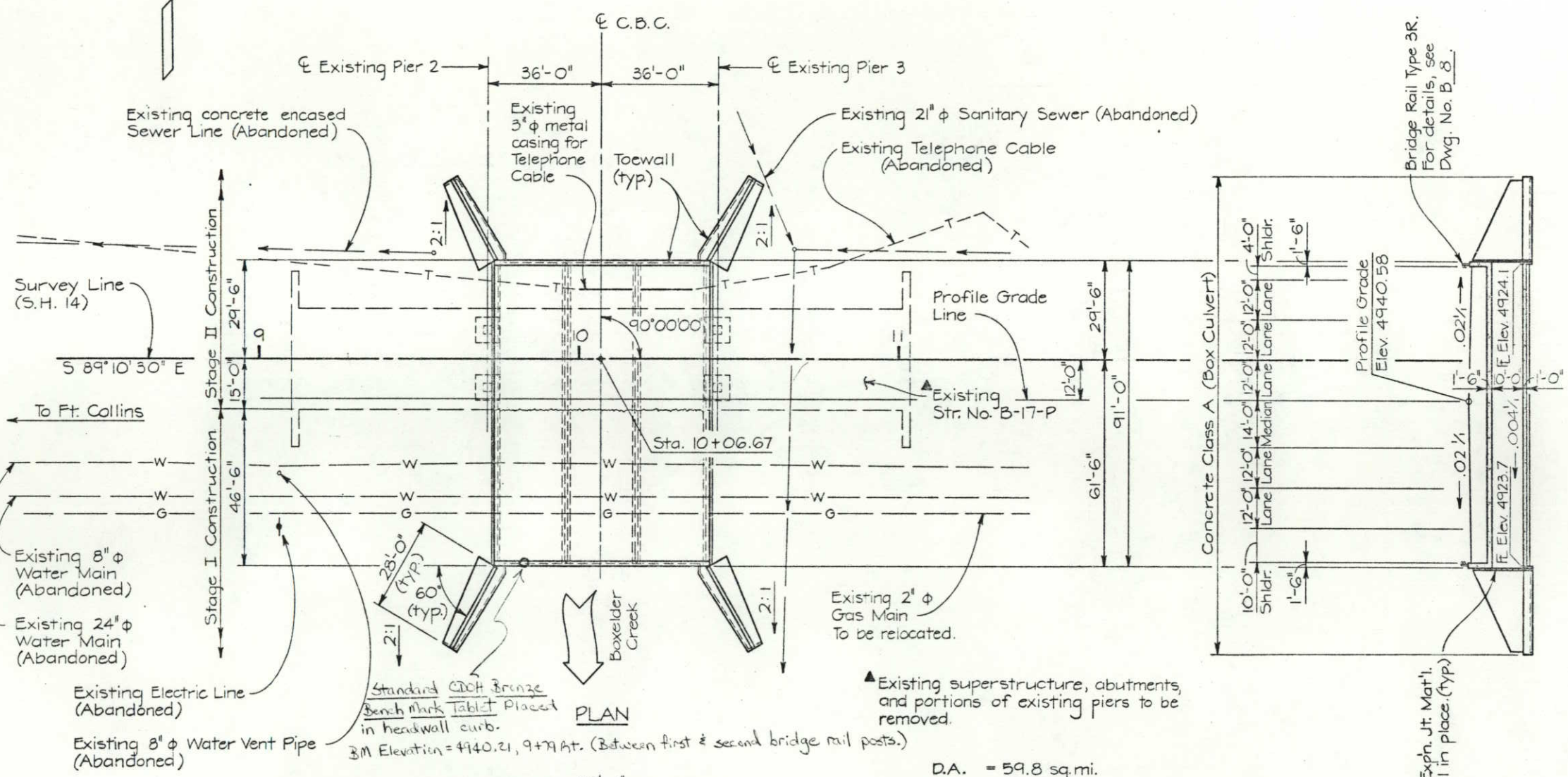

SECTION
Taken at ℄ C.B.C.

D.A. = 59.8 sq. mi.
Q100 = 3840 cfs
H.W. = 4930.4
A.H.W. = 4933.0

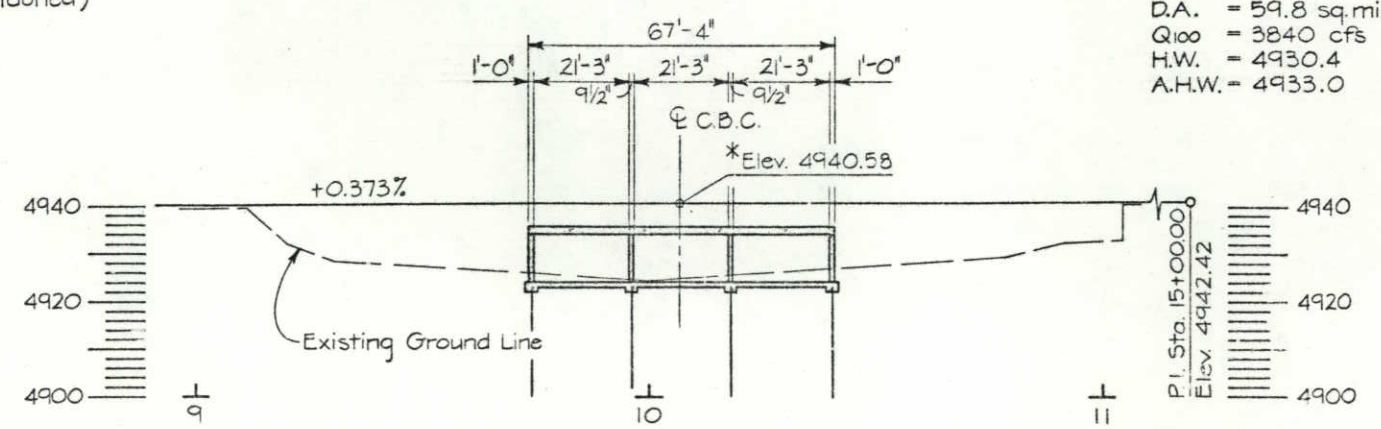

SECTION
Taken at Profile Grade Line
*Finished Roadway Elevation

Live Loading: HS20-44 and Interstate Alternate

DIVISION OF HIGHWAYS

GENERAL LAYOUT

Designer	J. DeLand	Structure Numbers	B-17-DJ
Detailer	S. Greene		
Drawing Number B 2	of 8	Drawings	

Revision Dates (Preliminary Stage Only)

K&E 10 7185 8-75 MC 8410

DOH FORM NO. 160
REVISED: JANUARY 1979

AS CONSTRUCTED		
NO REVISIONS 10-15-85	REVISED	VOID

FED. ROAD REG. NO.	DIVISION	PROJECT NO.	SHEET NO.	TOTAL SHEETS
VIII	COLORADO	FR 014-2(12)	19	32

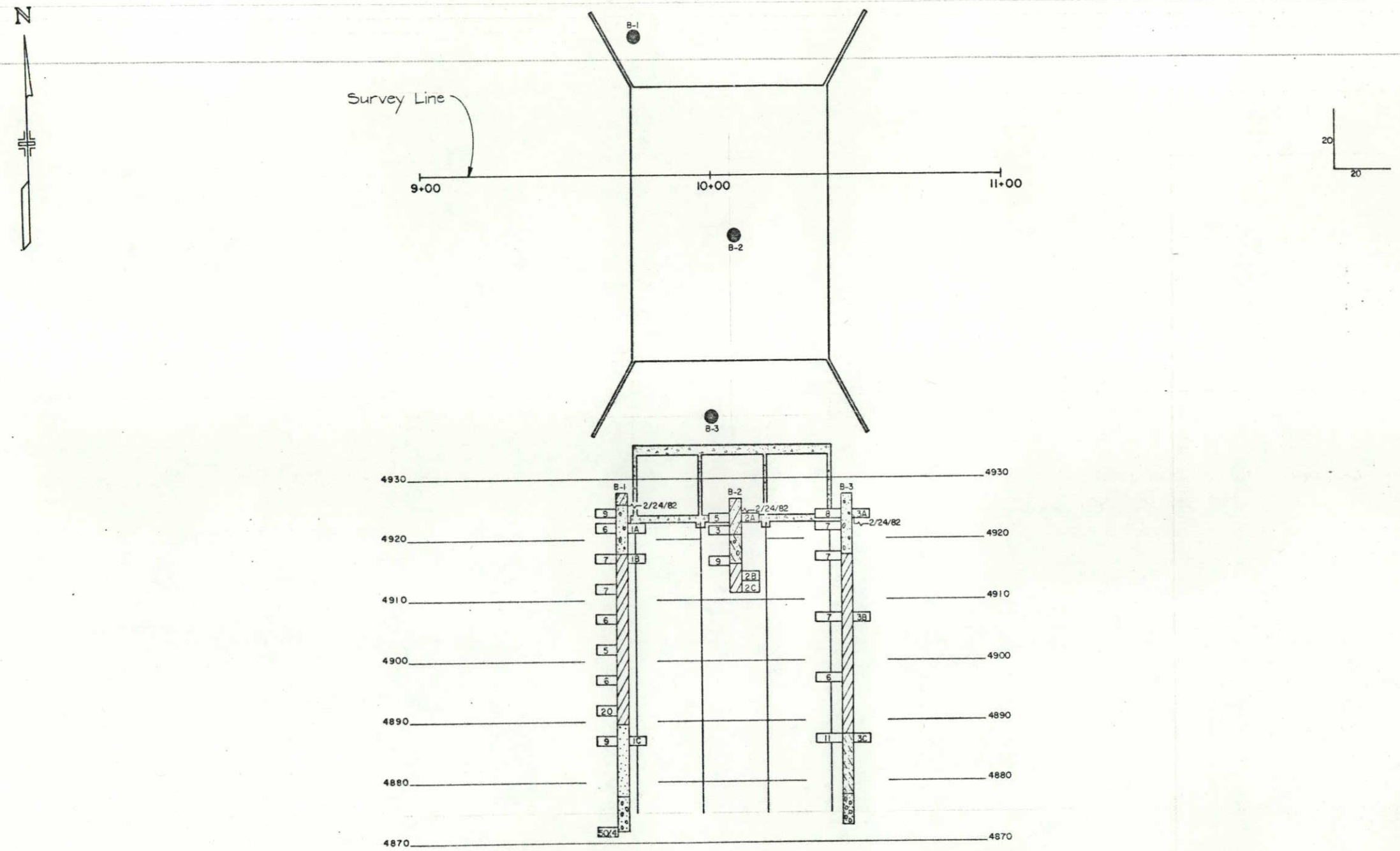

SUMMARY OF TEST RESULTS

Sample No.	Depth	Classification: Corps of Engrs or Visual	Classification: AASHTO	Grading Analysis Percent: Gravel	Coarse Sand	Fine Sand	Silt and Clay	Atterberg Limits: Liquid Limit W_L	Plastic Limit P_L	Plastic Index I_P	Water Cont W %	Wet Unit Weight γ P.C.F.	Unconfined Strength Q_u T.S.F.	Triaxial Shear Strength: φ	C P.S.I.	Dia. of Sample (Inches)
1A	5.0-6.5	GRAVELLY SAND	A-1-6(0)	22	30	36	12	NV	NP	NP	15.5					
1B	10.0-11.5	CLAY	A-7-6(34)	0	0	5	95	54	22	32	30.1					
1C	40.0-41.5	SAND	A-3(0)	6	39	48	7	NV	NP	NP	17.9					
2A	2.5-4.0	SANDY CLAY	A-2-6(0)	31	15	21	33	23	18	11	16.4					
2B	12.0-13.5	CLAY	A-7-6(25)	0	0	7	93	44	18	26	25.1					
2C	13.5-15.5	CLAY	A-6(15)	0	0	21	79	38	18	20	27.4					
3A	2.5-4.0	GRAVELLY SAND	A-1-6(0)	22	66	9	3	NV	NP	NP	9.3					
3B	19.5-21.0	CLAY	A-7-6(23)	0	0	9	91	43	18	25	27.9					
3C	39.5-41.0	SILTY SAND	A-2-4(0)	0	1	77	22	NV	NP	NP	22.5					

TYPE OF MATERIAL

- CLAY
- GRAVELLY SAND
- SANDY CLAY
- SANDY GRAVEL
- SILTY SAND
- SAND
- SILTY GRAVELLY SAND

LEGEND

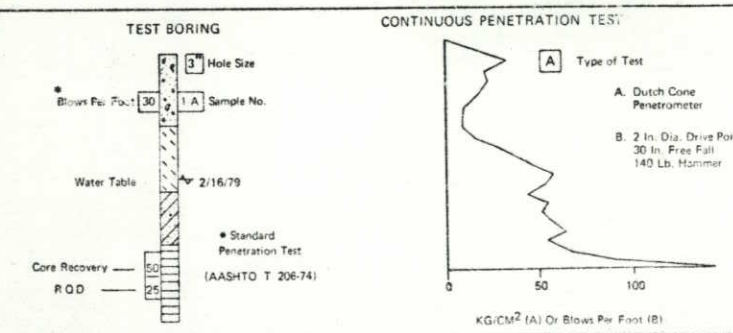

- Location of Test Boring
- Location of Continuous Penetration Test
- Rotary Boring
- Auger Boring

DIVISION OF HIGHWAYS

ENGINEERING GEOLOGY

BOXELDER CREEK

Geologist LB
Drawn by TC
Checked by LB
Date MAY 4, 1982

STRUCTURE NO. B-17-DJ
DWG. NO. B 3 OF 8

STATE DEPARTMENT OF HIGHWAYS
DIVISION OF HIGHWAYS-STATE OF COLORADO
DOH FORM NO. 117
REV. MAR. 77

AS CONSTRUCTED			
NO REVISIONS		REVISED 11-15-85	VOID

FEDERAL ROAD REGION NO.	DIVISION	PROJ. NO.	SHEET NO.	TOTAL SHEETS
VIII	COLORADO	FR 014-2 (12)	20	32

REVISIONS		

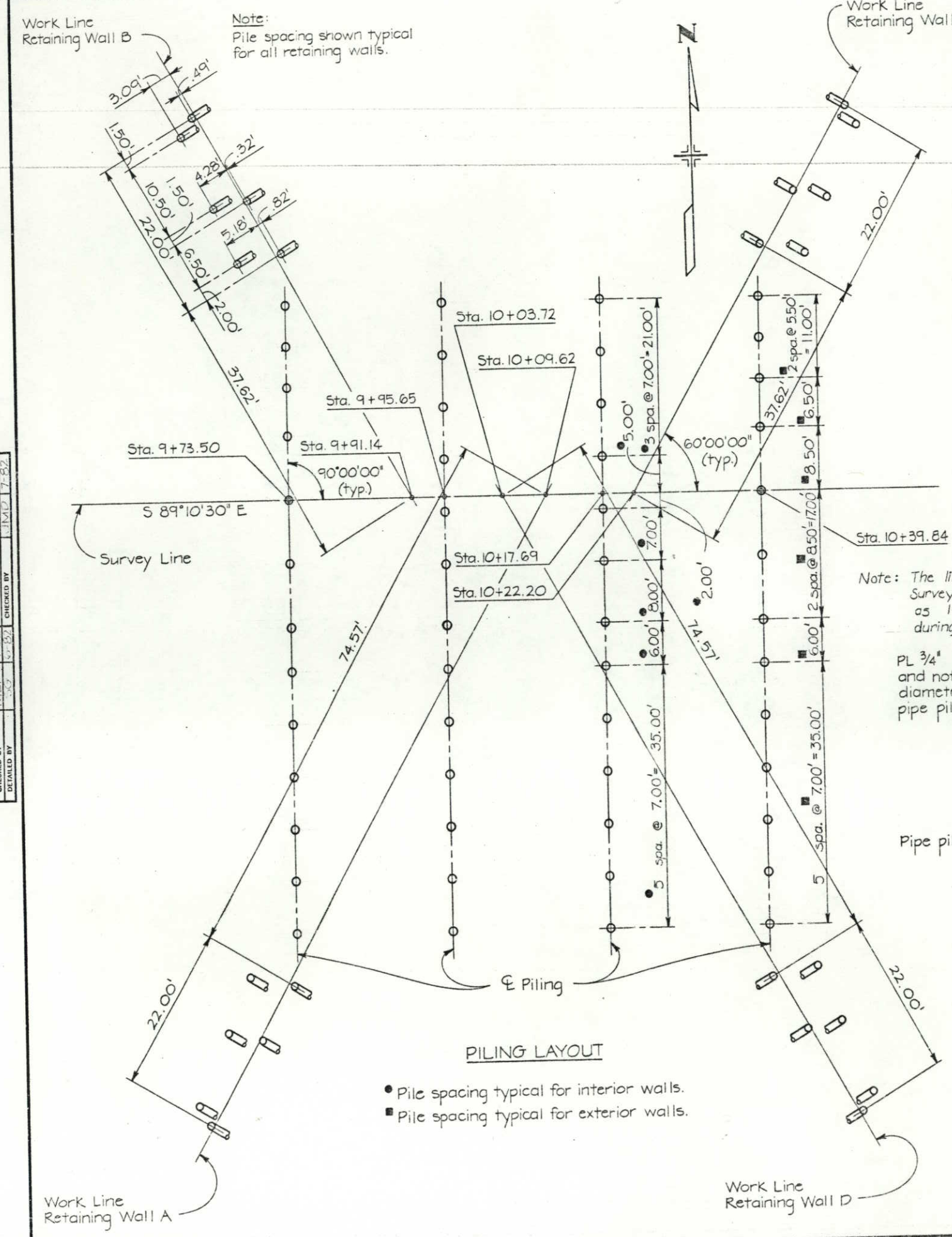

PILING LAYOUT

• Pile spacing typical for interior walls.
▪ Pile spacing typical for exterior walls.

Note: The line of piles 17' to the south of the Survey Line ~~may be~~ were battered as much as 1:12 to facilitate driving these piles during Stage I Construction.

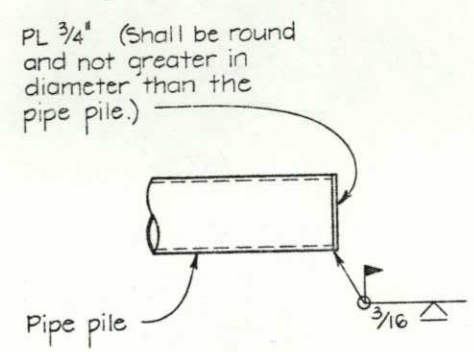

PIPE PILE END PLATE DETAIL

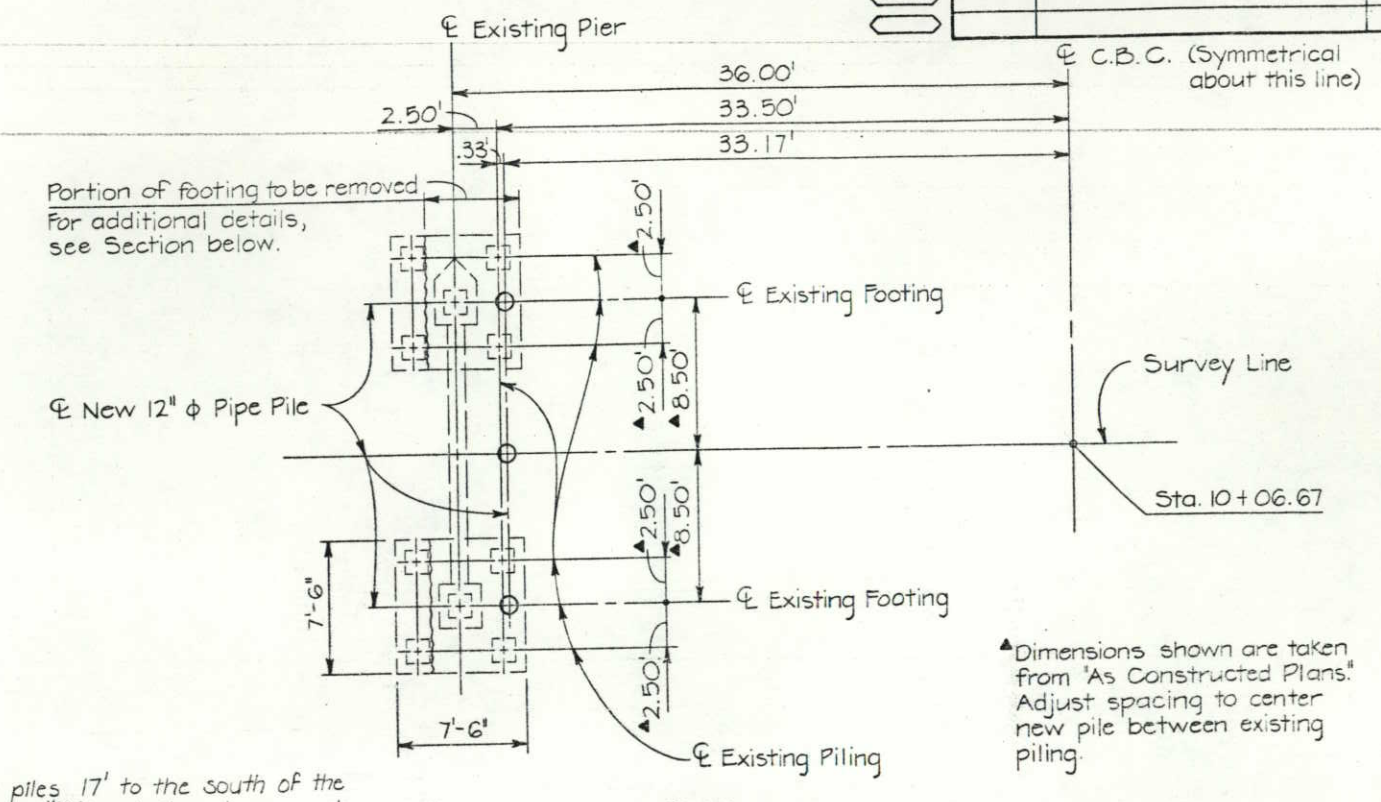

▲Dimensions shown are taken from "As Constructed Plans." Adjust spacing to center new pile between existing piling.

PLAN

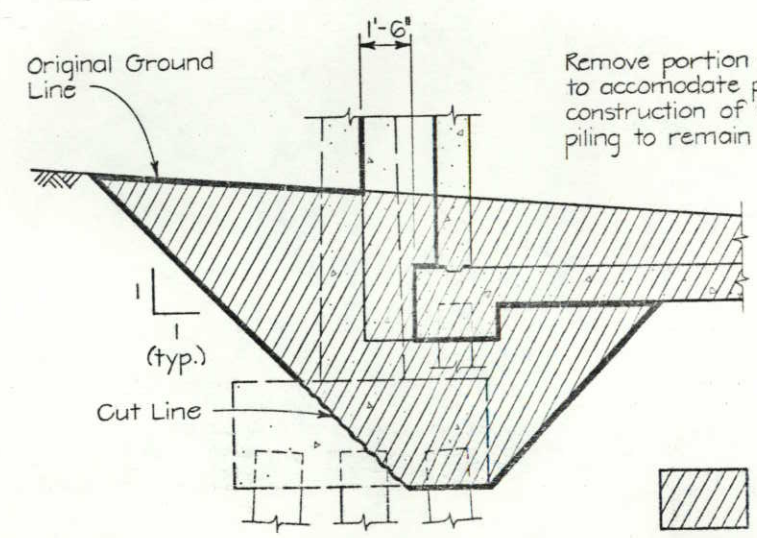

Remove portion of existing pier to accomodate pile driving and construction of C.B.C.. Existing piling to remain in place.

SECTION

EXISTING PIER REMOVAL DETAILS

Structure Excavation

Structure Backfill (Cl. 2)

Notes:

The piling dimensions shown are at the bottom of the concrete.

C.B.C. piling shall be End Bearing Steel Pipe Piling (12-3/4 inch x 0.219) with a Maximum Pile Load of 66 tons and an ~~Estimated~~ Approximate Tip Elevation of ~~4875~~. 4885.

Retaining Wall piling shall be End Bearing Steel Pipe Piling (10-3/4 inch x 0.219) with a Maximum Pile Load of 48 tons and an ~~Estimated~~ Approximate Tip Elevation of ~~4875~~. 4881.

▭ Indicates piling to be battered, 1:4 in the direction shown.

DESIGNED BY	INITIAL JMD	DATE 1-85	CHECKED BY JWB 7-82
CHECKED BY	MEP	7-85	QUANTITIES BY NGS 7-82
DETAILED BY	SG	6-85	CHECKED BY JML 7-82

DIVISION OF HIGHWAYS

PILING LAYOUT
AND
EXISTING PIER REMOVAL DETAILS

Designer J. DeLand		Structure Numbers	8-17-DJ
Detailer S. Greene			
Drawing Number B 4	of 8		Drawings

Revision Dates (Preliminary Stage Only)

STATE OF COLORADO
DEPARTMENT OF HIGHWAYS
DIVISION OF HIGHWAYS
DOH FORM NO. 117
REV. MAR. 1977

AS CONSTRUCTED			
NO REVISIONS	10-15-85	REVISED	VOID

FEDERAL ROAD REGION NO.	DIVISION	PROJ. NO.	SHEET NO.	TOTAL SHEETS
VIII	COLORADO	FR 014-2 (12)	21	32

REVISIONS		

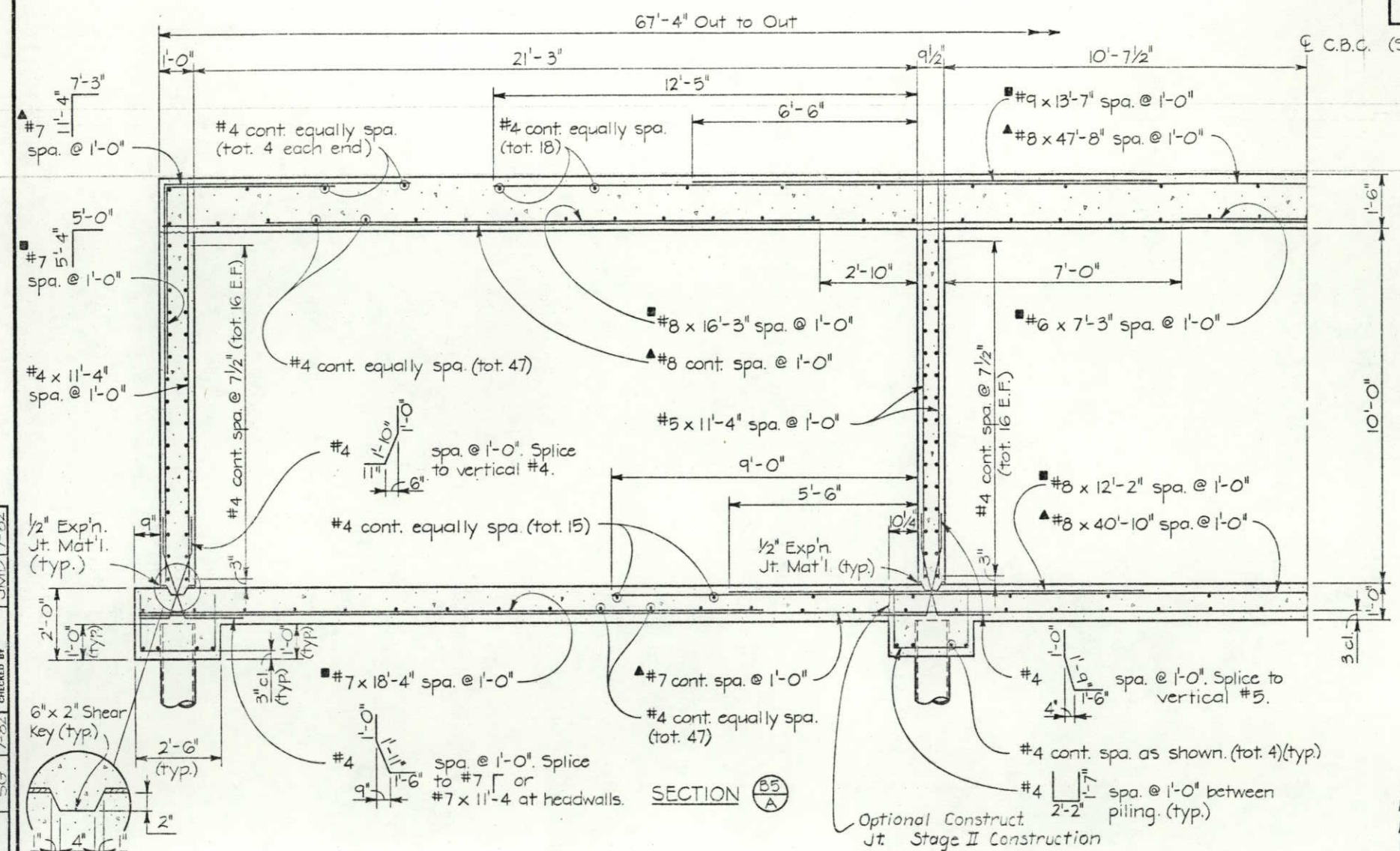

PLAN

For Retaining Wall details, see Dwg. No. B 6 and B 7.

Note: Walls must be supported laterally until after top slab has cured for one day.

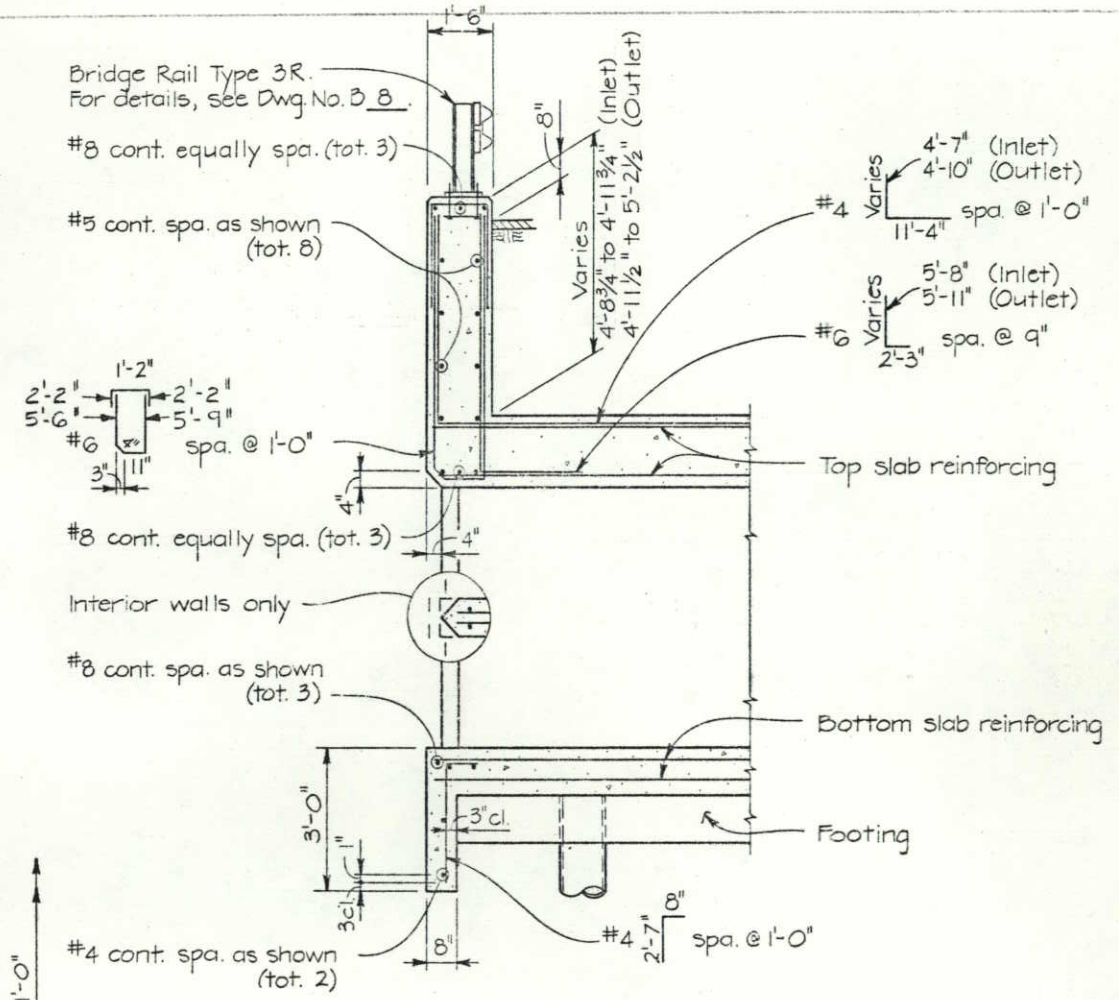

SECTION B5 B

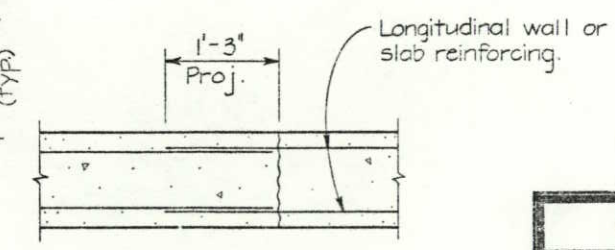

CONSTRUCTION JOINT

Shall be provided as required.

DESIGNED BY	INITIAL JMP	DATE 1-82	
CHECKED BY	MEP	7-82	
DETAILED BY	SG	7-82	
CHECKED BY			
QUANTITIES BY	JWB	7-82	
CHECKED BY	KGS	7-82	
	CG	7-82	
	JMD	7-82	

DIVISION OF HIGHWAYS

TRIPLE
CONCRETE BOX CULVERT

Designer J. DeLand		Structure Numbers	B-17-DJ
Detailer S. Greene			
Drawing Number B 5	of 8	Drawings	

Revision Dates (Preliminary Stage Only)

STATE DEPARTMENT OF HIGHWAYS
DIVISION OF HIGHWAYS—STATE OF COLORADO
DOH FORM NO. 117
REV. DEC. 1972

AS CONSTRUCTED		
NO REVISIONS 10-15-85	REVISED	VOID

FEDERAL ROAD REGION NO.	DIVISION	PROJ. NO.	SHEET NO.	TOTAL SHEETS
VIII	COLORADO	FR 014-2(12)	22	32

REVISIONS		

	INITIAL	DATE	CHECKED BY	DATE	CHECKED BY	DATE
DESIGNED BY	JMD	1-82	JWB	7-82	JMD	7-82
CHECKED BY	MEP	7-82	KDS	7-82		
DETAILED BY	CG	7-82	SK	7-82		

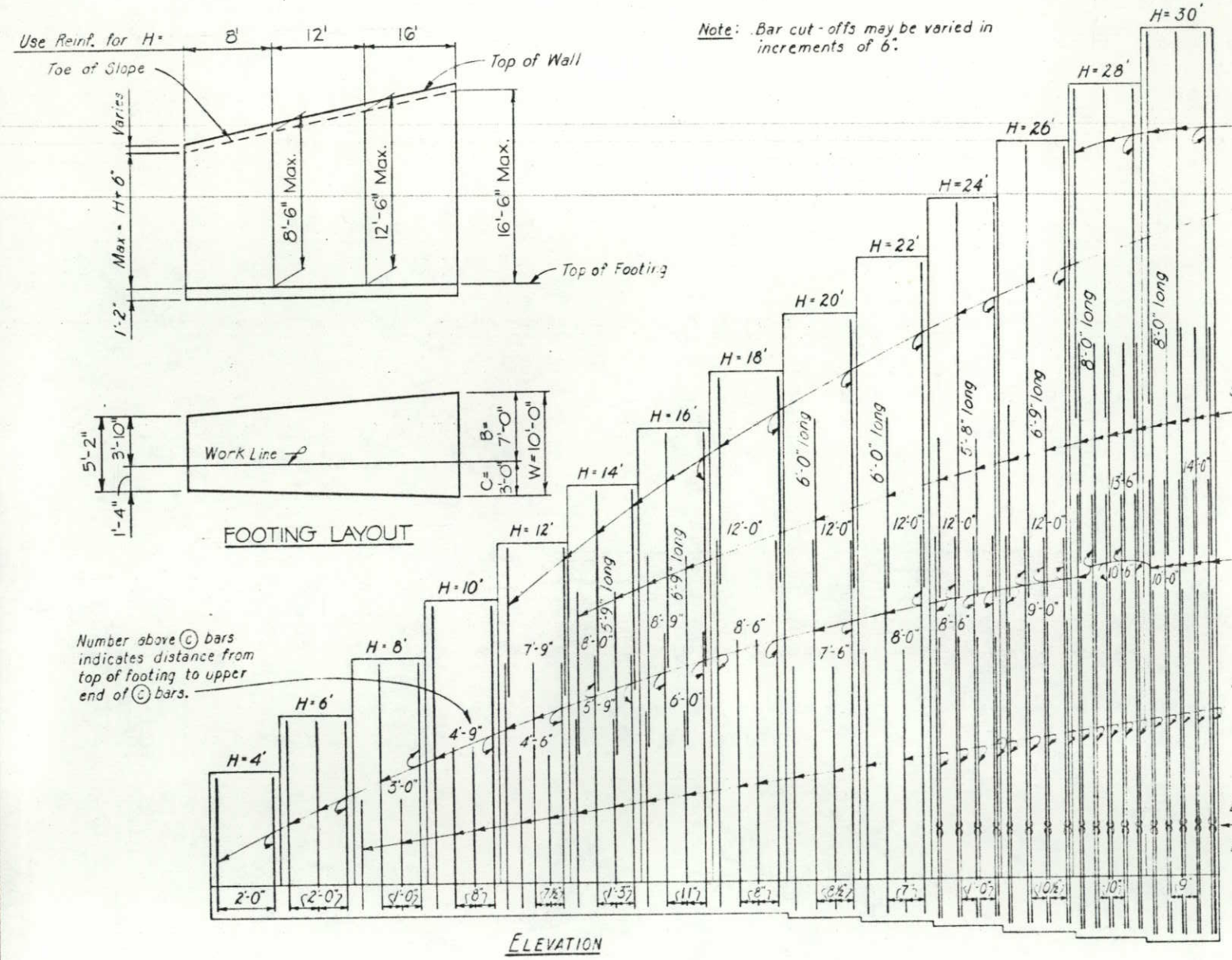

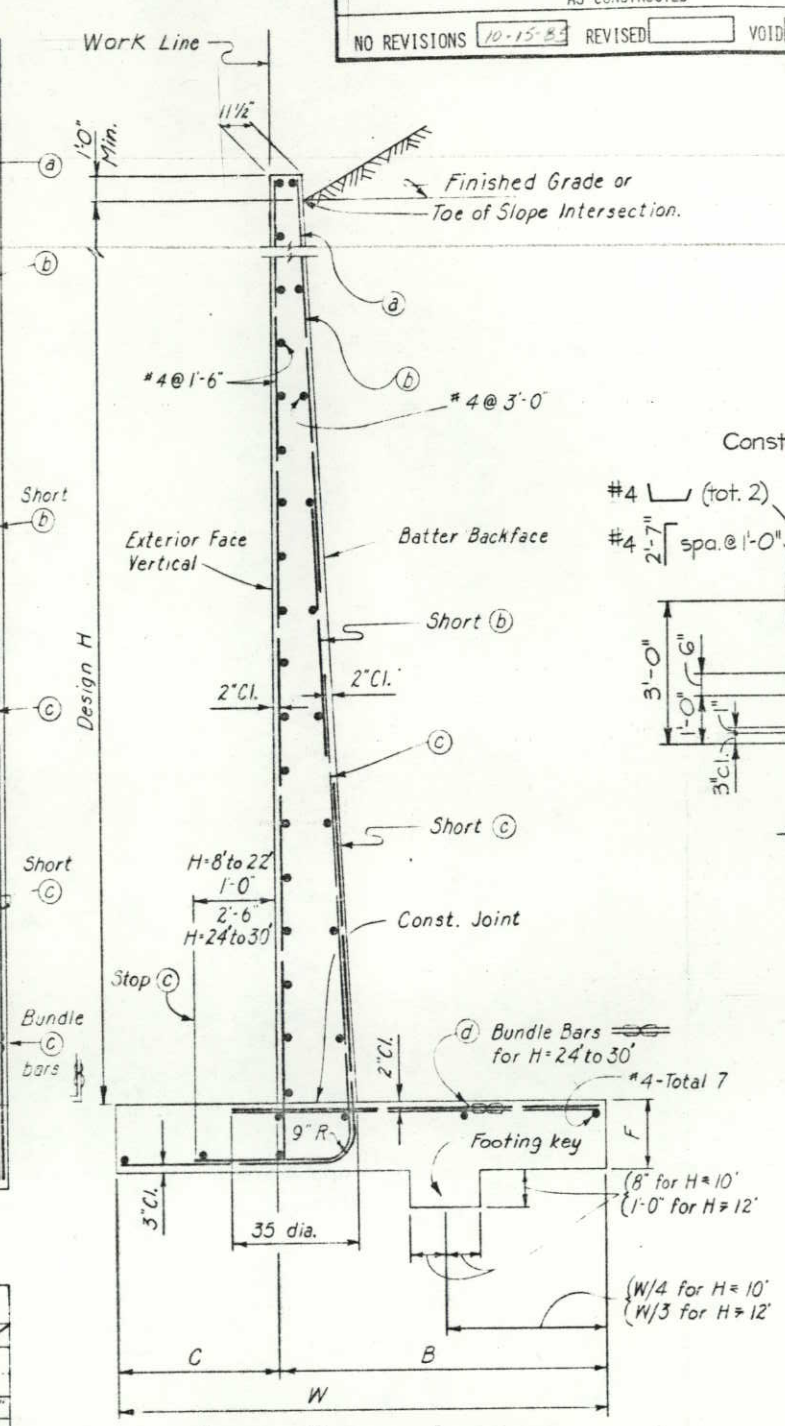

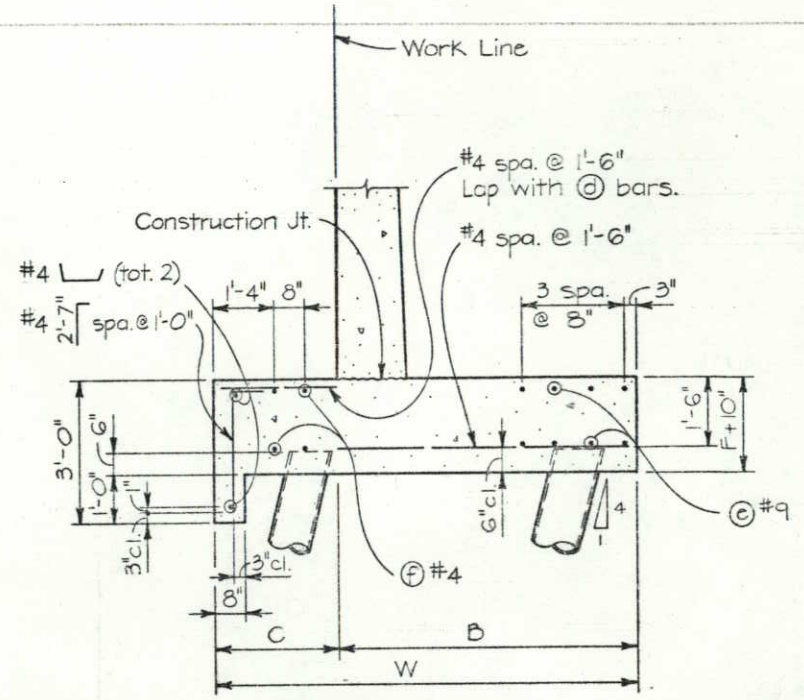

TABLE OF REINFORCING STEEL DIMENSIONS AND DATA

Design H		▲ 4'	6'	8'	10'	12'	14'	16'	18'	20'	22'	24'	26'	28'	30'
W		3'-2"	4'-2"	6'-2"	6'-2"	8'-2"	8'-0"	10'-0"	10'-0"	11'-0"	12'-0"	13'-3"	14'-3"	15'-3"	16'-3"
C		1'-0"	1'-4"	1'-8"	2'-0"	2'-4"	2'-8"	3'-0"	3'-4"	3'-8"	4'-0"	4'-5"	4'-9"	5'-1"	5'-5"
B		2'-2"	2'-10"	4'-6"	4'-2"	5'-10"	5'-4"	7'-0"	6'-8"	7'-4"	8'-0"	8'-10"	9'-6"	10'-2"	10'-10"
F Spread Footing		1'-2"	1'-2"	1'-2"	1'-2"	1'-2"	1'-2"	1'-2"	1'-2"	1'-4"	1'-6"	1'-8"	1'-11"	2'-2"	2'-4"
Batter		½:12	½:12	½:12	½:12	½:12	½:12	½:12	½:12	½:12	½:12	⅝:12	⅝:12	¾:12	⅞:12
(a) bars														#7@1'-8"	#7@1'-6"
(b) bars						#5@2'-6"	#5@1'-3"	#5@11"	#6@2'-0"	#7@1'-5"	#7@1'-2"	#8@1'-0"	#8@10½"	#9@10"	#9@9"
(c) bars		#5@2'-0"	#5@2'-0"	#5@1'-0"	#5@8"	#6@7½"	#10@1'-3"	#10@11"	#10@8"	#11@8½"	#11@7"	#11@1'-0"ℵ	#11@10½"ℵ	#11@10"ℵ	#11@9"ℵ
(d) bars		#5@2'-0"	#5@2'-0"	#4@1'-0"	#4@8"	#5@7½"	#9@1'-3"	#9@11"	#9@8"	#10@8½"	#10@7"	#10@1'-0"ℵ	#10@10½"ℵ	#9@10"ℵ	#9@9"ℵ
Total (e) bars				8		8		8							
Total (f) bars				4		4		4							
2' level surcharge	Toe Pr. Ksf	1.4	1.8	2.2	2.5	2.8	3.1	3.5	3.8	4.1	4.6	4.7	5.3	5.7	6.2
2:1 unlimited slope	Toe Pr. Ksf	1.1	1.5	2.0	2.5	2.9	3.4	3.8	4.3	4.8	5.5	5.9	6.5	7.1	7.8
1½:1 limited slope	Toe Pr. Ksf	1.5	1.9	2.4	2.8	3.5	3.8	4.2	4.6	4.9	5.5	5.8	6.4	6.9	7.5
Spread Footing & Wall	Reinf. Lbs./L.F.	16	20	26	36	54	63	114	165	158	264	320	386	416	477
	Conc. Cu.Yd./L.F.	0.330	0.463	0.604	0.746	0.941	1.089	1.252	1.422	1.687	1.930	2.344	2.711	3.263	3.841
Pile Footing & Wall	Reinf. Lbs./L.F.			76		120		223							
	Conc. Cu.Yd./L.F.			.863		1.221		1.592							

ℵ Denotes a bundle of two bars.

NOTES:

QUANTITIES APPLY TO THE DESIGN H PORTION AND EXCLUDE THE ADDED PORTION ABOVE "FINISHED GRADE OR TOE OF SLOPE SECTION".

DESIGN H MAY BE EXCEEDED BY 6" BEFORE GOING TO THE NEXT SIZE. FOOTING KEY IS REQUIRED EXCEPT WHEN FOUND UNNECESSARY BY THE ENGINEER.

SPECIAL FOOTING DESIGN IS REQUIRED WHEN FOUNDATION MATERIAL IS INCAPABLE OF SUPPORTING TOE PRESSURE LOADS LISTED IN TABLE.

FOR ADDITIONAL RETAINING WALL DETAILS, SEE DWG. NO. B 7.

DESIGN DATA:
AASHTO 1973 UNIT STRESSES EXCEPT AS NOTED.
f_c = 1200 psi
f_s = 20,000 psi
n^s = 10
EARTH = 120 pcf, 2' SURCHARGE

EQUIVALENT FLUID PRESSURE = { 36 pcf MAX. FOR DETERMINATION OF TOE PRESSURE. / 27 pcf MIN. FOR DETERMINATION OF HEEL PRESSURE.

EARTH PRESSURE FOR 2:1 UNLIMITED SLOPE, AND 1 1/2:1 SLOPE IS DETERMINED FROM RANKINE'S FORMULA WITH ϕ = 33° 42'.

Note: Reinforcement detailed is to be placed in addition to that shown for spread footing. All piles not shown, see Pile Layout on other sheets.
▲ For pile footing Design H=4' use same footing dimension as Design H=6'.

DIVISION OF HIGHWAYS

RETAINING WALL DETAILS

TYPE 1

Designer J. DeLand		Structure Numbers	S-17-DJ
Detailer S. Greene			
Drawing Number B 6	of 8	Drawings	

Revision Dates (Preliminary Stage Only)

STATE OF COLORADO
DEPARTMENT OF HIGHWAYS
DIVISION OF HIGHWAYS
DOH FORM NO. 117
REV. MAR. 1977

AS CONSTRUCTED		
NO REVISIONS 10-1-82	REVISED	VOID

FEDERAL ROAD REGION NO.	DIVISION	PROJ. NO.	SHEET NO.	TOTAL SHEETS
VIII	COLORADO	FR 014-2 (12)	23	32

REVISIONS		

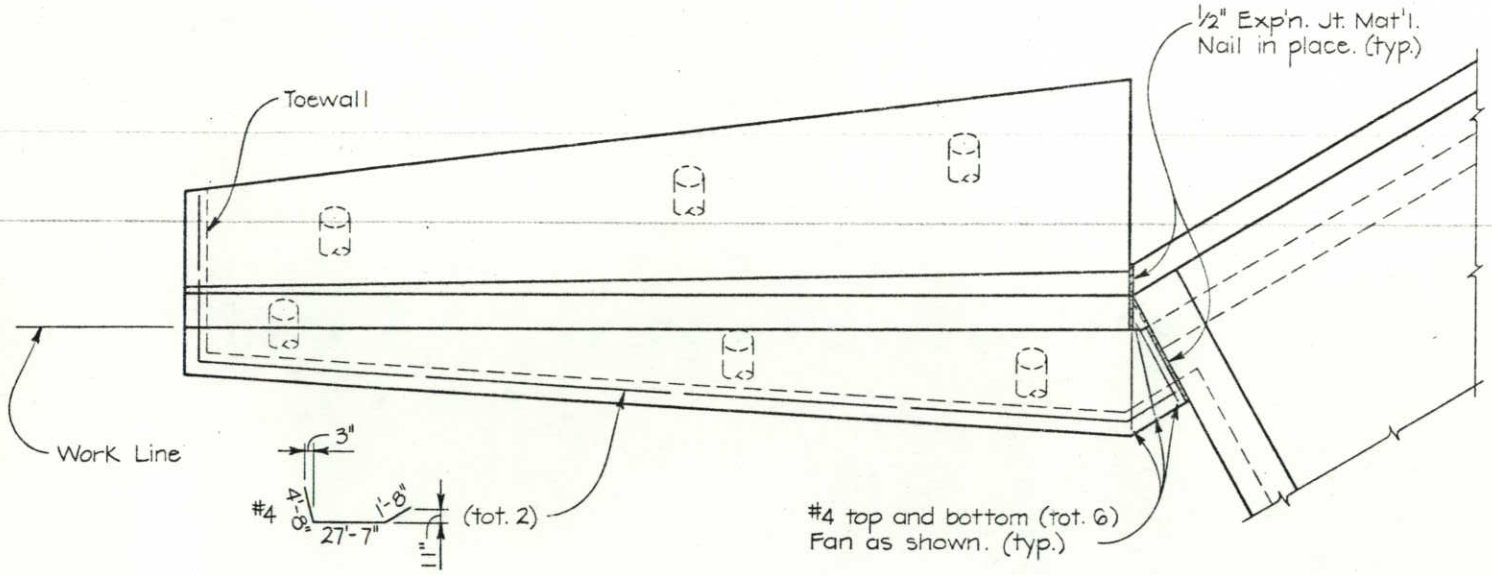

PLAN

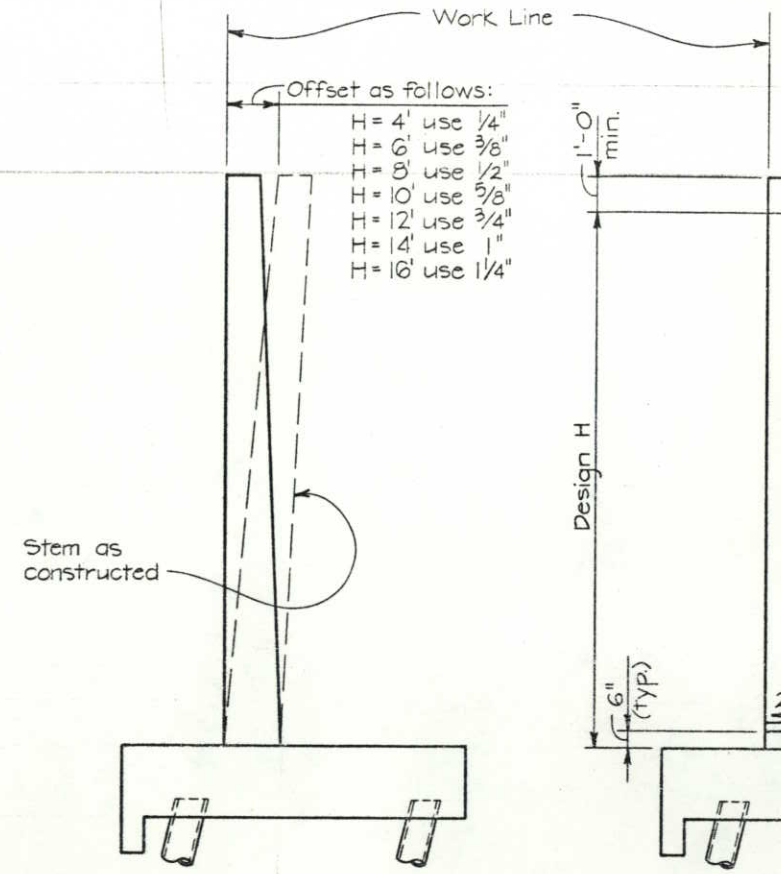

APPROXIMATE WALL OFFSETS

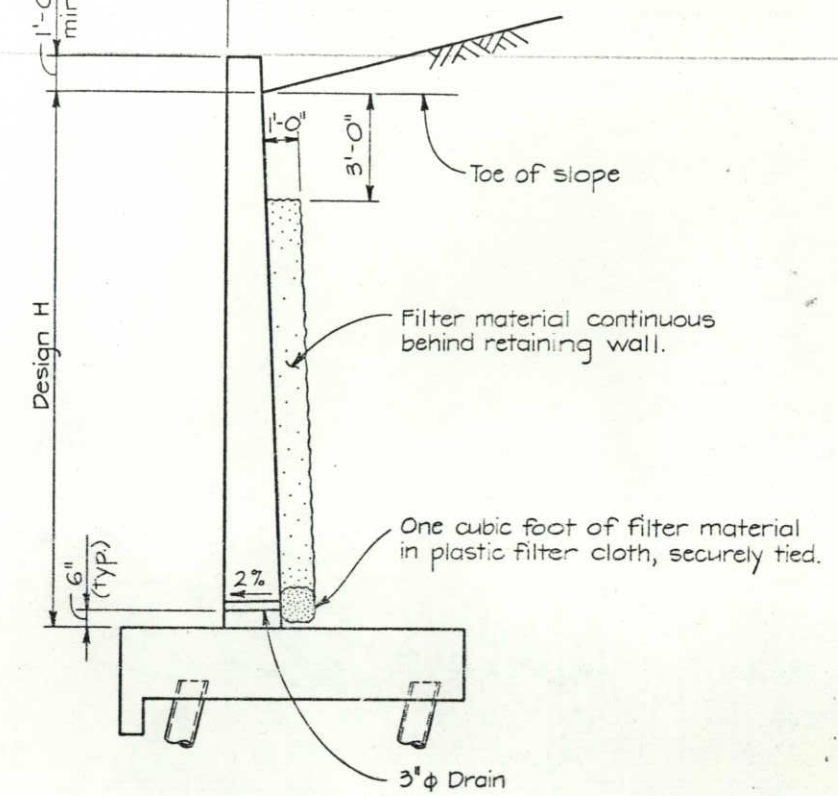

DESIGN AND DRAINAGE

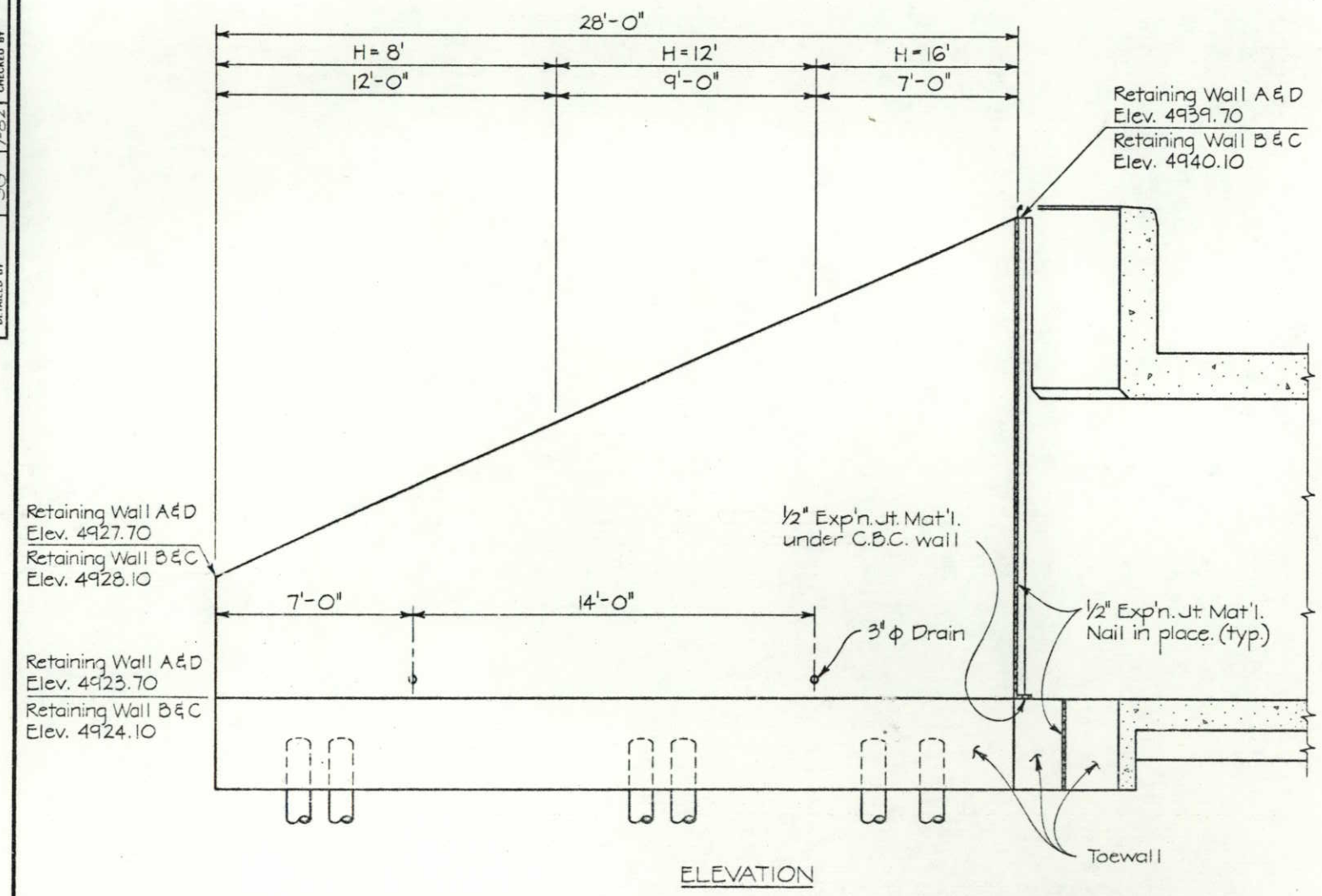

ELEVATION

	INITIAL	DATE	CHECKED BY	DATE
DESIGNED BY	JMD	1-82	JWB	7-82
CHECKED BY	MEP	7-82	KGS	7-82
DETAILED BY	SG	7-82	SG	7-82
			QUANTITIES BY	JMD
			CHECKED BY	7-82

Note:
For additional retaining wall details, see Dwg. No. B 6.

DIVISION OF HIGHWAYS

MISCELLANEOUS DETAILS

Designer J. DeLand		Structure Numbers	B-17-DJ
Detailer S. Greene			
Drawing Number B 7	of 8	Drawings	

Revision Dates (Preliminary Stage Only)

AS CONSTRUCTED		
NO REVISIONS	REVISED 11-14-83	VOID

FEDERAL ROAD REGION NO.	DIVISION	PROJ. NO.	SHEET NO	TOTAL SHEETS
VIII	COLORADO	FR 014-2(12)	24	32

REVISIONS		

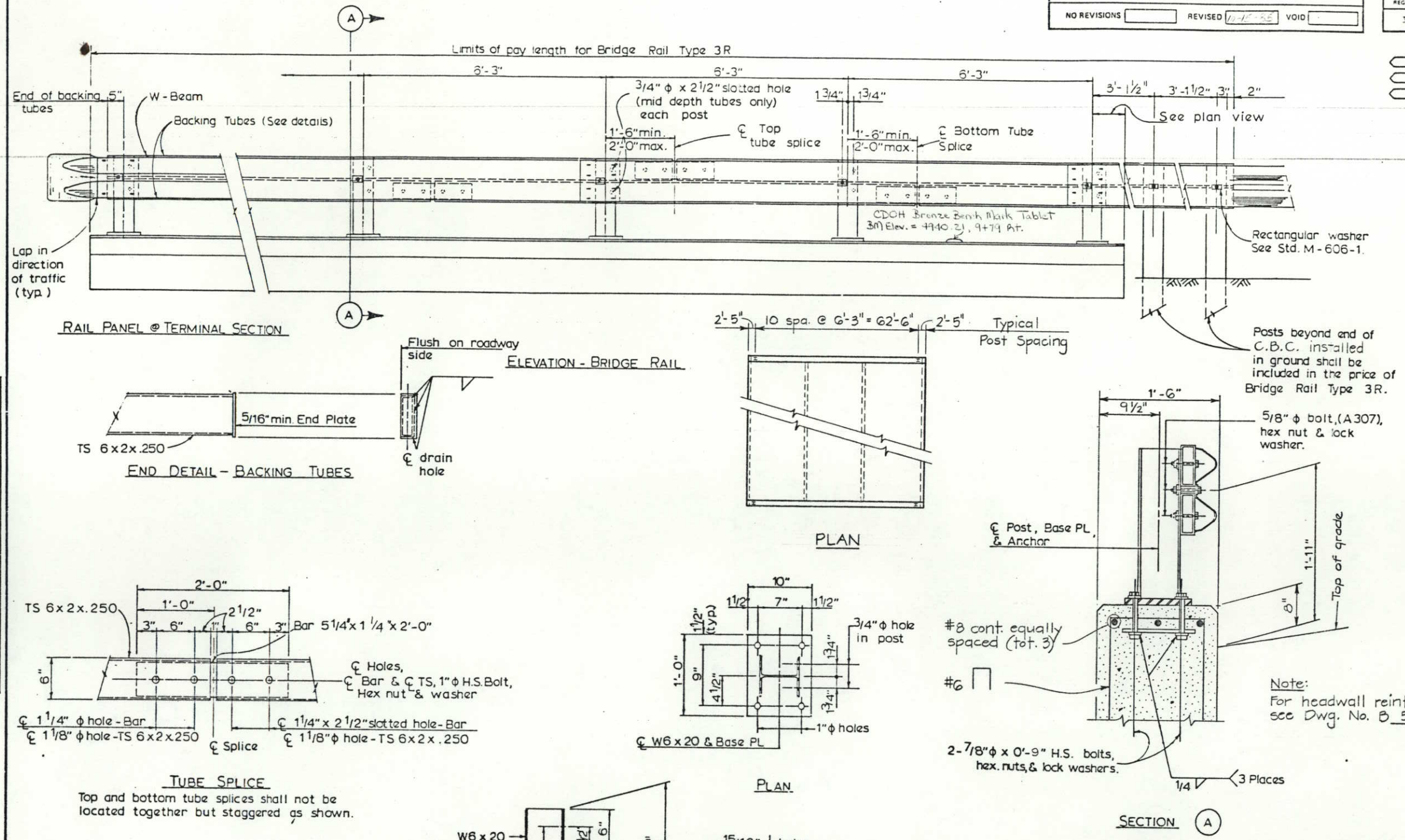

RAIL PANEL @ TERMINAL SECTION

END DETAIL - BACKING TUBES

ELEVATION - BRIDGE RAIL

PLAN

SECTION (A)

Note:
For headwall reinforcing, see Dwg. No. B 5.

TUBE SPLICE

Top and bottom tube splices shall not be located together but staggered as shown.

PLAN

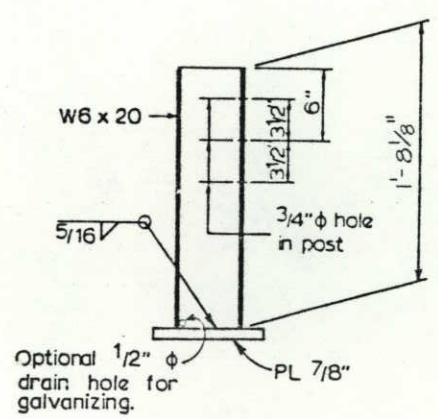

ELEVATION

POST DETAIL

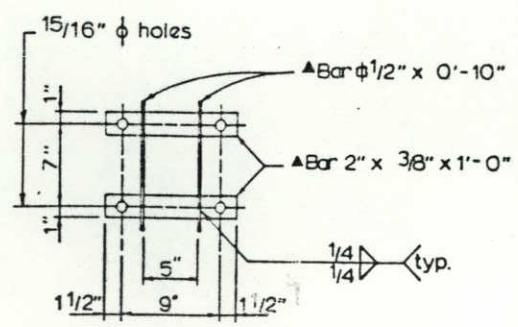

ANCHOR DETAIL

▲A.A.S.H.T.O. M169 Steel may be used in lieu of A.S.T.M. A36 Steel.

NOTES

ALL TUBES SHALL BE FABRICATED FROM ASTM A-500 GRADE B. ALL POSTS SHALL BE FABRICATED FROM ASTM A-36 STEEL. ALL TUBE SPLICES SHALL BE FABRICATED FROM ASTM A572, GRADE 50. THE ABOVE MATERIAL, W-BEAM, AND ALL ANCHOR BOLTS AND MISCELLANEOUS BOLTS, NUTS, AND WASHERS SHALL BE GALVANIZED AFTER FABRICATION IN ACCORDANCE WITH THE SPECIFICATIONS.

POST ANCHOR, ENCASED IN CONCRETE, SHALL BE ASTM A-36 OR AASHTO M-169 STEEL, AS NOTED, AND NEED NOT BE GALVANIZED.

POSTS, POST ANCHORS, BASE PLATES, ANCHOR BOLTS, MISCELLANEOUS BOLTS, NUTS, WASHERS, TUBES, TUBE EXPANSION DEVICES, TUBE SPLICES, END PLATES, W-BEAM, W-BEAM EXPANSION DEVICES, SHALL BE INCLUDED IN ITEM 606 - BRIDGE RAIL TYPE 3R.

THE BACKING TUBES SHALL BE SHOP BENT OR FABRICATED TO FIT HORIZONTAL CURVE WHEN THE RADIUS IS LESS THAN 1500 FEET.

TUBES SHALL BE CONTINUOUS OVER NOT LESS THAN TWO POSTS.

POSTS SHALL BE PERPENDICULAR TO THE GRADE OF ROADWAY.

CONTRACTOR SHALL PROVIDE TERMINAL SECTION (FLARED) WHEN NO APPROACH GUARD RAIL IS USED WITH THE COST INCLUDED IN ITEM 606 - BRIDGE RAIL, TYPE 3. FOR DETAILS SEE STD. M-606-1.

FOR ADDITIONAL DETAILS, SEE STD. M-606-1.

OPTIONAL DRAIN HOLE FOR GALVANZING MAY BE DRILLED, PUNCHED, OR CLIPPED LEAVING SMOOTH SURFACES AND TRANSITIONS. NO FLAME CUTTING OR AIR CARBON ARC GOUGING IS ALLOWED.

THE CONTRACTOR SHALL SUBMIT SHOP DRAWINGS AS SPECIFIED IN THE REVISION OF SECTION 105 OF THE STANDARD SPECIFICATIONS.

STRUCTURAL STEEL:

AASHTO M-183(ASTM A-36)	f_s = 20,000 psi
AASHTO M-223(ASTM A-572)GRADE 50	f_s = 27,000 psi
COLD FORMED ASTM A-500 GRADE B	f_s = 27,600 psi

INFORMATION ONLY

Description	Unit	Per Lin Ft.
Structural Steel (Galvanized)	Lb.	45.4
Bridge Rail Type 3R-W Beam	Lin.Ft.	1.0

INITIAL	DATE	CHECKED BY	DATE	QUANTITIES BY	DATE	CHECKED BY	DATE
WSS	1-83	KMH	1-83				

DESIGNED BY
CHECKED BY
DETAILED BY

DIVISION OF HIGHWAYS

BRIDGE RAIL TYPE 3R

Designer CDOH		Structure Numbers	B-17-DJ
Detailer K. Hines			
Drawing Number B 8	of	8	Drawings

(3-7-83)

Revision Dates 7-8-83 (Preliminary Stage Only)

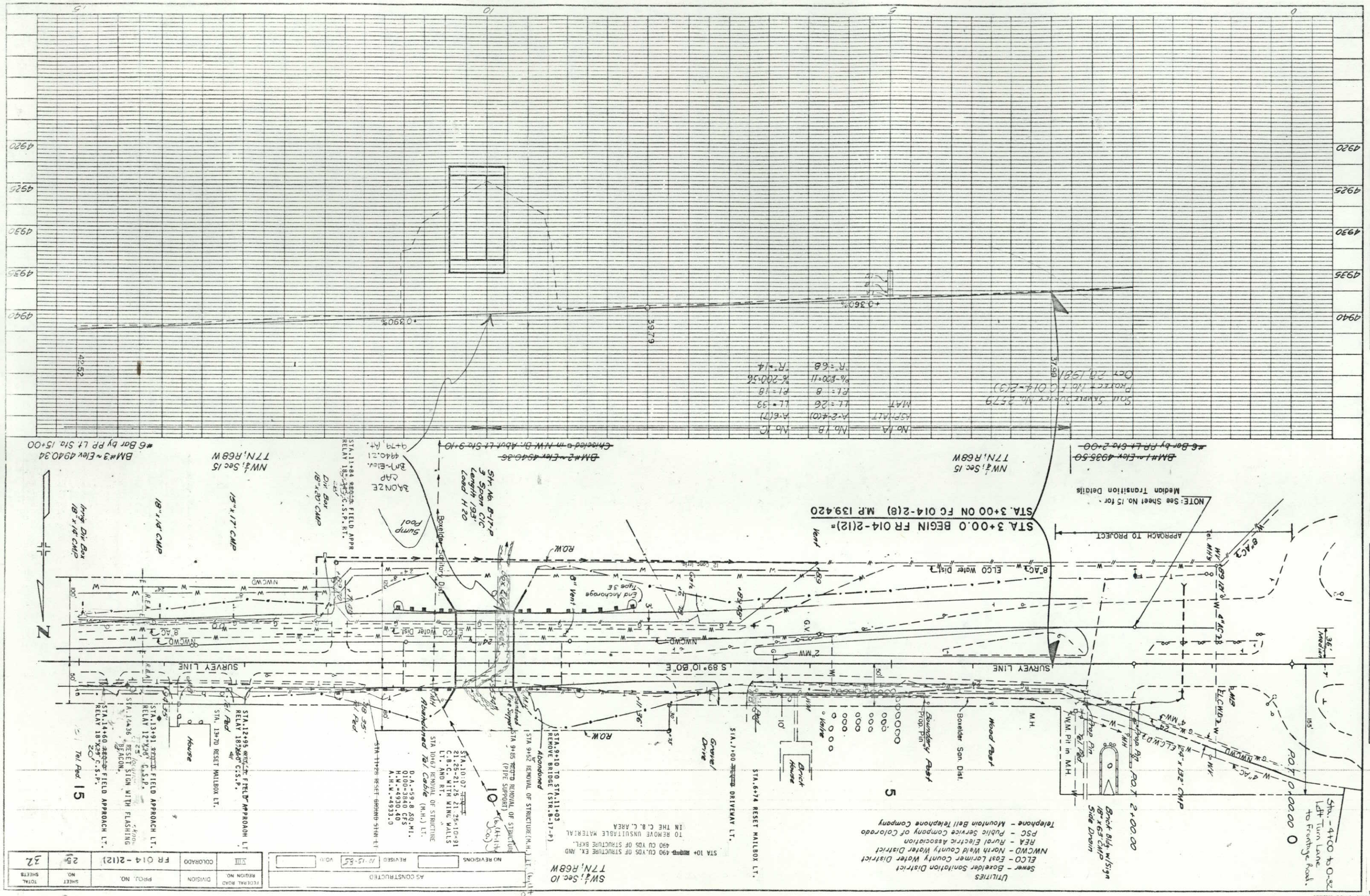
PROFILE
PLAN
STA. 3+00.0 BEGIN FR 014-2(12)=
STA. 3+00.0 ON FC 014-2(8) M.P. 139.420
Median Transition Details
APPROACH TO PROJECT
SURVEY LINE
S 89°10'00"E
Boxelder Sanitary Dist.
ELCO Water Dist.
NWCWD
Boxelder San. Dist.
Wood Post
Boundary Post
Prop. Pin
Brick House
Gravel Drive
Abandoned
Sump Pool
End Anchorage Type 3E
Box Culvert
Irrig. Div. Box 18"x14" CMP
Div. Box 18"x20" CMP
18"x14" CMP
15"x17" CMP
Str. No. B-17-P 3 Span CIC Length 193' Load H 20
BAONZE CAP
STA. 10+67 REMOVAL OF STRUCTURE (M.H.) LT.
STA. 9+85 REMOVAL OF STRUCTURE (PIPE SUPPORT)
STA. 9+52 REMOVAL OF STRUCTURE (M.H.) LT.
STA. 9+10 TO STA. 11+03 REMOVE BRIDGE (STR. B-17-P)
STA. 7+00 DRIVEWAY LT.
STA. 6+74 RESET MAILBOX LT.
STA. 10+07 RESET CB. C.B.C. WITH WING WALLS LT. AND RT.
STA. 11+28 RESET GROUND STAK. LT.
STA. 13+70 RESET MAILBOX LT.
STA. 13+91 FIELD APPROACH LT.
STA. 14+36 RESET SIGN WITH FLASHING BEACON.
STA. 14+60 FIELD APPROACH LT.
STA. 12+95 FIELD APPROACH LT.
STA. 11+84 FIELD APPR. RELAY 18"x25' C.S.P. RT.
STA. 11+00 RELAY 18"x25' C.S.P. LT.
Tel. Pad
House
Brick Bldg. w/Sign 18"x65' CMP Side Drain
Sta. -4+00 to 0-00 Left Turn Lane to Frontage Road.
Utilities
Sewer - Boxelder Sanitation District
ELCO - East Larimer County Water District
NWCWD - North Weld County Water District
REA - Rural Electric Association
PSC - Public Service Company of Colorado
Telephone - Mountain Bell Telephone Company
STA 10+ 490 CU.YDS OF STRUCTURE EX. AND 490 CU YDS OF STRUCTURE BKFL.
TO REMOVE UNSUITABLE MATERIAL IN THE C.B.C. AREA
Soil Sample Survey No. 2579
Project No. FC 014-2(3)
Oct. 20, 1961
No. 1A No. 1B No. 1C
ASPHALT A-2-4(0) A-6(7)
MAT LL=26 LL=33
PI=8 PI=18
%-200=11 %-200=56
R=68 R=14
3979
+0.390%
+0.360%
42.52
3.98
NOTE: See Sheet No. 15 for Median Transition Details
BM#1 ~ Elev. 4935.50 #6 Bar by PR Lt Sta. 2+00
BM#2 ~ Elev. 4946.36 Chiseled in NW Br. Abut. Lt. Sta. 9+10
BM#3 ~ Elev. 4940.34 #6 Bar by PR Lt Sta. 15+00
NW¼, Sec. 15 T7N, R68W
SW¼, Sec. 10 T7N, R68W
AS CONSTRUCTED
NO REVISIONS
REVISED 10-15-65
FEDERAL ROAD REGION NO. VIII
DIVISION
COLORADO
PROJ. NO. FR 014-2(12)
SHEET NO. 25
TOTAL SHEETS 32

DEPARTMENT OF HIGHWAYS
DIVISION OF HIGHWAYS-STATE OF COLORADO
FORM NO. 12
1977

AS CONSTRUCTED			
NO REVISION		REVISED 10-15-85	VOID

FEDERAL AID REGION NO.	DIVISION	SHEET NO.	SHEET NO.	TOTAL SHEETS
VIII	COLORADO	FR 014 - 2(12)	26	32

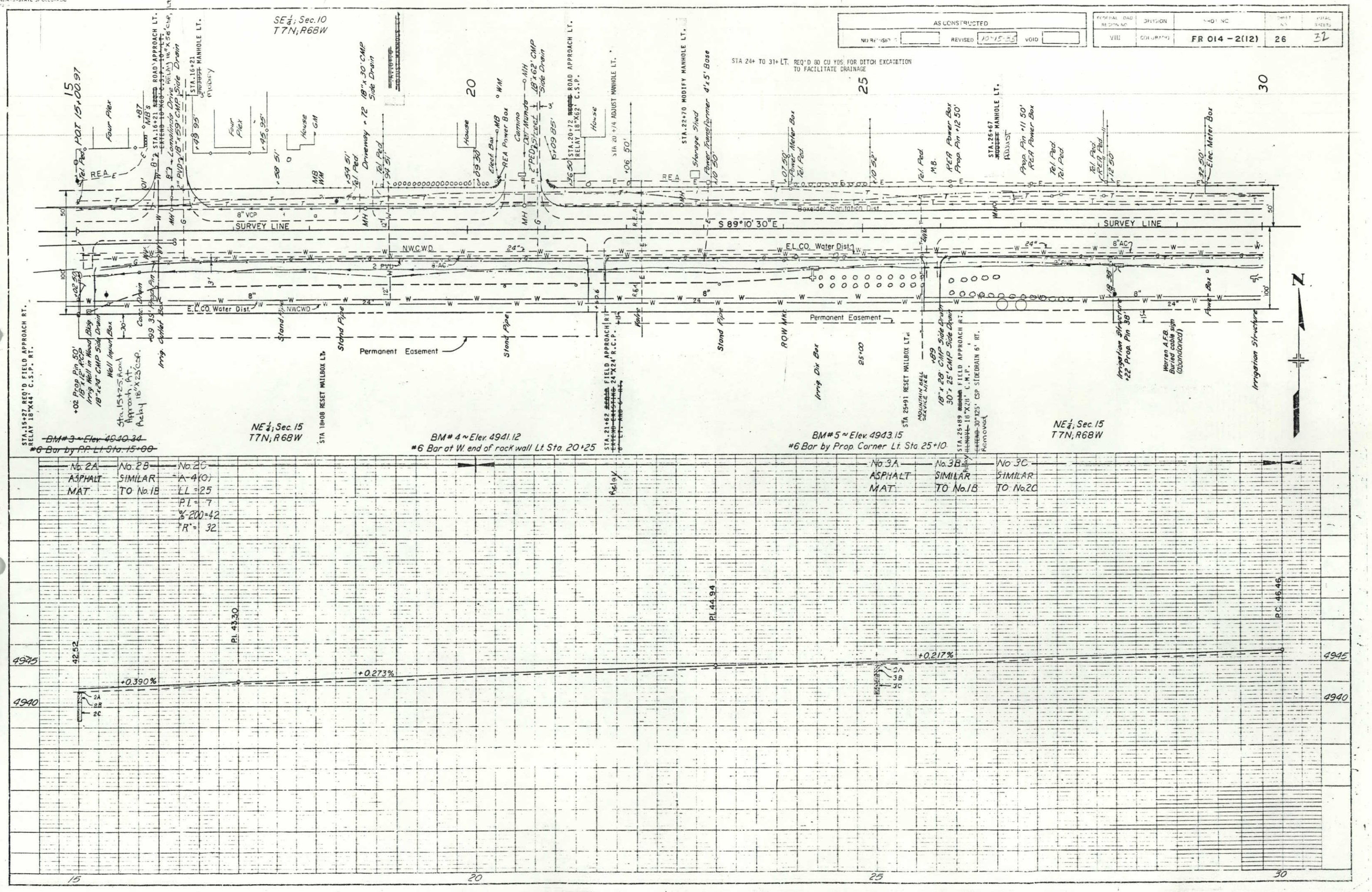

PLOTTED
GRADES CHECKED
R.M. CHECKED
STRUCTURE TOTALS CHECKED
PT. OF WAY CHECKED

NOTE BOOK No. 395/5

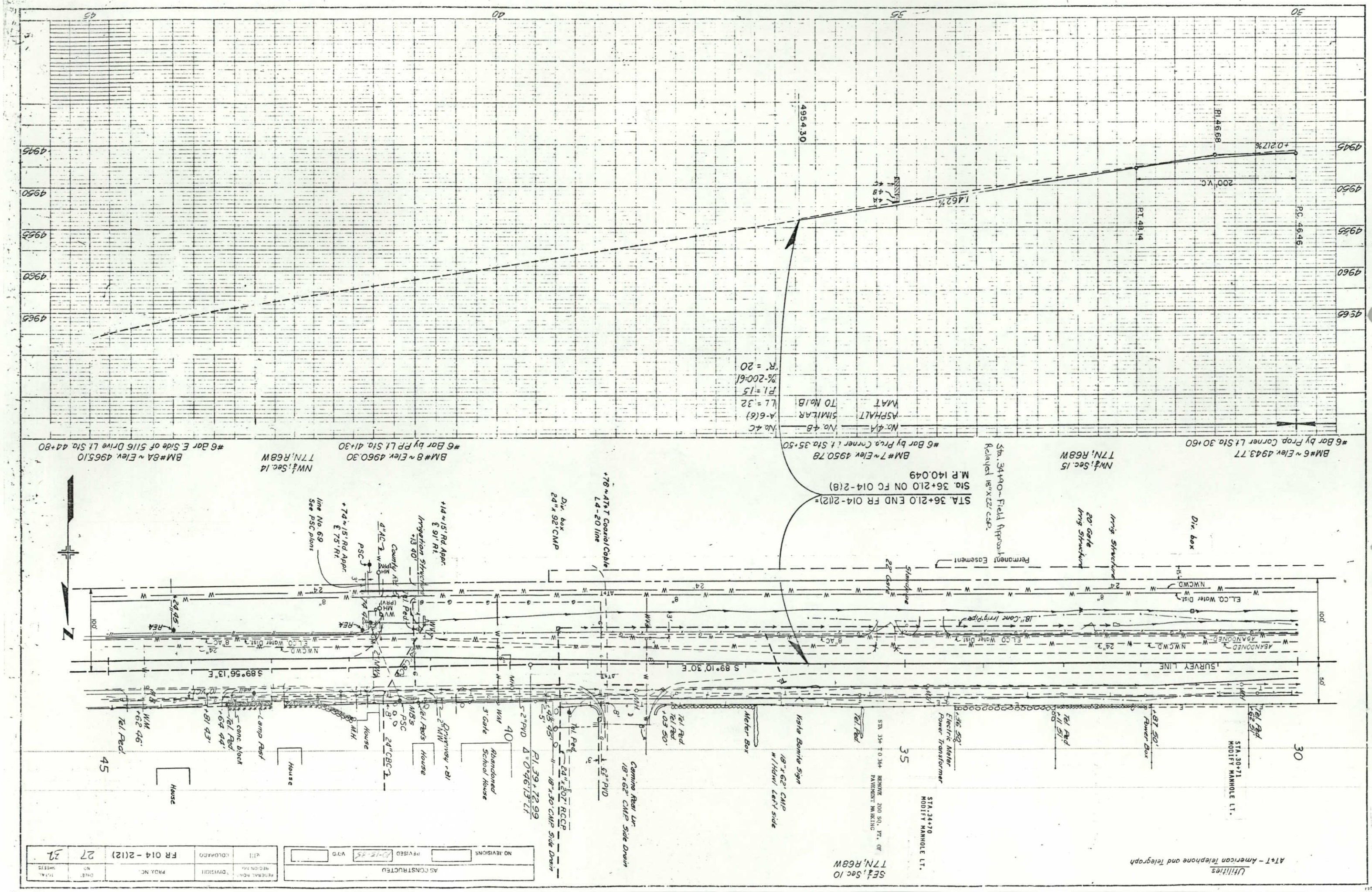
BM#6 ~ Elev. 4943.77
#6 Bar by Prop. Corner L1 Sta. 30+60
NW¼ Sec. 15
T7N, R68W
Sta. 34+90 ~ Field Approach
Relayed 18"x22' C.S.P.
STA. 36+21.0 END FR 014-2(12)=
Sta. 36+21.0 ON FC 014-2(8)
M.P. 140.049
BM#7 ~ Elev. 4950.78
#6 Bar by Prop. Corner L1 Sta. 35+50
No. 4A
No. 4B
No. 4C
ASPHALT MAT
SIMILAR TO No. 1B
A-6(6)
LL = 32
PI = 15
%-200=61
R' = 20
BM#8 ~ Elev. 4960.30
#6 Bar by PP L1 Sta. 41+30
NW¼ Sec. 14
T7N, R68W
BM#8A ~ Elev. 4965.10
#6 Bar E. Side of 5116 Drive L1 Sta. 44+80
SE¼ Sec. 10
T7N, R68W
Utilities
AT&T - American Telephone and Telegraph
AS CONSTRUCTED
NO REVISIONS
REVISED
V.O.D.
REGIONAL ROAD REGION NO.
DIVISION
PROJ. NO.
FR 014-2(12)
COLORADO
CITY
SHEET NO.
27
TOTAL SHEETS
21
P.C. 46.46
P.T. 48.14
P.I. 46.68
200' V.C.
+0.217%
-1.462%
4954.30
4945
4950
4955
4960
4965
100'
50'
30
35
40
45
S 89°10'30" E
S 89°56'13" E
SURVEY LINE
ABANDONED
N.W.C.W.D.
EL. CO. Water Dist.
Permanent Easement
Dir. box
Irrig. Structure
20' Gate Irrig. Structure
22' Gate
Standpipe
18" Conc. Irrig. Pipe
Dir. box 24" x 92' CMP
+76 ~ AT&T Coaxial Cable L4-20 line
+14 ~ 15' Rd. Appr. ℄ 91' Rt.
Irrigation Structure
+74 ~ 15' Rd. Appr. ℄ 75' Rt.
line No. 69 See PSC plans
County Rd.
Rel. Ped.
Rel. Peds
House
Lamp Post
5 conc. block
Tel. Ped.
Tel. Ped. +64 44'
Tel. Ped. +62 46'
WM +62 46'
Abandoned School House
3' Gate
Driveway Rd.
24" CGC
24" PVD
PI. 39+72.99
Δ = 0°46'13" Lt.
24" x 20' RCCP
18" x 30' CMP Side Drain
Camino Real Ln.
18" x 62' CMP Side Drain
Meter Box
Vista Bonita Sign
18" x 62' CMP w/ Hdwl. Left side
STA. 35+ TO 36+ REMOVE 200 SQ. FT. OF PAVEMENT MARKING
Electric Meter
Power Transformer
STA. 34+70 MODIFY MANHOLE LT.
Power Box
STA. 30+71 MODIFY MANHOLE LT.
Tel. Ped. +62 59'
Tel. Ped. +03 50'
Tel. Ped. +11 51'
Tel. Ped. +87 50'
Tel. Ped. +36 50'
Tel. Ped.
Tel. Ped.
Tel. Ped.
MH
WV
MHO
PSC
MB's
REA
N

TABULATION OF PAVEMENT MARKINGS

AS CONSTRUCTED		
NO REVISIONS	REVISED 1-4-82	VOID

FEDERAL ROAD REGION NO.	DIVISION	PROJ. NO.	SHEET NO.	TOTAL SHEETS
VIII	COLORADO	FR 014-2(12)	28	36

STATION	LOCATION	PAVEMENT MARKING LINES (Linear Feet)										
		EDGE		LANE	CENTER		CHANNELIZING		CROSSHATCH		CROSS-WALK	STOP
		WHITE SOLID 4 INCH	YELLOW SOLID 4 INCH	WHITE BROKEN 5 INCH	YELLOW SOLID 5 INCH	YELLOW BROKEN 5 INCH	WHITE SOLID 10 INCH	YELLOW SOLID 10 INCH	WHITE SOLID 10 INCH	YELLOW SOLID 10 INCH	WHITE SOLID 12 INCH	WHITE SOLID 24 INCH
0+00 TO 9+10	SH 14	1820		1820								
2+60 TO 6+70	SH 14		410		820							
6+70 TO 9+10	SH 14				960					180		
9+10 TO 11+40	SH 14	460		460	460	460						
11+40 TO 13+55	SH 14	430		505	430	430						
13+55 TO 16+00	SH 14	245			490	490	245					
16+00 TO 17+00	SH 14	195			50	50	60					
17+00 TO 20+25	SH 14	650		190	650	650	195					
20+25 TO 21+25	SH 14	200					50					
21+25 TO 33+80	SH 14	2510			2510	2510	115					
33+80 TO 35+80	SH 14	400		200	400	400						
35+80 TO 38+20	SH 14	480			440	440	240					
38+20 TO 38+50	SH 14	60										
OPP. STA 16+00	LOMALINDA DR											40
OPP. STA 20+60	CAMINO DEL MUNDO											40
OPP. STA 38+30	CAMINO REAL DR											40
PROJECT TOTALS	(LIN FT)	7430	410	3175	7210	5430	905			180		120
PVMT MKG PAINT	(GALS)	23.5	1.3	3.1	28.6	5.3	7.1			1.4		2.2

		PAVEMENT MARKING LINES (Linear Feet)								
		Edge White 4" Solid			Center Yellow 5" Solid		Broken White 5"		Channelizing White 10" Solid	Stop Bar White 24"
		WB	EB				WB	EB		
Detour 3+ to 34+		3060	3272		7314					
Mainline -4+ to 42+		4315	4080		10,116		550	220	1,954	76 (4 Bars)
	Project Totals =	14,727			17,430		770		1,954	76

		Edge Yellow 4" Solid		Crosshatch Yellow 10" Median		℄ Yellow 5" Broken
Mainline -4+ to 42+		465		323		1,870
	Project Totals =	465		323		1,870

STATION	LOCATION	PAVEMENT MARKING LINES (Linear Feet)										
		EDGE		LANE	CENTER		CHANNELIZING		CROSSHATCH		CROSS-WALK	STOP
		WHITE SOLID 4 INCH	YELLOW SOLID 4 INCH	WHITE BROKEN 5 INCH	YELLOW SOLID 5 INCH	YELLOW BROKEN 5 INCH	WHITE SOLID 10 INCH	YELLOW SOLID 10 INCH	WHITE SOLID 10 INCH	YELLOW SOLID 10 INCH	WHITE SOLID 12 INCH	WHITE SOLID 24 INCH

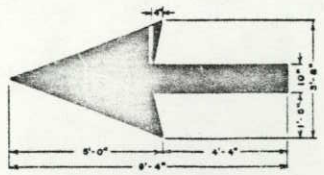

PAVEMENT MARKING ARROW DETAIL

NOTE:
FOR DETAILS OF PAVEMENT MARKING LINES AND LINE PLACEMENT, SEE STANDARD S-627-1

SUMMARY OF PAVEMENT MARKING QUANTITIES			FINAL		
COLOR	PAINT (GAL)	THERMOPLASTIC (SQ. FT)	Detour	ML	FINAL TOTALS
YELLOW	37		31	52	83
WHITE	36		21	49	70
TOTAL	73				153

FLASHING BEACON - SHEET 1

FEDERAL ROAD REGION NO.	DIVISION	PROJ. NO.	SHEET NO.	TOTAL SHEETS
VIII	COLORADO	FR 014 - 2(12)	29	32

AS CONSTRUCTED

NO REVISIONS 10-15-86 REVISED VOID

TYPICAL ELEVATION FACING TRAFFIC

COMPLETE INSTALLATION with DIAMOND PANEL

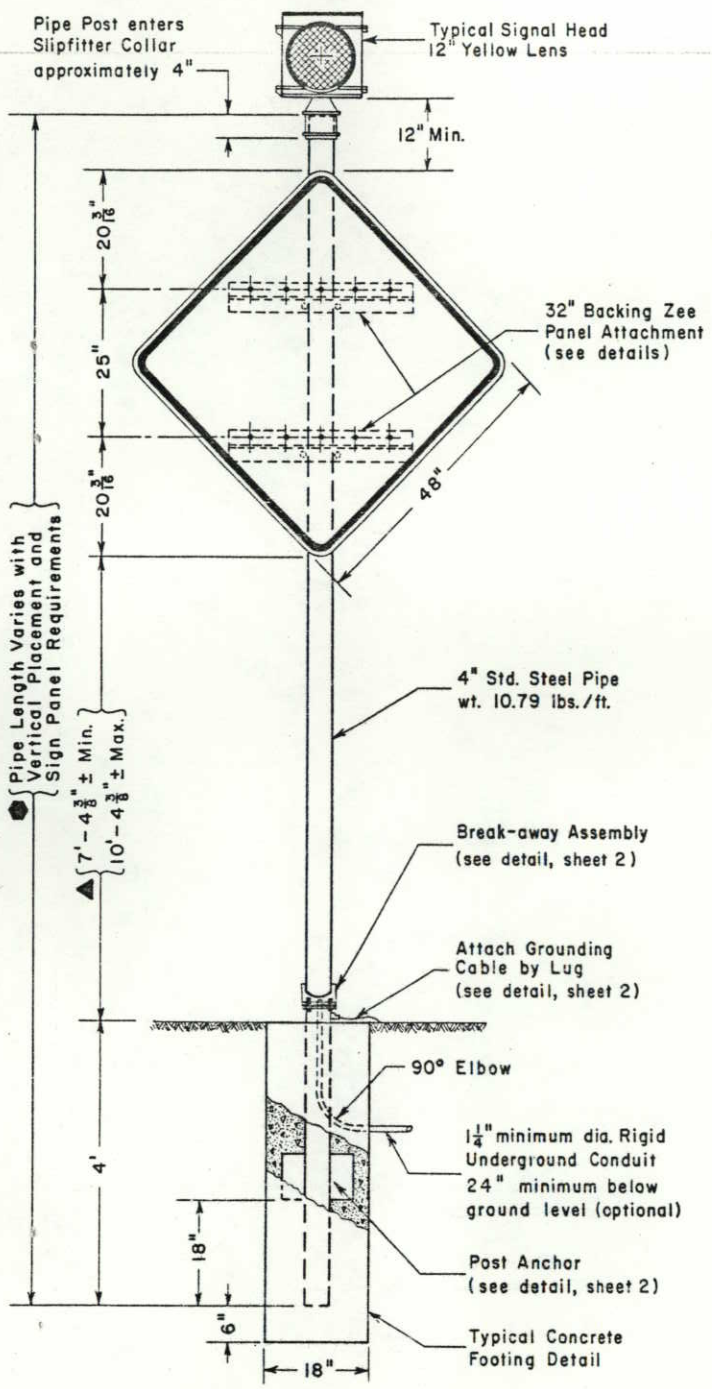

with OCTAGON PANEL

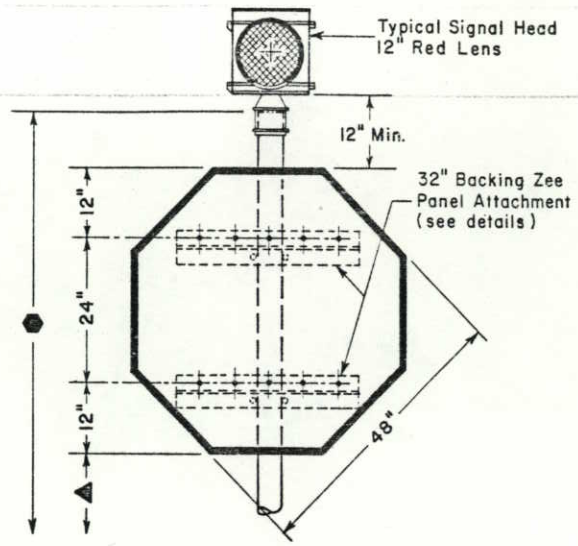

with CIRCLE PANEL

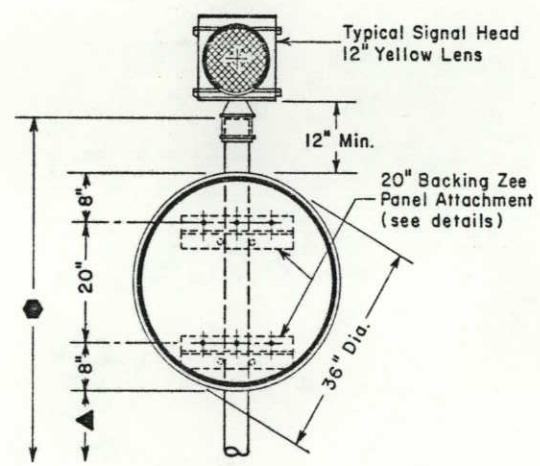

with PENTAGON PANEL

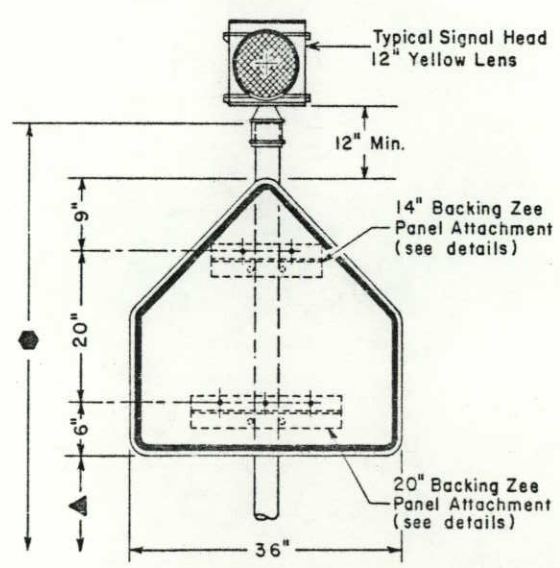

with PANELS NOT ILLUSTRATED

48" CIRCLE (12" Yellow Lens)
Vertical spacing: $10\frac{1}{2}$" – 27" – $10\frac{1}{2}$".
Backing Zees: 20".

48" PENTAGON (12" Yellow Lens)
Vertical spacing top to bottom: 12" – $25\frac{3}{4}$" – 9".
Backing Zees: top 20", bottom 32".

24" x 48" RECTANGLE (12" Yellow Lens) (School Speed Limit)
Vertical spacing: 12" – 24" – 12".
Backing Zees: 20".

TYPICAL SIGNAL HEAD - 12" LENS

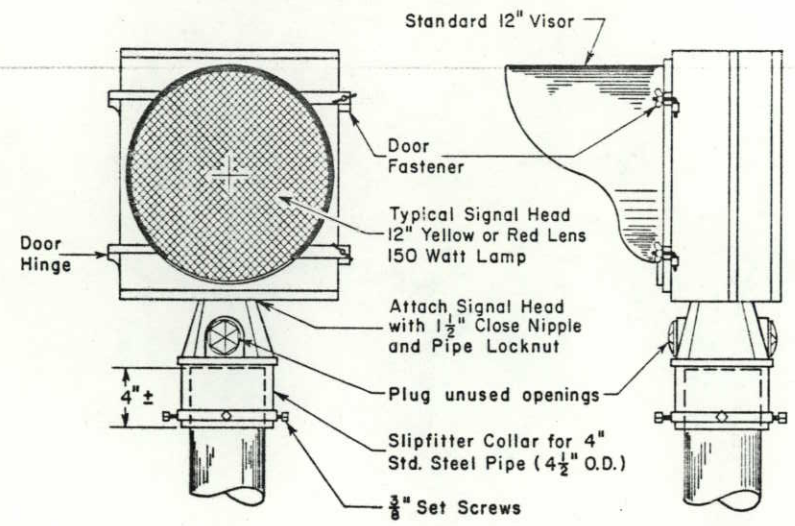

TYPICAL PANEL ATTACHMENT DETAILS

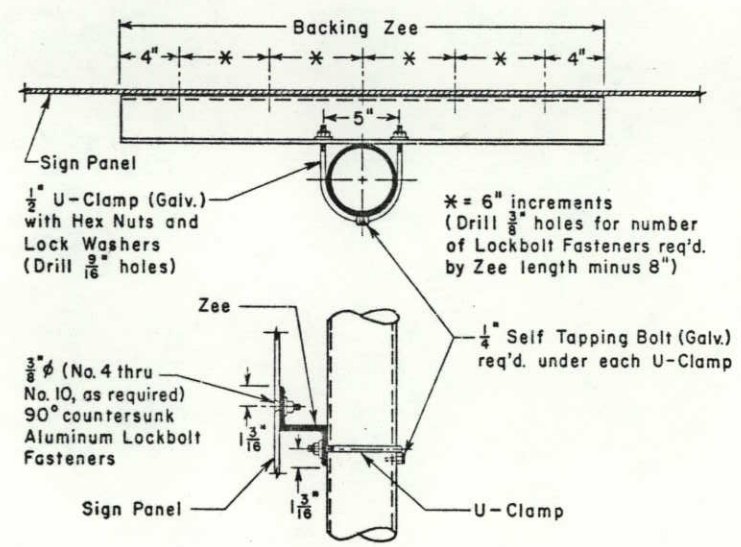

TYPICAL SIGN PLACEMENT

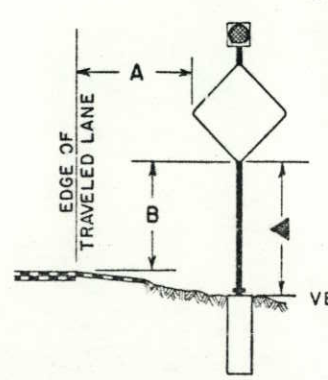

LATERAL PLACEMENT

Normal lateral placement A for Warning Signs is 12 feet plus curb or shoulder width.

Normal lateral placement A for Regulatory Signs is 6 feet plus curb or shoulder width, or if none 12 feet from edge of pavement.

2 feet shall be considered minimum except that in urban areas 1 foot from the curb face is permissible where sidewalk width is limited or where existing poles are close to the curb.

VERTICAL PLACEMENT

Minimum vertical placement B for freeways and expressways shall be 6 feet, and for conventional streets and highways it shall be 7 feet Urban and 5 feet Rural. (12 feet maximum)

GENERAL NOTES

1. All work shall be done in accordance with the "Standard Specifications" applicable to the project and the "Manual on Uniform Traffic Control Devices for Streets and Highways" (adopted by the Federal Highway Administration) and the "Colorado Supplement" thereto.

2. All sign panels used on Flashing Beacons are Class II and shall be fabricated in accordance with:
   a. Panels shall be single sheet, and either 0.0598" minimum thickness steel or 0.100" minimum thickness aluminum.
   b. Backing Zees are 3" x $2\frac{11}{16}$" x $\frac{1}{4}$" and are either 6.7 lbs. per ft. for steel or 2.33 lbs. per ft. for aluminum.
   c. Exposed lockbolt fastener heads on the face of the panel shall be painted or reflectorized to match the surrounding background or legend color.
   d. All panels shall have Smooth Surface Type reflective sheeting.
   e. Bolts, U-clamps, nuts and metal washers shall be galvanized or cadmium plated.
   f. See details in the "Standard Highway Signs" book for background and legend colors and dimensional data for each panel shape and message or symbol required.

3. Installation design conforms with AASHTO "Standard Specifications for Structural Supports for Highway Signs, Luminaires and Traffic Signals" and shall be fabricated in accordance with:
   a. Steel pipe, post anchor plates and break-away plates shall conform to ASTM - A36.
   b. High strength bolts, nuts and washers shall conform to ASTM-A325 and shall be galvanized or cadmium plated.
   c. Holes shall be drilled and cuts shall preferably be saw cuts; however, flame cutting will be permitted provided all edges are ground. Metal shall not project beyond the plane of the plate face on break-away plates.
   d. All welding is to be continuous and in accordance with current AWS specifications.
   e. A "Keeper Plate" of thin (28 gage) galvanized sheet metal, fabricated to match break-away plate dimensions but with holes rather than slots, shall be used to restrain bolt loosening due to wind vibration.
   ⬢ f. Pipe length varies with vertical placement, minimum ground clearance (7'+) and the sign panel required. It will be as shown on the plans, or as determined by cross-section, or as directed by the Engineer for each location (maximum length is approximately 20'-10" and minimum length is approximately 15'-4". If length is not specified supply maximum - may require field cut to conform to Typical Sign Placement details).

4. Concrete Footings for flashing beacon installations shall conform to "Drilled Caissons" and "Structural Concrete" (Class "A", Class "B" or Class "AX" concrete may be used).

GENERAL NOTES CONTINUED ON SHEET 2.

DEPARTMENT OF HIGHWAYS
STATE OF COLORADO
DIVISION OF HIGHWAYS

FLASHING BEACON AND SIGN INSTALLATION

FLASHING BEACON - SHEET 1 OF 3

FLASHING BEACON - SHEET 2

FEDERAL ROAD REGION NO.	DIVISION	PROJ. NO.	SHEET NO.	TOTAL SHEETS
VIII	COLORADO	FR 014-2(12)	30	32

AS CONSTRUCTED

NO REVISIONS 12-15-75 REVISED VOID

TYPICAL BREAK-AWAY ASSEMBLY DETAILS

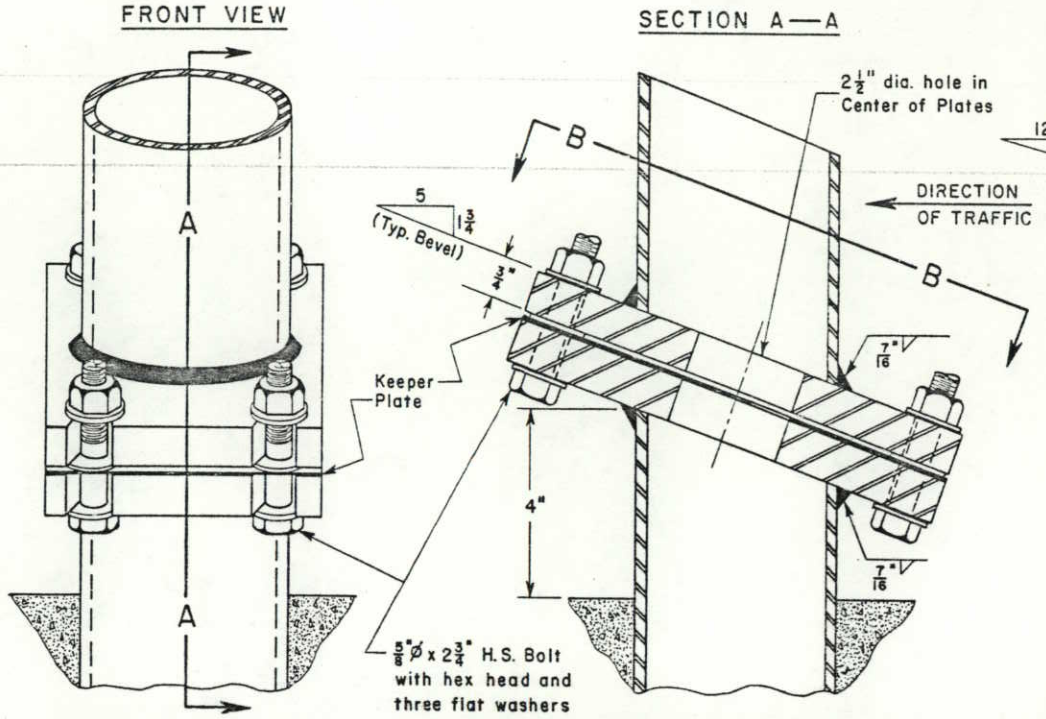

SECTION B—B (PLATE DETAIL)

Shown for installation on right shoulder only – for left side of one-way roadway turn plates over so bevel is opposite direction.

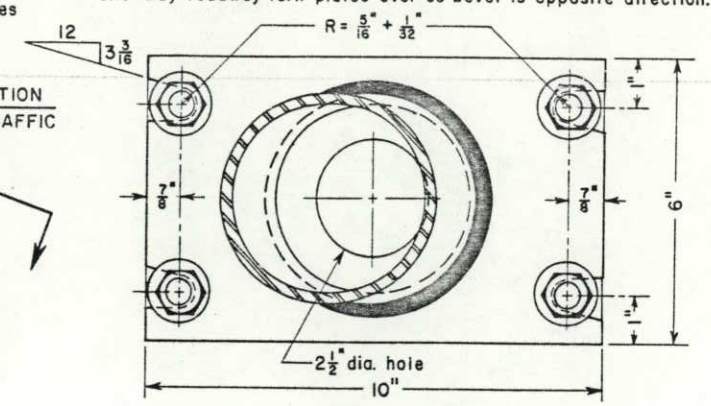

SHIM DETAIL

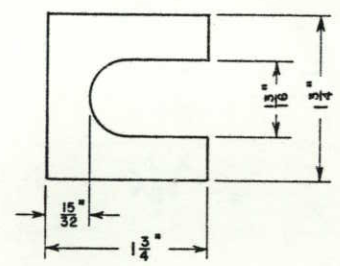

Furnish Two (2) .012"± Thick and Two (2) .032"± Thick Shims.

Shims shall be fabricated from Brass Shim Stock or Strip conforming to ASTM – B 36.

TYPICAL PIPE ATTACHMENTS

POLE CLAMP

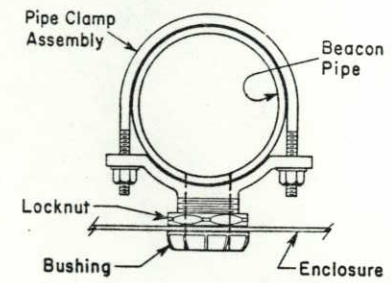

WELDED NIPPLE

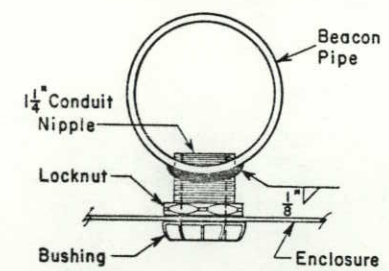

(Note: Weld varies with conduit or nipple wall thickness.)

GENERAL NOTES CONTINUED

5. All electrical materials and workmanship shall conform to the latest requirements of the NEC, NEMA, UL or EIA wherever applicable; the Colorado PUC and any local codes or ordinances which may apply; and the following:
   a. The Contractor is to provide all necessary wiring within the beacon and from there to the power source provided by the Utility Company. The Utility Company will make the connection with the Contractor's wiring.
   b. The electrical service between the power source and the flashing beacon shall be underground unless an aerial drop is authorized by the Engineer.
   c. The "flasher" shall be housed in a suitable enclosure on the utility pole at the power source unless the Engineer directs that the enclosure be mounted on the beacon pipe or that the device may be contained within the signal head itself.
   d. A suitable enclosure for the flasher shall be in accordance with "a raintight junction box or can approximately 8"x8"x4", surface mount, with a flanged screw attached cover, and fabricated from not less than 16 gage galvanized steel".
   e. A built-in radio interference suppression device and a photocell sensor type signal lamp dimmer shall be provided for each flashing beacon.

BREAK-AWAY ASSEMBLY BOLTING PROCEDURE

1. Assemble post to footing with bolts – one flat washer on each bolt top and bottom, and one flat washer and the keeper plate between the break-away plates. Use brass shims to plumb the post.
2. Tighten all bolts to a "snug tight" condition with a 12" to 15" wrench to bed washers and to clean bolt threads, then loosen each bolt in turn and retighten in a systematic order to a "snug tight" plus approximately ⅛ turn.
3. Burr threads at junction with nut using a center punch to prevent nut loosening.

POST ANCHOR DETAILS

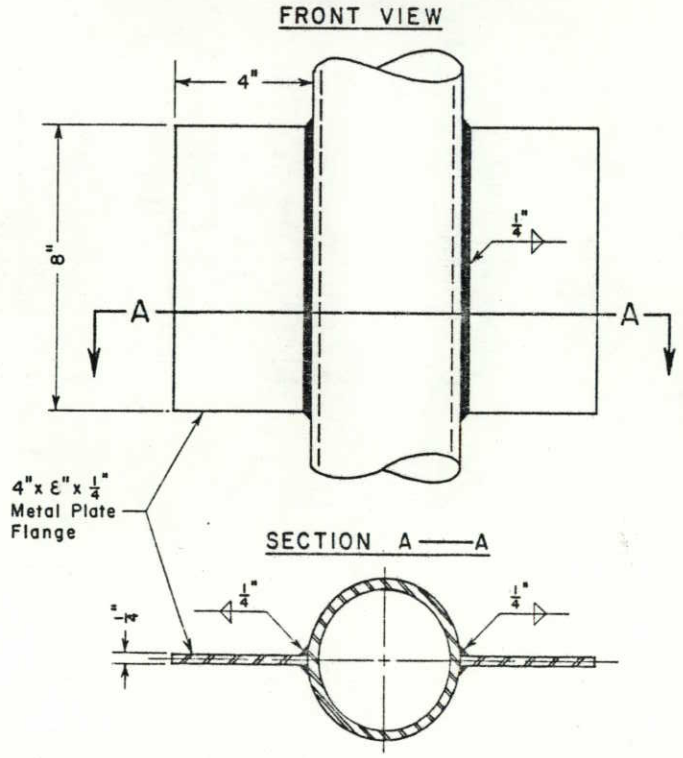

TYPICAL ELECTRICAL SERVICE DETAILS

VIEW AT POWER SOURCE

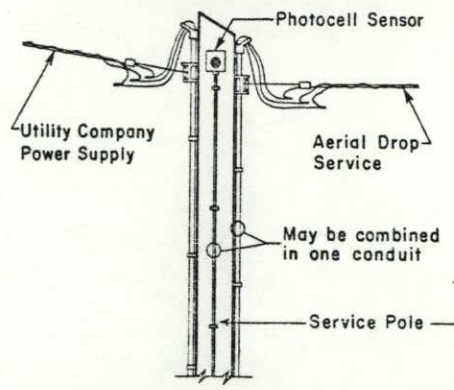

VIEWS AT ENCLOSURES

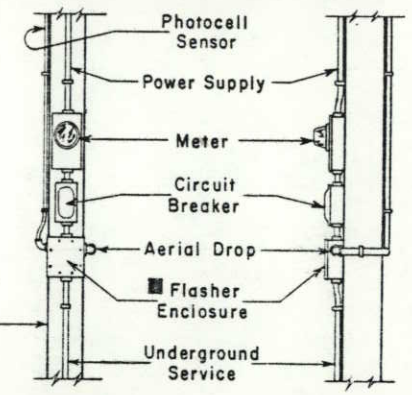

NOTES

Location and configuration of electrical equipment is diagramatic only (use any method complying with the General Notes).

▲ Existing ground at service pole; otherwise pull thru conduit or attach to conduit and tap off underground.

● Drill and tap pipe for ¼" Round Head Brass Screw, ¾" long, for Ground Lug.

■ Provide weep hole with aerial drop service.

VIEWS AT BEACON

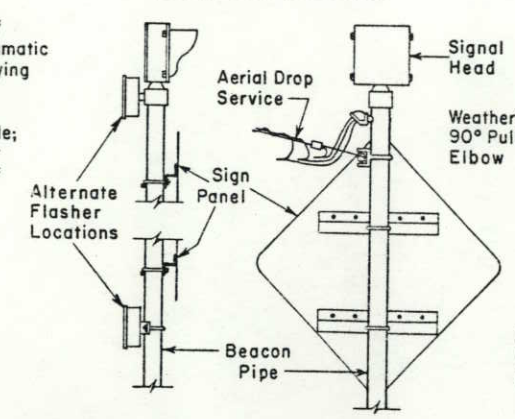

UNDERGROUND CONNECTION

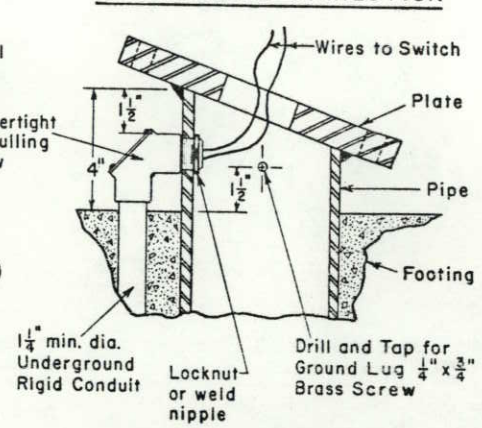

UNDERGROUND VIEWS AT POWER SOURCE

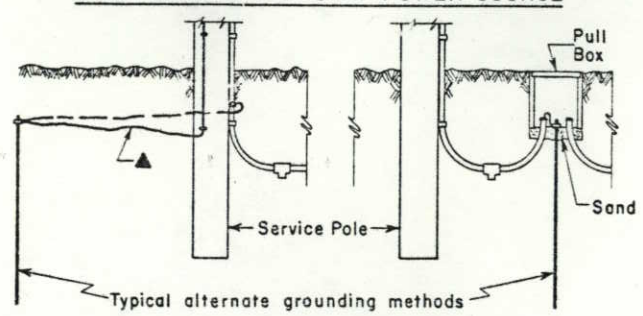

TRENCHING DETAIL

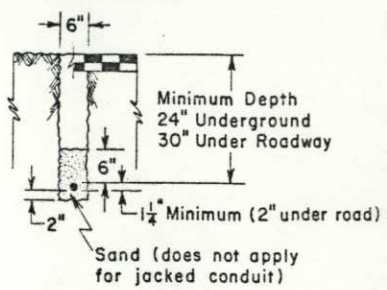

UNDERGROUND VIEWS AT BEACON

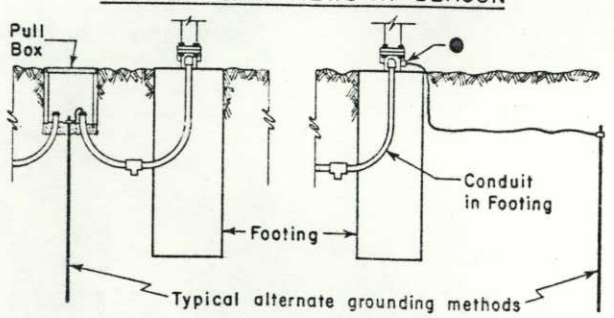

DEPARTMENT OF HIGHWAYS
STATE OF COLORADO
DIVISION OF HIGHWAYS

FLASHING BEACON AND SIGN INSTALLATION

FLASHING BEACON SHEET 2 OF 3

DIVISION OF HIGHWAYS, STATE OF COLORADO
D. O. H. FORM NO. 126
REV. FEB., 1977

FEDERAL ROAD REGION NO.	DIVISION	PROJ. NO.	SHEET NO.	TOTAL SHEETS
VIII	COLORADO	FR 014 - 2(12)	31	32

AS CONSTRUCTED

NO REVISIONS ☐ REVISED 10-15-84 VOID ☐

STRIPING PLAN

Orig. Scale 1" = 50'

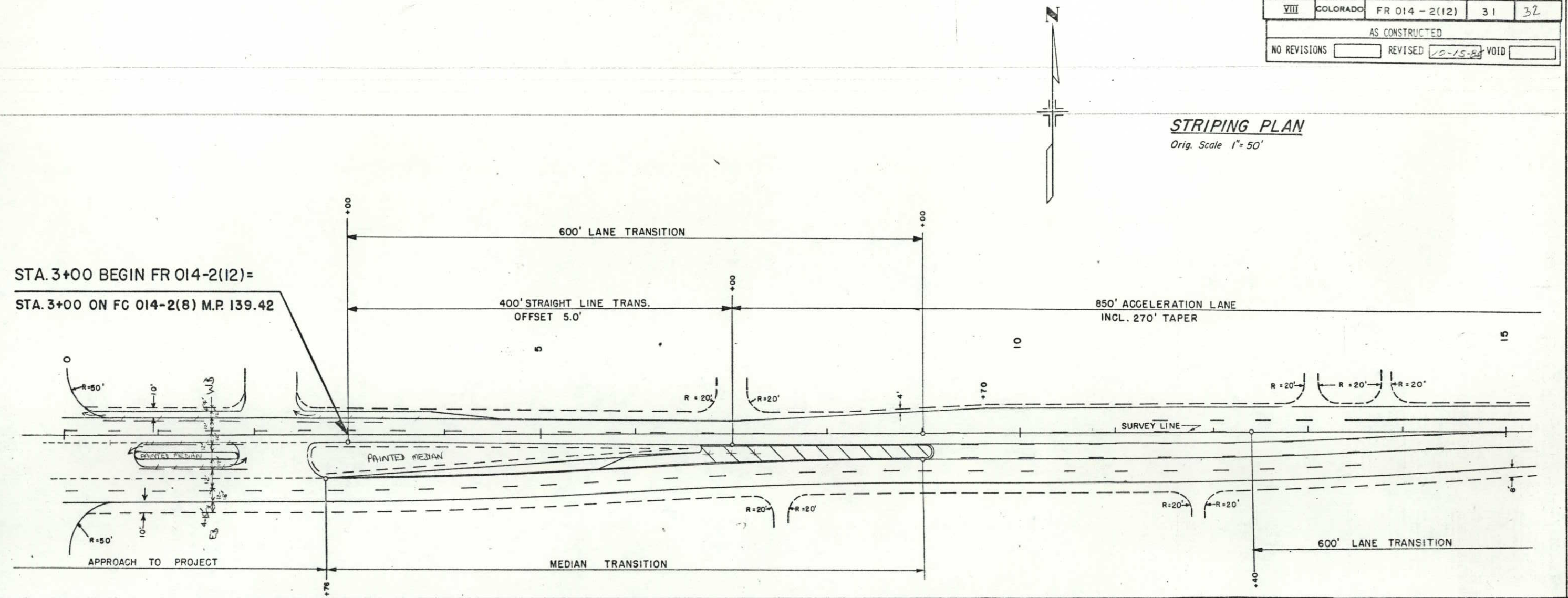

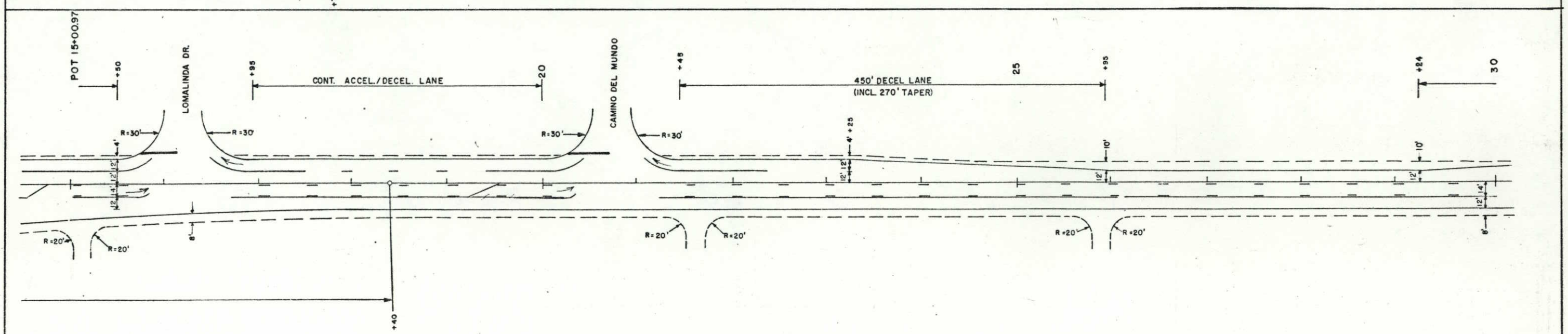

FEDERAL ROAD REGION NO.	DIVISION	PROJ. NO.	SHEET NO.	TOTAL SHEETS
VIII	COLORADO	FR 014-2(12)	32	

AS CONSTRUCTED
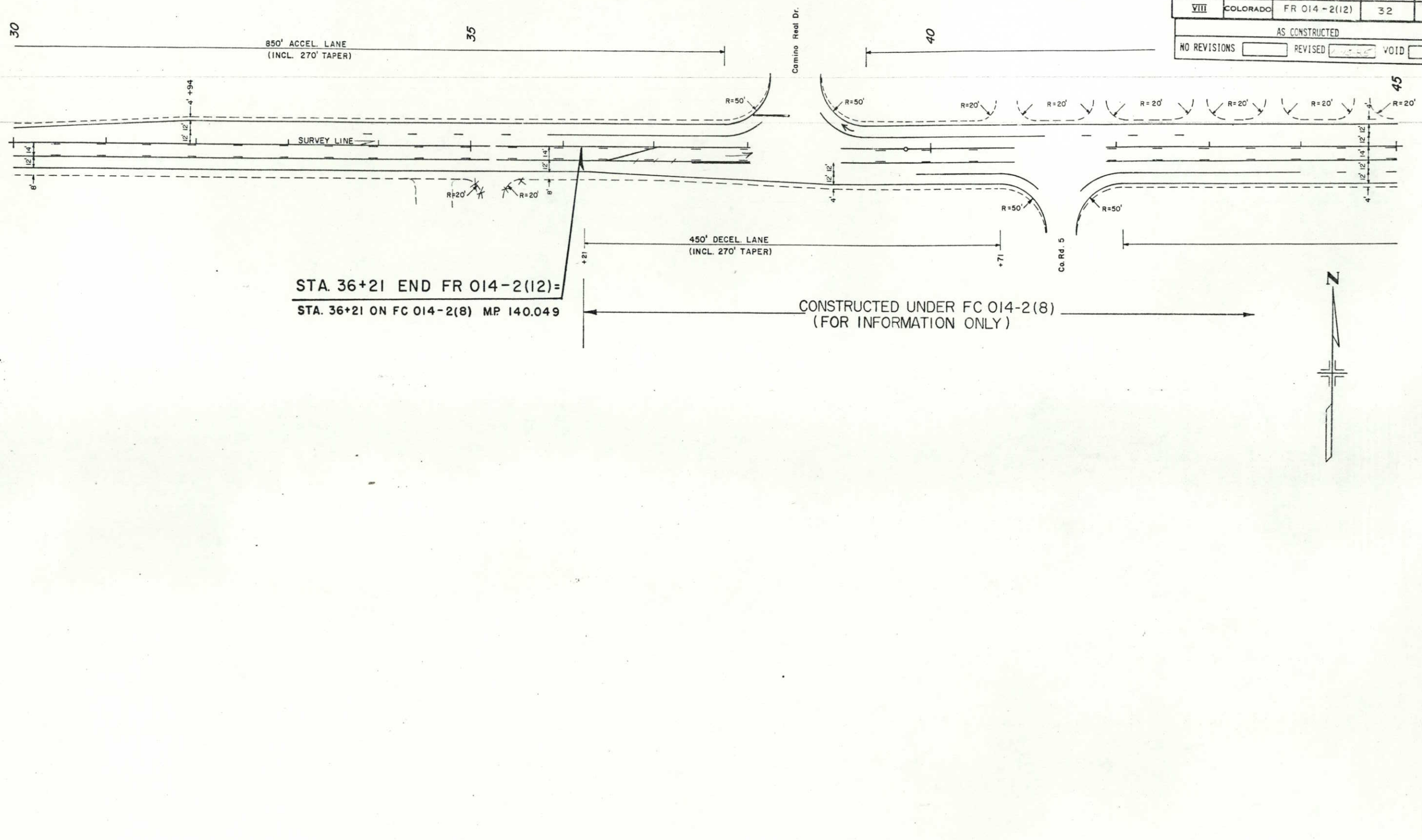
NO REVISIONS ☐ REVISED ☐ VOID ☐