See Standard M-100-A for STANDARD SYMBOLS

ITLE SHEET

STATE DEPARTMENT OF HIGHWAYS
DIVISION OF HIGHWAYS — STATE OF COLORADO

FEDERAL ROAD REGION NO	DIVISION	PROJECT NO	SHEET NO.
VIII	COLORADO	HHS-HHO 0004(2)	1/25

AS CONSTRUCTED			
NO REVISIONS		REVISED 10-4-77	VOID

PLAN AND PROFILE OF ~~PROPOSED~~

FEDERAL AID PROJECT NO. HHS-HHO 0004(2)

STATE HIGHWAY NO. 36 & 7

BOULDER COUNTY

AS CONSTRUCTED PLANS
RETURN TO DIST. 4 DESIGN

SCALES OF ORIGINAL DRAWINGS

ON PLAN, 1 IN. = 50 FT.
ON PROFILE { 1 IN. = 50 FT. HORIZONTAL
1 IN. = 5 FT. VERTICAL

GRADE LINE ON PROFILE IS SHOWN AS GRADE OF FINISHED ROAD

TABULATION OF LENGTH & DESIGN DATA

STATION	△ROADWAY LIN. FT.	
554+67.5 Begin HHS-HHO 0004(2) 554+67.5 on S0087(2) = End S0087(2) 576+29.2 BK = End HHS-HHO 0004(2) 67+12.5 AH 576+29.2 BK on S0087(2)	2161.7	
TOTAL	2161.7	
SUMMARY	LIN. FT.	MILES
ROADWAY (NET & GROSS LENGTH	2161.7	0.409

DESIGN DATA

Maximum Degree of Curve		3°30
Maximum Grade		2.70%
Minimum SSD Horizontal		>600
Minimum SSD Vertical		556
Maximum Design Speed		45 mph
1996 Design Traffic	ADT	10,600
	DHV	2,120

△ Based on "B" Line Stationing

554+67.5 BEGIN HHS-HHO 0004(2)
554+67.5 on S 0087(2)
END S 0087(2)

576+29.2 BK. = END HHS-HHO 0004(2)
67+12.5 AH.

576+29.2 BK. on S 0087(2)

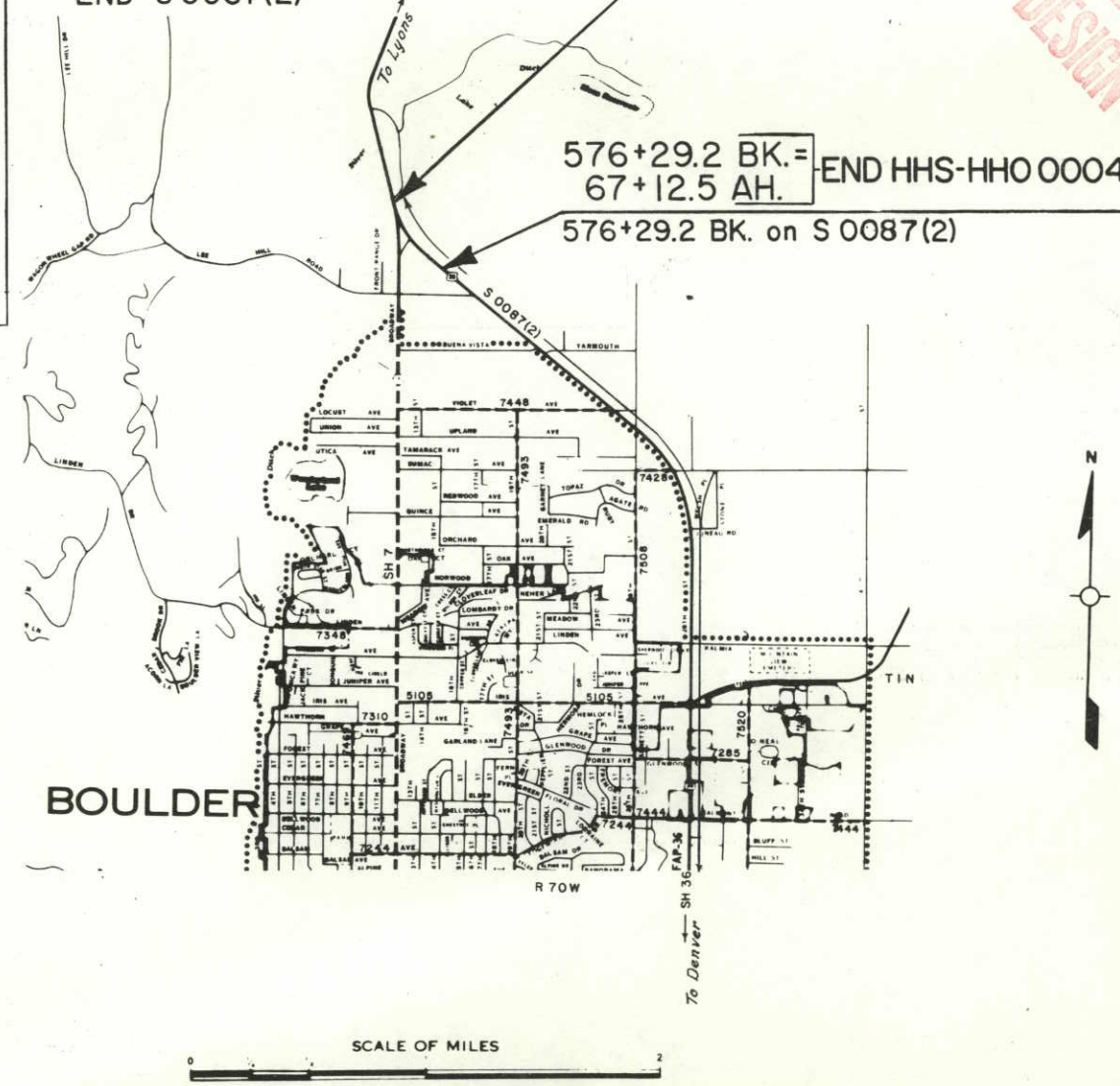

SCALE OF MILES

INDEX OF SHEETS

SHEET NO.		
1	TITLE SHEET, SKETCH MAP AND TABULATION OF LENGTH AND DESIGN DATA	
2	TYPICAL SECTIONS	
3- 5	SUMMARY OF APPROXIMATE QUANTITIES	
6	GENERAL NOTES AND LIGHTING	
7	DELINEATORS, CURB AND GUTTER AND SUMMARY OF EARTHWORK QUANTITIES	
8	STRUCTURE QUANTITIES	
9	SUBBASE AND SURFACING PLAN	
10-14	PLAN AND PROFILE SHEETS	
15-23	SIGNING PLANS	
24-25	Topsoil Cross sections	
	No Revisions Page 12-13-16-18-19-20-21-23.	
	"M" STANDARDS	
M-100-A	STANDARD SYMBOLS	5-11-73
M-203-B	APPROACH ROADS, FLARING, CUT SLOPE TREATMENT, BRIDGE & CREST WIDENING	12-11-72
M-203-C	DITCH TYPES	7-23-68
M-203-SC	SUPERELEVATION OF CURVES - CROWNED HIGHWAYS	3-24-75
M-203-SD	SUPERELEVATION OF CURVES - DIVIDED HIGHWAYS	3-24-75
M-206-AB	EXCAVATION AND BACKFILL FOR STRUCTURES (3 SHEETS)	4-16-76
M-603-CA	CONCRETE AND METAL END SECTIONS	8-21-75
M-603-MA	METAL CULVERT PIPE - H-20 LOADING	8-20-75
M-604-BA	INLET, TYPE C	3-04-76
M-604-D	STEPS FOR MANHOLES AND INLETS	7-23-68
M-609-A	CURBS AND GUTTERS	1-19-76
M-612-A	MARKER POSTS AND BENCH MARKS	6-30-71
M-613-AA	HIGHWAY LIGHTING	4-09-71
M-614-TB	TRAFFIC SIGNING FOR HIGHWAY CONSTRUCTION (3 SHEETS)	11-22-71

INDEX CONTINUED ON SHEET 2

MAR 1978
CONSTR. SEC.
DIST. 4
D.O.H.

DIVISION OF HIGHWAYS

APPROVED: Tom M. Cox 9/1/76
ASST. CHIEF ENGINEER DATE

AS CONSTRUCTED INFORMATION

CONTRACTOR Flatiron Paving Co
Resident ENGINEER J. B. Herrera
(Project or Resident)
PROJECT STARTED Jan. 3, 1977
PROJECT COMPLETED Oct 4, 1977
AS CONSTRUCTED PLANS APPROVED
R.C.E. 12/8/77
TITLE DATE

DEPARTMENT OF TRANSPORTATION
FEDERAL HIGHWAY ADMINISTRATION

APPROVED: DATE

DIVISION ADMINISTRATOR

WCB

FEDERAL ROAD REGION NO.	DIVISION	PROJ. NO.	SHEET NO.	TOTAL SHEETS
VIII	COLORADO	HHS-HHO 0004(2)	2	25

AS CONSTRUCTED

NO REVISIONS ☐ REVISED 10-4-77 VOID ☐

TYPICAL SECTIONS

"B" & "C" LINES

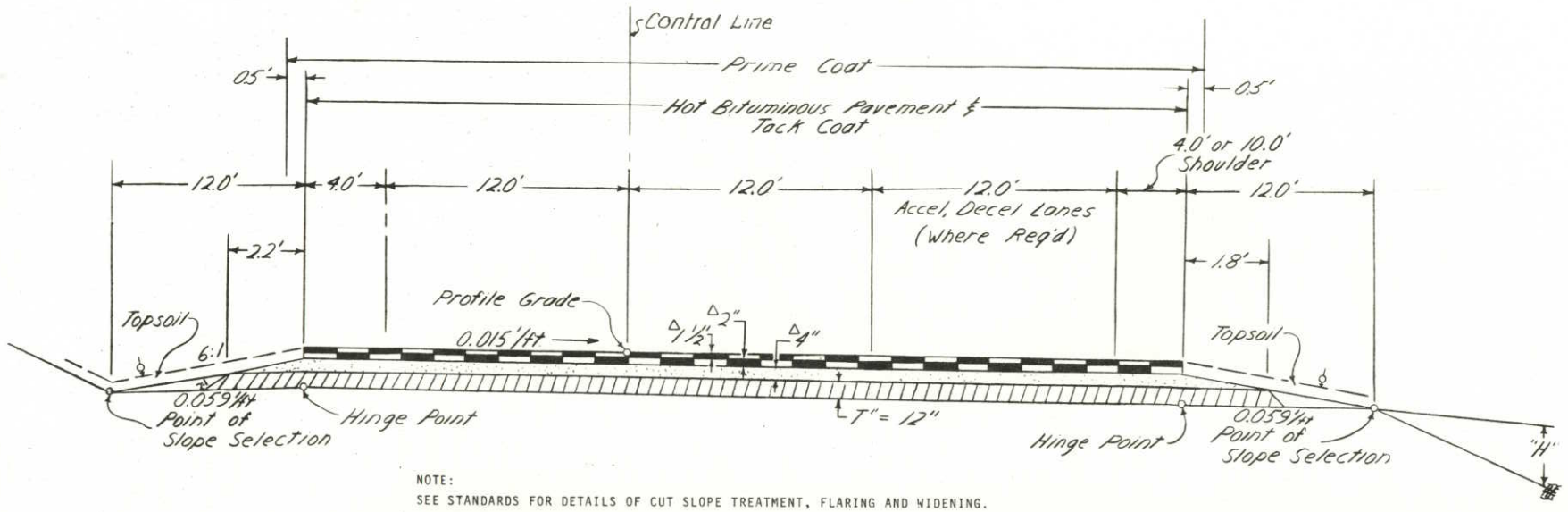

NOTE:

SEE STANDARDS FOR DETAILS OF CUT SLOPE TREATMENT, FLARING AND WIDENING.

EXCAVATION BELOW 6: 1 SLOPE WILL NOT BE PERMITTED.

THE DEPTH AND WIDTH OF THE SIDE DITCH SHALL BE VARIED WHERE NECESSARY IN ORDER TO PROVIDE PROPER DRAINAGE.

BREAK POINTS ON SLOPES AND IN BOTTOMS OF DITCHES SHALL BE ROUNDED ON CONSTRUCTION FOR A PLEASING APPEARANCE.

Δ Approximate Thickness
ϕ Topsoil will be placed to minimum 4 Inches

FILL SLOPES

"H"	Slope
10' or Less	6:1
10' to 25'	4:1
Over 25'	3:1

"E" LINE

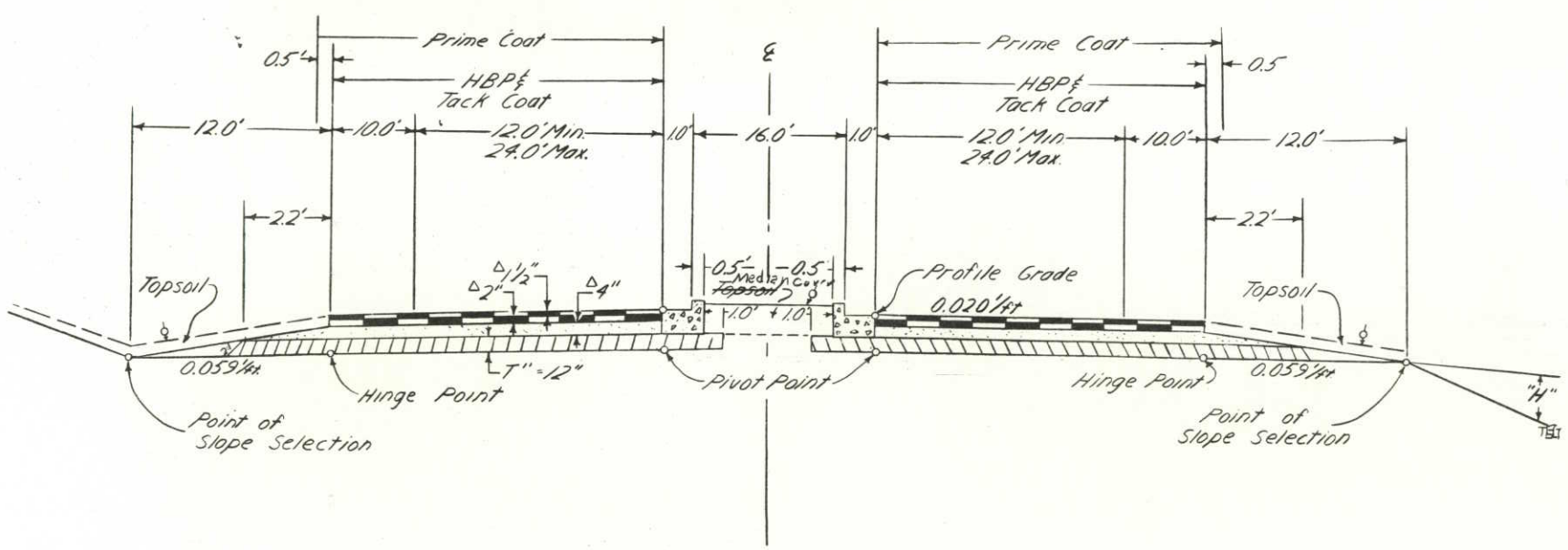

INDEX CONTINUED

"S" STANDARDS

S-612-51A	TYPICAL DELINEATOR INSTALLATIONS	(2 SHEETS)	10-26-72
S-614-18A	TYPICAL POLE MOUNT SIGN INSTALLATION		1-14-71
S-614-19B	TYPICAL GROUND SIGN PLACEMENT		11-17-71
S-614-20B	CLASS I GROUND SIGN INSTALLATIONS		11-2-73
S-614-21B	CLASS II GROUND SIGN INSTALLATIONS		12-2-69
S-614-22C	TYPICAL MARKER ASSEMBLY INSTALLATIONS		6-16-71
S-614-23C	LAMINATED ALUMINUM PANELS AND POST SPACING TABLE FOR CLASS III SIGNS	(2 SHEETS)	10-20-69
S-614-26C	BREAK-AWAY SIGN SUPPORT DETAILS FOR GROUND SIGNS	(2 SHEETS)	5-2-74
S-614-27C	PEDESTALS, FOOTINGS AND SIGN ISLANDS FOR CLASS III SIGNS	(2 SHEETS)	9-24-75
S-614-31C	U. S. AND COLORADO ROUTE MARKERS		11-16-71
S-614-32B	AUXILIARY MARKERS		11-16-71
S-614-35A	TYPICAL MULTI-SIGN INSTALLATIONS		11-17-71
S-614-49A	ALTERNATE SIGN POST MATERIALS		4-12-73
S-614-52A	BARRICADES, DRUMS AND VERTICAL PANEL CHANNELIZING DEVICES		12-4-74

STATE DEPARTMENT OF HIGHWAYS
DIVISION OF HIGHWAYS – STATE OF COLORADO
Form No. 113 (Mylar)
SEPT. 1972

(R-1) 10-8-76 18-Inch C.S.P. W.C.B

SUMMARY OF APPROXIMATE QUANTITIES

AS CONSTRUCTED		
NO REVISIONS	REVISED 10-4-77	VOID

FEDERAL ROAD REGION NO.	DIVISION	PROJ. NO.	SHEET NO.	TOTAL SHEETS
VIII	COLORADO	HHS-HHO 0004(2)	3	25

INDEX BOOK	INDEX PAGE	INDEX SHEET	CONTRACT ITEM NO.	CONTRACT ITEM	UNIT	PROJECT TOTALS	FINAL PROJECT TOTALS	OVER RUN	UNDER RUN
Form	266 &	305	202	Removal of Structure	Each	3	2	—	1
Form	266 &	305	202	Removal of Delineator	Each	26	28	2	—
Form	266 &	305	202	Removal of Curb & Gutter	Lin. Ft.	265	265	—	—
Form	266 &	305	202	Removal of Ground Sign	Each	7	7	—	—
Form	266 &	305	203	Unclassified Excavation (Haul)	Cu. Yd.	20,000	23161	3161	—
Form	266 &	305	203	Compaction (AASHTO T99)	Cu. Yd.	22,000	23347	1347	—
Form	266 &	305	206	Structure Excavation	Cu. Yd.	90	112	22	—
Form	266 &	305	206	Structure Backfill (Class 1)	Cu. Yd.	140	123	—	17
Form	266 & X-Section	305	207	Topsoil (Haul)	Cu. Yd.	4,100	4664	564	—
Form	7 &	305	209	Wetting	M Gal	1,280	714	—	566
Form	7 &	305	209	Water (Landscaping)	M Gal.	130	40	—	90
Form	266 &	305	210	Reset Mailbox Structure	Each	2	2	—	—
Form	266 &	305	210	Reset End Section	Each	9	7	—	2
Form	266 &	305	210	Reset Ground Sign	Each	21	26	5	—
Form	266 &	305	210	Relay Pipe (18 Inch)	Lin. Ft.	146	108	—	38
Form	266 &	305	210	Relay Arch Pipe (24 Inch Equivalent)	Lin. Ft.	106	105	—	1
Form	266 &	305	212	Seeding (Native)	Lb.	125	194	69	—
Form	266 &	305	212	Fertilizer	Lb	2,500	3,875	1375	—
Form	266 &	305	212	Soil Preparation (Native)	Acre	5	7.75	2.75	—
Form	266 &	305	213	Mulching	Ton	10	15.5	5.5	—
Form	305-266 & Scale Tickets		304	Aggregate Base Course (Class 1)(Haul)	Ton	19,600	16,116.65	—	3483.35
Form	266 & Scale Tickets	305	304	Aggregate Base Course (Class 6)(Haul)	Ton	6,600	5,915.75	—	684.25
Form	266 & Scale Tickets	305	403	Hot Bituminous Pavement (Grading EX)(Haul & Asphalt)	Ton	5,800	5,039.15	—	760.85
Form	266 &	305	411	Emulsified Asphalt (CSS-1)	Gal.	1,400	720	—	680
Form	266 &	305	411	Liquid Asphaltic Material (MC-70)	Gal.	12,600	5166	—	7434
Form	266 &	305	507	Concrete Slope & Ditch Paving (Reinforced)	Cu. Yd	2.6	2.18	—	0.42
(R-1) Form	266 &	305	603	18 Inch Corrugated Steel Pipe	Lin. Ft	116	116	—	—
Form	266 &	305	603	24 Inch Corrugated Steel Pipe	Lin. Ft.	62	28	—	34
Form	266 &	305	603	36 Inch Corrugated Steel Pipe	Lin. Ft	32	32	—	—
Form	266 &	305	603	24 Inch Equivalent Corrugated Steel Pipe Arch	Lin. Ft	22	22	—	—
Form	266 &	305	603	36 Inch Equivalent Corrugated Steel Pipe Arch	Lin. Ft.	50	50	—	—

STATE DEPARTMENT OF HIGHWAYS
ION OF HIGHWAYS – STATE OF COLORADO
Form No. 113 (Mylar)
SEPT. 1972

(R-1) 10-8-76 18 Inch Steel End Sect., Meter Pole, W.C.B.

SUMMARY OF APPROXIMATE QUANTITIES

AS CONSTRUCTED		
NO REVISIONS	REVISED 10-4-77	VOID

FEDERAL ROAD REGION NO.	DIVISION	PROJ. NO.	SHEET NO.	TOTAL SHEETS
VIII	COLORADO	HHS-HHO 0004(2)	4	25

INDEX BOOK	INDEX PAGE	INDEX SHEET	CONTRACT ITEM NO.	CONTRACT ITEM	UNIT	PROJECT TOTALS	FINAL PROJECT TOTALS	OVER RUN	UNDER RUN
(R-1) Form	266 &	305	603	18 Inch Steel End Section	Each	12	16	4	–
Form	266 &	305	603	36 Inch Steel End Section	Each	1	1	–	–
Form	266 &	305	604	Inlet Type C (5 Foot)	Each	2	2	–	–
Form	266 &	305	609	Curb & Gutter Type 2 (Section I-B)	Lin. Ft.	810	757	–	53
Form	266 &	305	609	Curb Type 6 (Section M)	Lin. Ft.	270	238	–	32
Form	266 &	305	612	Delineator (Type I)	Each	59	49	–	10
Form	266 &	305	612	Delineator (Type II)	Each	41	35	–	6
Form	266 &	305	613	2 Inch Electrical Conduit	Lin. Ft.	500	510	10	–
Form	266 &	305	613	Direct-Burial Cable	Lin. Ft.	2200	2255	55	–
(R-1) Form	266 &	305	613	Meter Pole	Each	1	1	–	–
Form	266 &	305	613	Wiring	L.S.	0.6	0.6	–	–
Form	266 &	305	613	Luminaire Mercury Vapor (37,000 Lumen)	Each	5	5	–	–
Form	266 &	305	613	Light Standard Aluminum (40 Foot)	Each	5	5	–	–
Form	266 &	305	613	Concrete Foundation Pad	Each	5	5	–	–
Form	266-305	& 7	614	Flagging	Hour	800	874	74	–
Form	266 &	305	614	Sign Panel (Class I)	Sq. Ft.	19	17	–	2
Form	266 &	305	614	Sign Panel (Class II)	Sq. Ft.	190	193	3	–
Form	266 &	305	614	Sign Panel (Class III)	Sq. Ft.	44	44	–	–
Form	266 &	305	614	Timber Sign Post 4x4 Inch	Lin. Ft.	153	153	–	–
Form	266 &	305	614	Timber Sign Post 6x6 Inch	Lin. Ft.	213	213	–	–
Form	266 &	305	614	Concrete Footing (Ty. 4)	Each	2	2	–	–
Form	266 &	305	614	Modification of Timber Sign Post	Each	5	5	–	–

E STATE DEPARTMENT OF HIGHWAYS
VISION OF HIGHWAYS – STATE OF COLORADO
OH Form No. 113 (Mylar)
EV. SEPT. 1972

SUMMARY OF APPROXIMATE QUANTITIES

AS CONSTRUCTED
NO REVISION ☐ REVISED 10-4-77 VOID ☐

FEDERAL ROAD REGION NO.	DIVISION	PROJ. NO.	SHEET NO.	TOTAL SHEETS
VIII	COLORADO	HHS-HHO 0004(2)	5	25

INDEX BOOK	INDEX PAGE	INDEX SHEET	CONTRACT ITEM NO.	CONTRACT ITEM	UNIT		PROJECT TOTALS	FINAL PROJECT TOTALS	OVERRUN	UNDERRUN
ESTimates			626	Mobilization	L. S.		0.5	0.5	–	–
				FORCE ACCOUNT						
			F/A 01	Minor Contract Revisions CMO 4114	L. S.		0.67	$1681.02	–	32848
				NON-FEDERAL AID						
			F/A 02	Striping (Work by State Forces)	L. S.	Work Complete July 18, 1977	0.67	0.67	–	–

(R-1) 10-8-76 General Note and Meter Pole - W.C.B.

FEDERAL ROAD REGION NO.	DIVISION	PROJ. NO.	SHEET NO.	TOTAL SHEETS
VIII	COLORADO	HHS-HHO 0004(2)	6	25

AS CONSTRUCTED
NO REVISIONS ☐ REVISED 10-4-77 VOID ☐

GENERAL NOTES

FOR PRELIMINARY PLAN QUANTITIES OF BITUMINOUS MATERIALS THE FOLLOWING RATES OF APPLICATION WERE USED:

PRIME COAT (MC-70) @ 0.40 GALS. PER SQ. YD.
BITUMINOUS PAVEMENT (GRADING EX) @ 110 LBS. PER SQ. YD./INCH
TACK COAT DILUTED EMUL. ASPH. (CSS-1) @ 0.10 GALS PER SQ. YD.
DILUTED EMULSIFIED ASPHALT FOR TACK COAT SHALL CONSIST OF 1 PART EMULSIFIED ASPHALT AND 1 PART WATER.

RATES OF APPLICATION SHALL BE AS DETERMINED BY THE ENGINEER AT THE TIME OF APPLICATION

WATER SHALL BE USED AS A DUST PALLIATIVE WHERE REQUIRED. LOCATIONS SHALL BE AS ORDERED.

THE FOLLOWING SHALL BE FURNISHED WITH EACH BITUMINOUS PAVER.

1. A SKI TYPE DEVICE AT LEAST 30 FEET IN LENGTH.
2. SHORT SKI OR SHOE.

ANY LAYER OF BITUMINOUS PAVEMENT THAT IS TO HAVE A SUCCEEDING LAYER PLACED THERON SHALL BE COMPLETED FULL WIDTH BEFORE SUCCEEDING LAYER IS PLACED.

ROAD APPROACHES WHICH REQUIRE BITUMINOUS PAVEMENT SHALL BE PRIMED AND A 2" THICKNESS OF PAVEMENT PLACED AS FOLLOWS:

PUBLIC APPROACHES AND ENTRANCES TO BUILDINGS OR RESIDENCES SHALL BE PAVED 50 FT. OUT FROM EDGE OF SHOULDER OR TO THE RIGHT OF WAY LINE WHICHEVER IS LESS. FIELD ENTRANCES SHALL BE PAVED 4 FT. OUT FROM EDGE OF SHOULDER.

IT IS ESTIMATED THAT OLD ROAD IS TO BE OBLITERATED AT THE FOLLOWING LOCATIONS: ALONG D LINE. OBLITERATION SHALL BE SUBSIDIARY TO UNCLASSIFIED EXCAVATION.

DEPTH OF MOISTURE-DENSITY CONTROL FOR THIS PROJECT SHALL BE AS FOLLOWS:

FULL DEPTH OF ALL EMBANKMENTS.

BASES OF CUTS AND FILLS 0.5 FOOT.

EXCAVATION REQUIRED FOR COMPACTION OF BASES OF CUTS AND FILLS WILL BE CONSIDERED AS SUBSIDIARY TO THAT OPERATION AND WILL NOT BE PAID FOR SEPARATELY.

IT IS ESTIMATED THAT 800 HOURS OF FLAGGING FOR CONTROLLING TRAFFIC WILL BE REQUIRED FOR THIS PROJECT.

THE MINIMUM THICKNESS OF TOPSOIL SHALL BE 4 INCHES. IT IS ESTIMATED THAT 4100 CU. YDS. WILL BE REQUIRED, SOURCE FOR TOPSOIL IS UNDESIGNATED.

FLEXIBLE CONDUITS AT STA. 588+ WITH HELICAL CORRUGATIONS, JOINED BY DIMPLED CONNECTING BANDS, SHALL USE A SEALING COMPOUND OR GASKET MEETING FEDERAL SPECIFICATION SS-S-00210 WITH THE CONNECTING BAND.

CLASS "AX" CONCRETE WILL BE PERMITTED ON THIS PROJECT IN LIEU OF CLASS "A".

SEEDING, SOIL PREPARATION, FERTILIZING WITH COMMERCIAL FERTILIZER, AND MULCHING FOR APPROXIMATELY 5 ACRES WILL BE REQUIRED WITHIN RIGHT OF WAY LIMITS ON ALL AREAS NOT SURFACED. THE FOLLOWING TYPES AND RATES SHALL BE USED:

COMMON NAME	BOTANICAL NAME	PERCENT PURITY	PERCENT GERMINATION	RATE PLS/ACRE
BUFFALO GRASS (TREATED)	BUCHLOE DACTYLOIDES	85	80	2
KENTUCKY BLUEGRASS	POA PRATENSIS	85	75	8
CRESTED WHEATGRASS (FAIRWAY STRAIN)	AGROPYRON CRISTATUM	90	85	3
BLUE GRAMA	BOUTELOUA GRACIUS	35	60	6
WHITE DUTCH CLOVER	TRIFOLIUM REPENS	98 1/2	90	3
PROSO MILLET	PANICUM MILIACEUM	98	90	1
TOTAL PLS/ACRE SEEDING (NATIVE)				25

MULCHING MATERIAL	
PRAIRIE HAY	2 TONS PER ACRE

COMMERCIAL FERTILIZER	PERCENT AVAILABLE	LBS/ACRE AVAILABLE	RATE LBS/ACRE
AVAILABLE NITROGEN (18-0-0)	18	50	278
AVAILABLE SUPERPHOSPHATE (0-45-0)	45	100	222
TOTAL LBS/ACRE FERTILIZER			500

SEEDING SHALL BE ACCOMPLISHED BY MEANS OF APPROVED MECHANICAL POWER DRAWN DRILLS.

(R-1) ALL SIGNS, GUARD POSTS, PIPE AND DELINEATORS ARE TO BE SALVAGED. ALL OTHER MATERIAL SHALL BECOME THE PROPERTY OF THE CONTRACTOR.

LIGHTING

STATION	LOCATION LINE	SIDE	LIGHT STANDARD ALUMINUM (40')		CONCRETE FOUNDATION PAD		MERCURY VAPOR LUMINAIRE 37,000 LUMEN (CLEAR)	
560+	C	Rt.	1		1		1	
567+	B	Lt.	1		1		1	
567+	E	Lt.	1		1		1	
570+	E	Lt.	1		1		1	
572+	E	Lt.	1		1		1	
			5		5		5	

It is estimated that ~~500~~ 510 Lin. Ft. of 2 inch Electrical Conduit will be required for this project for Lighting & future signalization. See Plan Sheet and Signing Plans for location.

It is estimated that ~~2200~~ 2255 Lin Ft. of Direct-Burial Cable will be required for Lighting.

(R-1) One Meter Pole is required Rt of Sta. 570+ (D Line)

AS CONSTRUCTED			
NO REVISIONS	REVISED 10-4-77	VOID	

FEDERAL ROAD REGION NO.	DIVISION	PROJ. NO.	SHEET NO.	TOTAL SHEETS
VIII	COLORADO	HHS-HNO 0004(2)	7	25

DELINEATORS

LOCATION	SIDE	SPACING	DELINEATORS TYPE I EACH		DELINEATORS TYPE II EACH		
Lines A & B							
554+ to 561+ (Line A)	Lt.	1°15 Curve	~~7~~	7			
561+ to 576+ (Line B)	Lt.	2° Curve	~~15~~	15			
560+ to 566+ (Lines A & B)	Rt.	Accel. Lane			~~6~~	5	
568+ to 571+ (Lines A & B)	Rt	Decel. Lane			~~5~~	3	
Lines C & D							
564+ to 570+ (Lines C & D)	Rt.	Ramp	~~8~~	4	~~4~~	5	
564+ to 570+ (Line D)	Rt	Ramp	~~3~~	1	~~3~~	3	
560+ to 567+ (Line C)	Lt.	3°30' Curve	~~8~~	6	~~2~~	2	
565+ to 567+ (Line C)	Rt	3°30' Curve	~~3~~	2			
568+ to 570+ (Line C)	Lt.	3°30' Curve	~~3~~	2	~~1~~	1	
569+ to 576+ (Line C)	Rt.	Accel. Lane			~~5~~	6	
Line E							
567+ to 568+	Rt.	12° Curve			~~3~~	3	
567+ to 568+	Lt.	Ramp & Island	~~3~~	1	~~4~~	4	
567+ & 570+	Median				~~2~~	2	
569+ to 574+	Lt.	12° Curve	~~5~~	5			
572+ & 575+	Rt.		~~2~~	2			
Main Line							
67+ to 71+	Lt.	Tang.	~~2~~	4			
67+ to 72+	Rt.	Accel Lane			~~6~~	1	
TOTALS			~~59~~	49	~~41~~	35	

It is Estimated that 26 Removal of Delineators will be required for this Project

CURB & GUTTER

LOCATION		REMOVAL OF CURB & GUTTER LIN.FT.		CURB & GUTTER TYPE 2 (SECTION I-B) LIN.FT.		CURB TYPE 6 (SECTION M) LIN.FT.	
566+86 to 567+94 (Line B)	Rt	~~265~~	265			~~125~~	105
568+ (Line C)	Rt					~~145~~	133
567+20 to 570+95 (Line E)	Median			~~810~~	757		
TOTALS		~~265~~	265	~~810~~	757	~~270~~	238

SUMMARY OF EARTHWORK QUANTITIES

INDEX Book	Page	Sheet		TOTAL	
			UNCLASSIFIED EXCAVATION (HAUL)		
Computer Print out			Roadway (From Cross Section)	17,968	20017
			Flatten Slopes	525	
			Emb. for Islands	100	
			Structure Quantities as Emb.	450	
			Structure Quantities as Excav.	30	
			Structure Quantities as Ditch	25	87
Form 266			Est. for Cut Slope Treatment	500	
Form 266 & 305			Roadway (Not in Cross Sections)		3057
			TOTAL FOR PAY QUANTITY	19,598 Cu.Yd.	23,161 Cu.Yd.
			COMPACTION (AASHTO T99)		
			(Moisture and Density Control)		
Computer Print out			Embankment (Net)	13,698	12,438
Form 266 & 305			Base of Cuts and Fills	7,852	7,852
			~~Structure Quantities as Emb (Net)~~	~~450~~	
Form 266 & 305			Roadway (Not in Cross Sections)		3,057
			TOTAL FOR PAY QUANTITY	22,000 Cu.Yd.	23,347 Cu.Yd.
			ROADWAY QUANTITIES BALANCE (For Information Only)		
			EXCAVATION		
			UNCLASSIFIED		
			Roadway	17,968	23,161
			Flatten Slopes-Material from State Project, City of Boulder (No Pay for Excavation)	525	1 125
			Alternal Haulad to Jay Road, HHS 0004(2)		- 5870
			TOTAL	18,493	18,416
			EMBANKMENT NET (Roadway from Cross Section)		
			TOTAL	13,698 Cu.Yd.	15,495 Cu.Yd.
			EMBANKMENT x ~~1.35~~ 1.1885 (Roadway)		
			TOTAL	18,493 Cu.Yd.	18,416 Cu.Yd.
			WETTING		
			Compaction	880	373
			Subbase	294	206
			Surfacing	98	135
			TOTAL FOR PAY QUANTITY	1,272 MGal	714 MGal.
			WATER (LANDSCAPING)		
			Seeding and Mulching	125	40
			TOTAL FOR PAY QUANTITY	125 MGal.	40 MGal.

THE STATE DEPARTMENT OF HIGHWAYS
DIVISION OF HIGHWAYS–STATE OF COLORADO
DOH FORM NO. 125 (MYLAR)
REV. MARCH, 1975

(P.I) 10-8-76 Add End Sections, W.C.B

STRUCTURE QUANTITIES

AS CONSTRUCTED			
NO REVISIONS		REVISED 10-4-77	VOID

FEDERAL ROAD REGION NO.	DIVISION	PROJECT NO.	SHEET NO.
9	COLORADO	HHS-HHO 0004(2)	8/25

INDEX BOOK	INDEX PAGE	INDEX SHEET	LOCATION	UNCLASSIFIED EXCAVATION CUBIC YARD EXCAV.	UNCLASSIFIED EXCAVATION CUBIC YARD EMB.	UNCLASSIFIED EXCAVATION CUBIC YARD △ DITCH	STRUCTURE EXCAVATION CUBIC YARD		STRUCTURE BACKFILL CUBIC YARD CL. I	STRUCTURE BACKFILL CUBIC YARD	REMOVAL OF STRUCTURE EACH	AGGREGATE BASE COURSE SURFACING (CLASS 6) TON	HOT BITUMINOUS PAVEMENT (GRADING EX) TON	INLET TYPE C 5 FT. EACH	INLET TYPE C 5 FT. "H"	CONCRETE CUBIC YARD CL. A		REINFORCING STEEL LB.	RELAY PIPE LIN. FT. 18"	CORRUGATED STEEL PIPE LIN. FT. 18"		CORRUGATED STEEL PIPE LIN. FT. 24"		CORRUGATED STEEL PIPE LIN. FT. 36"					"H" OVER CULV. FT.	CONCRETE SLOPE AND DITCH PAVING (REINF.) CUBIC YARD	END SECTION EACH 18"	END SECTION EACH 36"			MISCELLANEOUS
Form	266-	305	553+00 to 554+675	*	*							⊖	⊖																						
Form	266-	305	558+51 (C Line)		*~~10~~	59 ~~5~~	~~8~~	12	~~15~~	19														18 ~~14~~					1			1			1-Reset End Section
(P.I) Form	266-	305	560+32 (A Line)		*~~120~~		~~6~~	6	~~14~~	14	1	⊖ ~~55~~	⊖ ~~28~~							70									1		2				
Form	266-	305	564+00 (B Line)	*~~10~~			~~5~~		~~10~~			⊖ ~~21~~	⊖ ~~11~~										~~34~~						1						~~2-Reset End Section~~
Form	266-	305	564+25 (B Line)		*~~50~~		~~4~~	4	~~7~~	5				1	5'-0"								18 ~~14~~ 10 ~~8~~						5	1.28 ~~1.3~~					1-Reset End Section
Form	266-	305	569+90 (D Line)		*~~10~~							⊖ ~~11~~	⊖ ~~7~~																		2				
Form	266-	305	565+50 (D Line) ~~566+10 (E Line)~~	*~~10~~			~~12~~	41	~~19~~	18																			2						3 ~~6~~ Lin. Ft. - 24 Inch Equivalent Corrugated Steel Pipe Arch 61 Lin Ft - Relay Arch Pipe (24 Inch Equivalent) 2-Reset End Section
Form	266-	305	566+10 (B Line)		*~~10~~							⊖ ~~11~~	⊖ ~~2~~																						
Form	266-	305	567+	*	*							⊖	⊖																						
Form	266-	305	570+00 (B Line)	*~~10~~		28 ~~30~~	~~17~~	17	~~19~~	19	1			1	2'-6"														2	0.90 ~~1.3~~					19 ~~15~~ Lin Ft - 24 Inch Equivalent Corrugated Steel Pipe Arch 44 ~~45~~ Lin Ft - Relay Arch Pipe (24 Inch Equivalent) 1-Reset End Section
(P.I) Form	266-	305	571+34 (E Line)		*~~30~~		~~4~~	4	~~8~~	7	~~1~~	⊖ ~~18~~	⊖ ~~10~~						40	38									1		2				
Form	266-	305	571+47 (E Line)		*~~50~~			5		7		⊖ ~~67~~	⊖ ~~34~~																		2				
Form	266-	305	572+ (E Line)					7		7									38												2				
(P.I) Form	266-	305	573+70 (E Line)		*~~30~~		~~4~~	1	~~9~~	2		⊖ ~~11~~	⊖ ~~6~~						~~36~~	8									1		2				
Form	266-	305	572+44 (B Line)		*~~70~~							⊖ ~~11~~	⊖ ~~2~~																						
(P.I) Form	266-	305	572+75 (C Line)		*~~40~~		~~3~~	3	~~6~~	6		⊖ ~~11~~	⊖ ~~2~~						30										1		2				
Form	266-	305	573+33 (B Line)		*~~10~~		~~11~~	11	~~18~~	18																			2						20 ~~30~~ Lin Ft - 36 Inch Equivalent Corrugated Steel Pipe Arch 2-Reset End Section
Form	266-	305	575+85 (B Line)		*~~20~~							⊖ ~~55~~	⊖ ~~28~~																						
(P.I) Form	266-	305	575+20 (C Line)		*~~30~~		~~3~~		~~7~~			⊖ ~~55~~	⊖ ~~28~~						~~36~~										1		~~2~~				
Form	266-	305	67+125 to 70+00		*	*						⊖	⊖																						
(P.I) Form	266-	305	67+55		*~~30~~		~~4~~	1	~~8~~	1		⊖ ~~55~~	⊖ ~~28~~						~~44~~ Left in Place										1		2				
Form	266-	305	Entire Project																																2-Reset Mailbox Structures
(P.I)			TOTALS	‡*~~30~~	‡*~~450~~	+87 ~~25~~	~~81~~	112	~~140~~	123	~~3~~ 2	●~~381~~	●~~181~~	2					~~146~~ 108	116		~~62~~ 28		32						~~2.6~~ 2.18	~~12~~ 16	1			

* Included in Earthwork Quantities
⊖ Included in Surfacing Plan
‡ Carried to Earthwork Summary
△ W = 10' or Less
● Carried to Surfacing Plan

FEDERAL ROAD REGION NO.	DIVISION	PROJ. NO.	SHEET NO.	TOTAL SHEETS
VIII	COLORADO	HH5-HH0 0004(2)	9	25

AS CONSTRUCTED

NO REVISIONS ☐ REVISED 10-4-77 VOID ☐

SUBBASE & SURFACING PLAN

STATION	SOURCE	QUANTITY-TONS								
		SUBBASE		BASE COURSE		SURFACE COURSE-HOT BITUMINOUS PAVEMENT				
		ABC CLASS 1		ABC CLASS 6		BOTTOM LAYER GRADING EX			TOP LAYER GRADING EX	
554+67.5 (A&C) to 556+00 (A&C)		~~443~~	0	~~136~~	0	~~72~~	0		~~54~~	50
556+00 (A&C) to 560+00 (A)		~~828~~	502	~~258~~	72	~~137~~	26		~~103~~	81
556+00 (A&C) to 561+60 (C)		~~1141~~	495	~~358~~	236	~~187~~	131		~~141~~	150
560+00 (A) to 561+87.5 (A&B)		~~563~~	566	~~176~~	119	~~93~~	77		~~70~~	83
561+00 (C) to 564+05 (C&D)		~~1083~~	570	~~335~~	323	~~177~~	79		~~133~~	179
561+87.5 (A&B) to 572+60 (B&C)		~~4237~~	4440	~~1319~~	1353	~~700~~	621		~~525~~	627
564+05 (C&D) to 573+00 (B&C)	UNDESIGNATED	~~2655~~	2408	~~813~~	864	~~428~~	445		~~322~~	277
564+05 (C&D) to 570+10 (D&E)		~~1384~~	1409	~~411~~	738	~~213~~	104		~~160~~	156
567+10 (E) to 570+10 (D&E)		~~1437~~	1460	~~449~~	520	~~215~~	366		~~161~~	235
572+60 (B&C) to 576+29.2 (B) BK. 573+00 (B&C) to 576+65.9 (C) BK.		~~1667~~	1906	~~523~~	650	~~279~~	295		~~209~~	253
570+10 (D&E) to 575+00 (D&E)		~~2369~~	2060.65	~~745~~	775	~~392~~	335		~~295~~	339
Approaches to Project 553+00 to 554+67.5				~~168~~		~~84~~			~~63~~	0
67+12.5 to 70+00 (Includes Continuing Accel. Lane to Sta. 72+45 Including Taper)				~~363~~	200.75	~~190~~			~~143~~	130.15
From Structure Quantities				~~381~~					~~181~~	
Estimated for Irregularities		~~1781~~		~~92~~						
PROJECT TOTALS		*~~19,588~~	16116.65	~~6,527~~	5915.75	~~3,167~~	2479		~~2,566~~	2560.15

*Based on Subbase "T" = 12 inches

Stabilization Based On:
18# E.D.L.A. = 85
Regional Factor = 1.75
Serviceability Index = 2.5

Strength Coefficients:
H.B.P. (R_t = 95) = 0.44
A.B.C. (C.6) (R = 84) = 0.14
A.B.C. (C.1.1) (R = 84) = 0.13

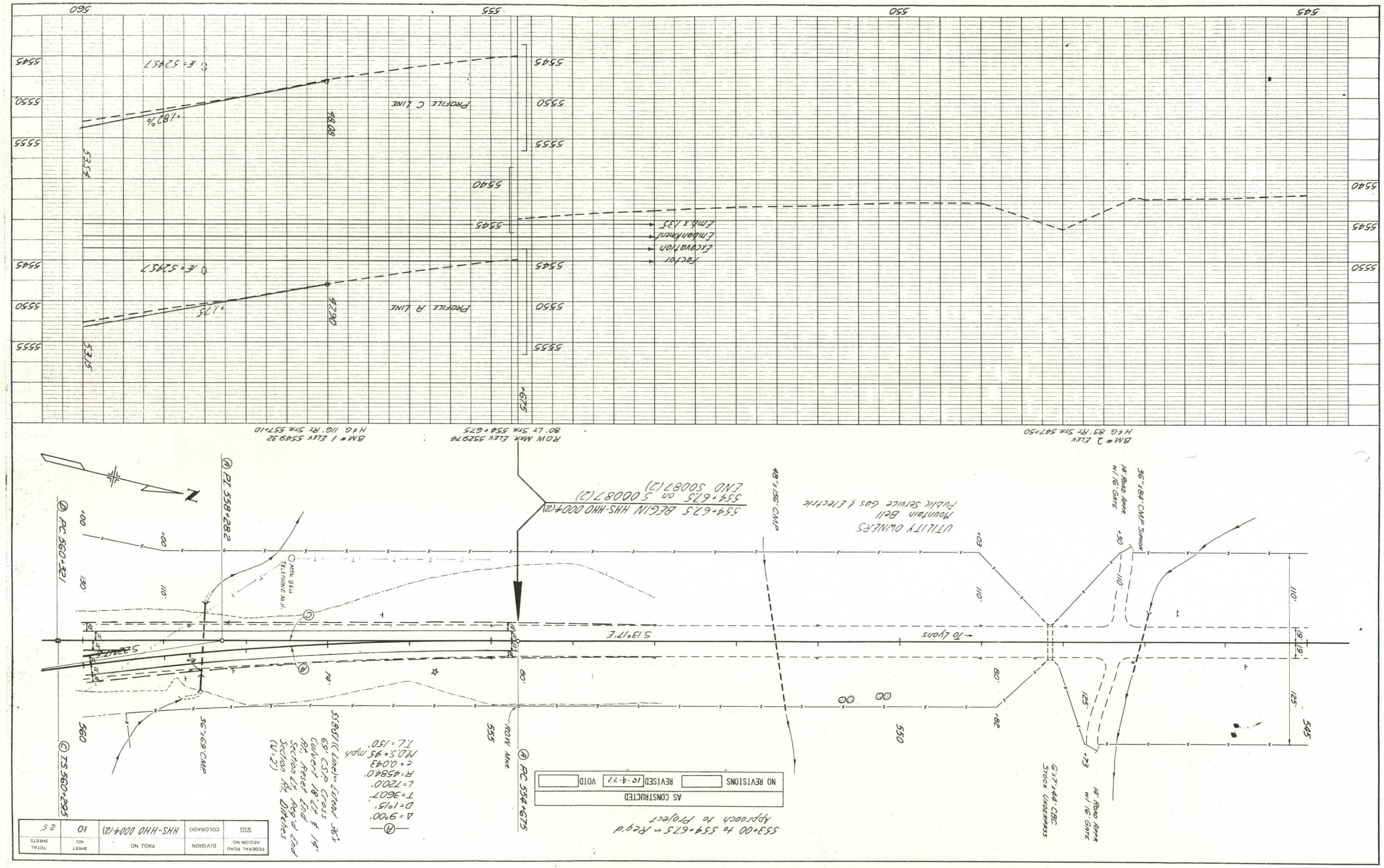

STATE DEPARTMENT OF HIGHWAYS
DIVISION OF HIGHWAYS - STATE OF COLORADO
DOH FORM 134
MAY 1972

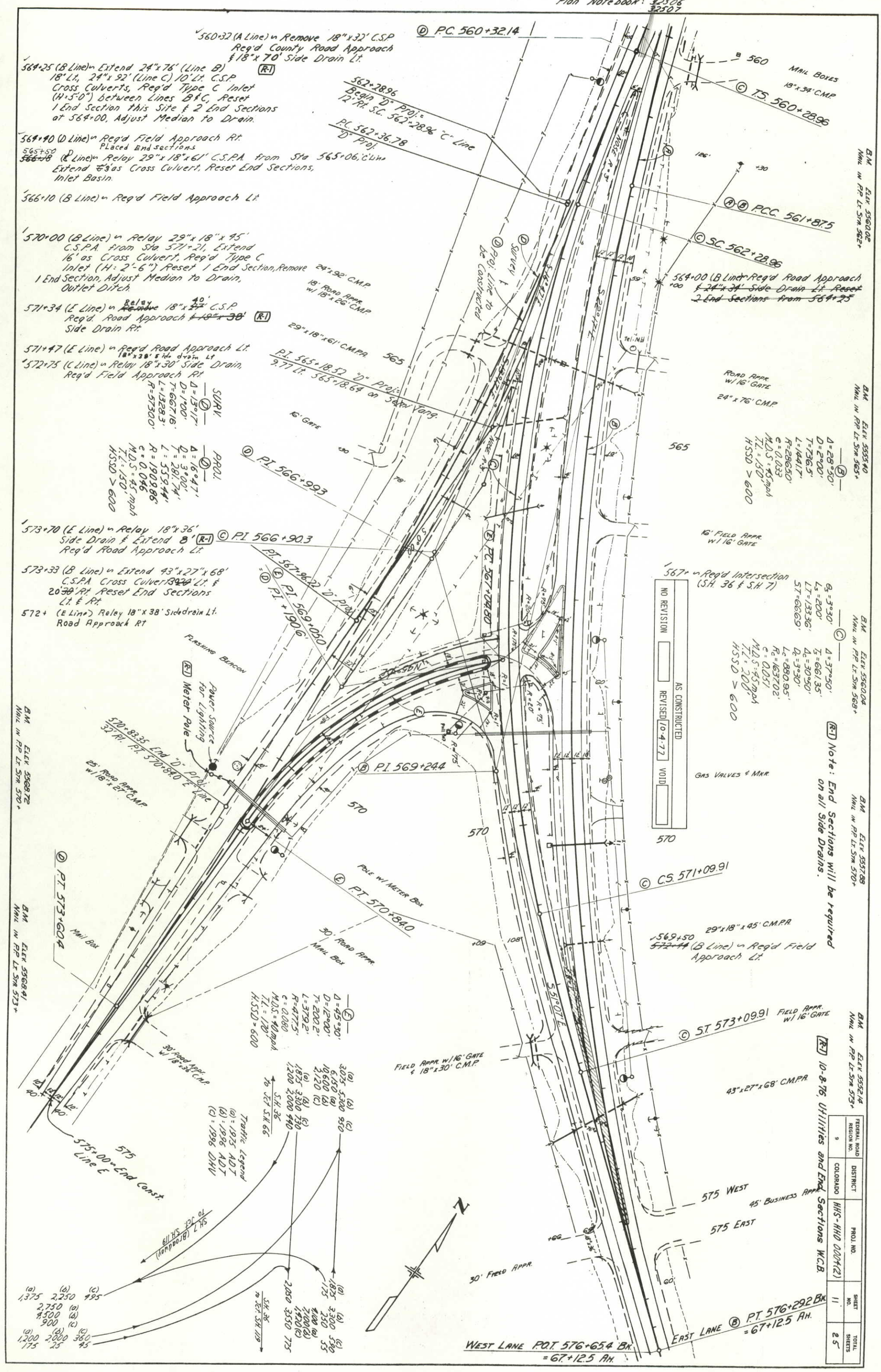

NT OF HIGHWAYS—STATE OF COLORADO
D. H. 136
64

Plan Notebook: 32506
32507

Ⓓ P.C. 560+32.14
562+28.96
Begin "D" Proj. = 12' Rt. S.C. 562+28.96 "C" Line
P.C. 562+36.78
"D" Proj.
560
Mail Boxes
18"x 34' C.M.P.
Ⓒ T.S. 560+28.96
126'
+30
Ⓐ-Ⓑ P.C.C. 561+87.5
Ⓒ S.C. 562+28.96
+00
Tel. MH
Road Appr. w/ 16' Gate
24" x 76' C.M.P.
565
16' Field Appr. w/ 16' Gate
24"x 92' C.M.P.
18' Road Appr. w/ 18"x 26' C.M.P.
29"x 18"x 61' C.M.P.A.
565
P.I. 565+18.52 "D" Proj. = 9.77 Lt. 565+18.64 on Semi Tang.
16' Gate
+90
78'
Ⓓ P.I. 566+99.3
Ⓓ Survey
Ⓓ Proj. Line to be Constructed
Nose R=3'
Ⓒ P.I. 566+90.3
P.T. 567+96.22 "D" Proj.
= Ⓔ P.I. 569+05.0
= Ⓓ P.I. + 190.6'
Ⓔ P.C. 567+04.80
Flashing Beacon
R-1 Meter Pole
Power Source for Lighting
570+83.35 End "D" Proj. 32' Rt. P.T. 570+84.0 "E" Line
25' Road Appr. w/ 18" x 27' C.M.P.
Ⓑ P.I. 569+24.4
570
570
570
Gas Valves & Mkr.
Pole w/ Meter Box
Ⓔ P.T. 570+84.0
30' Road Appr.
Mail Box
Mail Box
Ⓓ P.T. 573+60.4
Ⓒ C.S. 571+09.91
29"x 18" x 45' C.M.P.A.
Ⓒ S.T. 573+09.91
Field Appr. w/ 16' Gate
Field Appr. w/ 16' Gate & 18"x 30' C.M.P.
43"x 27"x 68' C.M.P.A.
30' Road Appr. w/ 18"x 36' C.M.P.
+09
108'
575
575+00 End Const. Line E
575 West
45' Business Appr.
575 East
30' Field Appr.
+66
60'
West Lane P.O.T. 576+65.4 Bk. = 67+12.5 Ah.
East Lane Ⓑ P.T. 576+29.2 Bk. = 67+12.5 Ah.
S.H. 7 (Broadway) to Jct. S.H. 119
S.H. 36 to Jct. S.H. 66
S.H. 36 to Jct. S.H. 119
(a) (b) (c)
3,075 5,300 950
6,150 (a)
10,600 (b)
2,120 (c)
(a) (b) (c)
1,875 3,300 730
1,200 2,000 440
(a) (b) (c)
1,875 3,300 590
175 250 55
4,100 (a)
7,100 (b)
1,420 (c)
2,050 3,550 775
(a) (b) (c)
1,375 2,250 495
2,750 (a)
4,500 (b)
900 (c)
(a) (b) (c)
1,200 2,000 360
175 25 45
N

✓560+32 (A Line) ~ Remove 18"x 32' C.S.P.
Req'd County Road Approach
& 18"x 70' Side Drain Lt.

✓564+25 (B Line) ~ Extend 24"x 76' (Line B) **R-1**
18' Lt., 24"x 92' (Line C) 10' Lt. C.S.P.
Cross Culverts, Req'd Type C Inlet
(H=5'-0") between Lines B & C, Reset
1 End Section this Site & 2 End Sections
at 564+00. Adjust Median to Drain.

✓564+40 (D Line) ~ Req'd Field Approach Rt.
Placed End sections

565+50 ~~566+18~~ (~~B~~ D Line) ~ Relay 29"x 18"x 61' C.S.P.A. from Sta 565+06, C Line
Extend ~~E~~3' as Cross Culvert, Reset End Sections,
Inlet Basin.

✓566+10 (B Line) ~ Req'd Field Approach Lt.

✓570+00 (B Line) ~ Relay 29"x 18"x 45'
C.S.P.A. from Sta. 571+21, Extend
16' as Cross Culvert, Req'd Type C
Inlet (H: 2'-6") Reset 1 End Section, Remove
1 End Section, Adjust Median to Drain,
Outlet Ditch.

571+34 (E Line) ~ ~~Remove~~ Relay 18"x ~~27'~~ 40' C.S.P.
Req'd. Road Approach ~~& 18"x 38'~~ **R-1**
Side Drain Rt.

571+47 (E Line) ~ Req'd Road Approach Lt.
18"x 38' side drain Lt

✓572+75 (C Line) ~ Relay 18"x 30' Side Drain,
Req'd Field Approach Rt.

✓573+70 (E Line) ~ Relay 18"x 36'
Side Drain & Extend 8' **R-1**
Req'd Road Approach Lt.

573+33 (B Line) ~ Extend 43"x 27"x 68'
C.S.P.A. Cross Culvert 30~~20~~' Lt. &
20' ~~30'~~ Rt. Reset End Sections
Lt. & Rt.

572+ (E Line) Reley 18"x 38' Sidedrain Lt.
Road Approach Rt

✓564+00 (B Line) ~ Req'd Road Approach
~~& 24"x 34' Side Drain Lt. Reset~~
~~2 End Sections from 564+25~~

✓567+ ~ Req'd Intersection
(S.H. 36 & S.H. 7)

✓569+50 ~~572+44~~ (B Line) ~ Req'd Field
Approach Lt.

R-1 Note: End Sections will be required
on all Side Drains.

R-1 10-8-76, Utilities and End Sections W.C.B.

SURV.
— Ⓓ —
Δ = 13°17'
D = 1°00'
T = 667.16'
L = 1328.3'
R = 5730.0'

PROJ.
— Ⓓ —
Δ = 16°47'
D = 3°00'
T = 281.74'
L = 559.44'
R = 1909.86'
e = 0.046
M.D.S. = 45 mph
T.L. = 150'
H.S.S.D. > 600

— Ⓑ —
Δ = 28°50'
D = 2°00'
T = 736.5'
L = 1441.7'
R = 2865.0'
e = 0.033
M.D.S. = 45 mph
T.L. = 150'
H.S.S.D. > 600

— Ⓒ —
θs = 3°30'
Ls = 200'
L.T. = 133.36'
S.T. = 66.69'
Δ = 37°50'
Ts = 661.35'
Δc = 30°50'
Dc = 3°30'
Lc = 880.95'
Rc = 1637.02'
e = 0.051
M.D.S. = 45 mph
T.L. = 200'
H.S.S.D. > 600

— Ⓔ —
Δ = 45°30'
D = 12°00'
T = 200.2'
L = 379.2'
R = 477.5'
e = 0.080
M.D.S. = 40 mph
T.L. = 170'
H.S.S.D. > 600

Traffic Legend
(a) = 1975 ADT
(b) = 1996 ADT
(c) = 1996 DHV

B.M. Elev. 5560.02
Nail in P.P. Lt. Sta. 562+

B.M. Elev. 5555.40
Nail in P.P. Lt. Sta. 565+

B.M. Elev. 5560.04
Nail in P.P. Lt. Sta. 568+

B.M. Elev. 5557.88
Nail in P.P. Lt. Sta. 570+

B.M. Elev. 5552.14
Nail in P.P. Lt. Sta. 573+

B.M. Elev. 5568.72
Nail in P.P. Lt. Sta. 570+

B.M. Elev. 5568.41
Nail in P.P. Lt. Sta. 573+

AS CONSTRUCTED					
NO REVISION	☐	REVISED	10-4-77	VOID	☐

FEDERAL ROAD REGION NO.	DISTRICT	PROJ. NO.	SHEET NO.	TOTAL SHEETS
9	COLORADO	HHS-HH0 0004(2)	11	25

STATE DEPARTMENT OF HIGHWAYS
DIVISION OF HIGHWAYS - STATE OF COLORADO
D.O.H. FORM 1-4
MAY 1972

AS CONSTRUCTED			
NO REVISIONS		REVISED 10-4-77	VOID

FEDERAL ROAD REGION NO.	DIVISION	PROJ. NO.	SHEET NO.	TOTAL SHEETS
VIII	COLORADO	HHS-HHO 0004(2)	14	25

(R-1) 10-8-76, End Sections, WCB

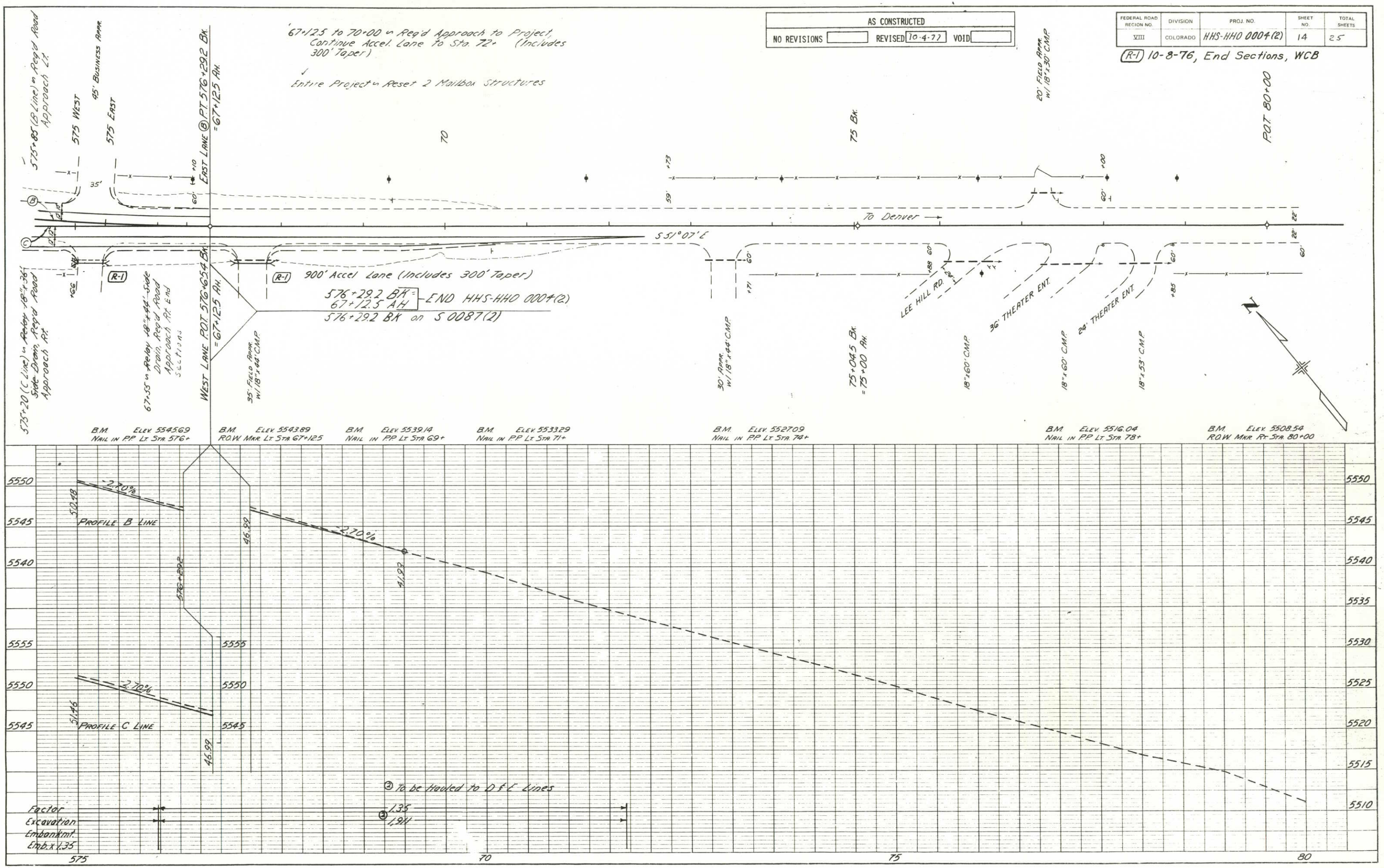

PLAN	DATE	BY
SURVEYED		
PLOTTED		
HIGHWAY CHECKED		
BRIDGE CHECKED		
NOTE BOOK No. 33202		

PROFILE	DATE	BY
SURVEYED		
PLOTTED		
GRADES CHECKED		
BRIDGE CHECKED		
STRUCTURE NOTATIONS CHECKED		
NOTE BOOK No.		

STATE DEPARTMENT OF HIGHWAYS
DIVISION OF HIGHWAYS - STATE OF COLORADO
H. FORM NO. 210
SEPT. 1974

AS-CONSTRUCTED		
NO REVISION 10-4-77	REVISED	VOID

FEDERAL ROAD REGION NO.	DIVISION	PROJECT NO.	SHEET NO.
VIII	COLORADO	HHS-HH0 0004(2)	13/25

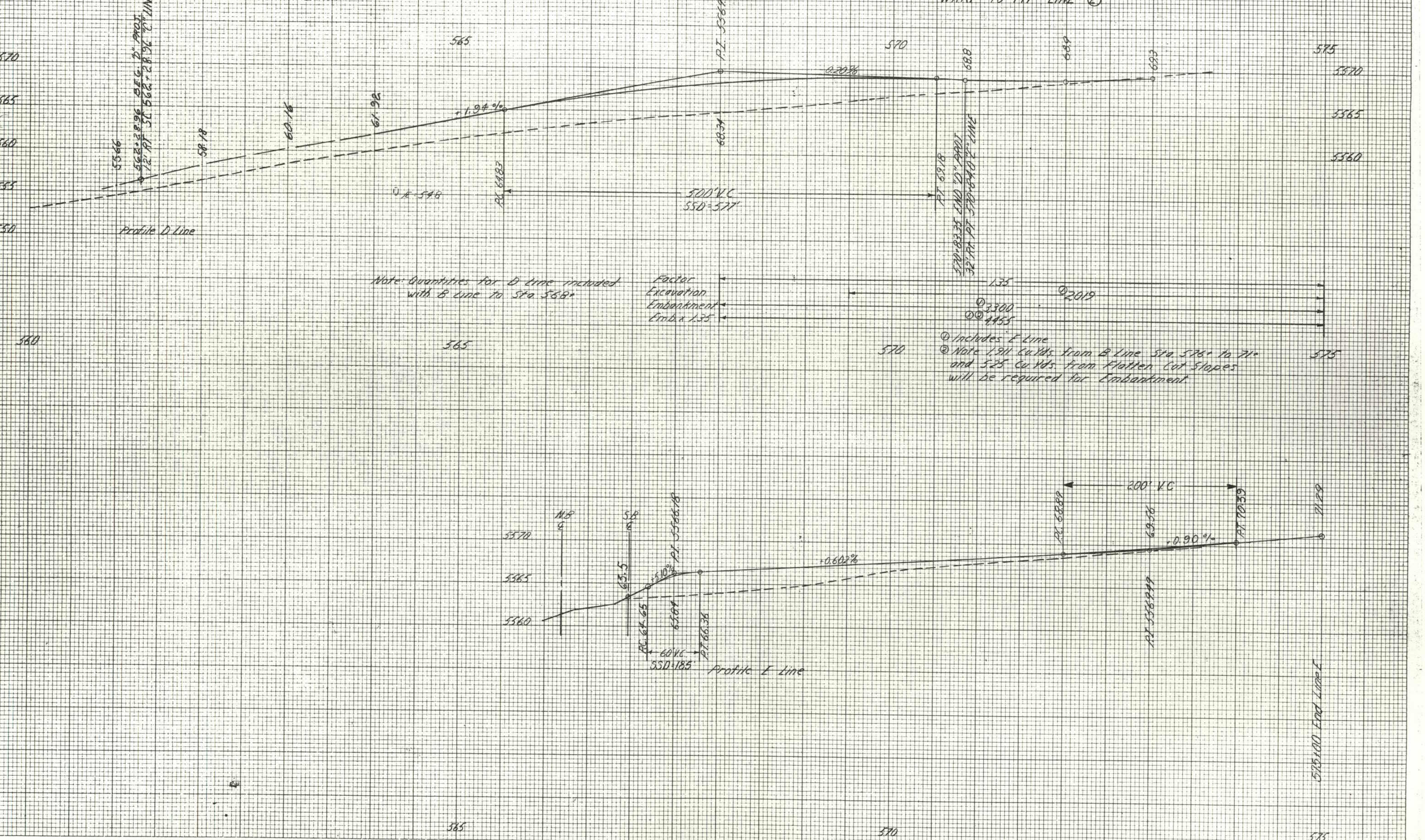

PLATE 3 FULL CROSS SECTION
CHARLES BRUNING COMPANY
MADE IN U.S.A.

FINAL SURVEY	SURVEYED		
NOTE BOOK	PLOTTED		
NO.	TEMPLATE		
	AREAS		
	AREAS CHECKED	BY	DATE

ORIGINAL SURVEY	SURVEYED		
NOTE BOOK	PLOTTED		
NO.	TEMPLATE		
	AREAS		
	AREAS CHECKED	BY	DATE

AS CONSTRUCTED
NO REVISIONS 10-4-77 REVISED VOID

FEDERAL ROAD REGION NO.	DIVISION	PROJECT NO.	SHEET NO.
XIII	COLORADO	HHS-HHO 0004(2)	12/25

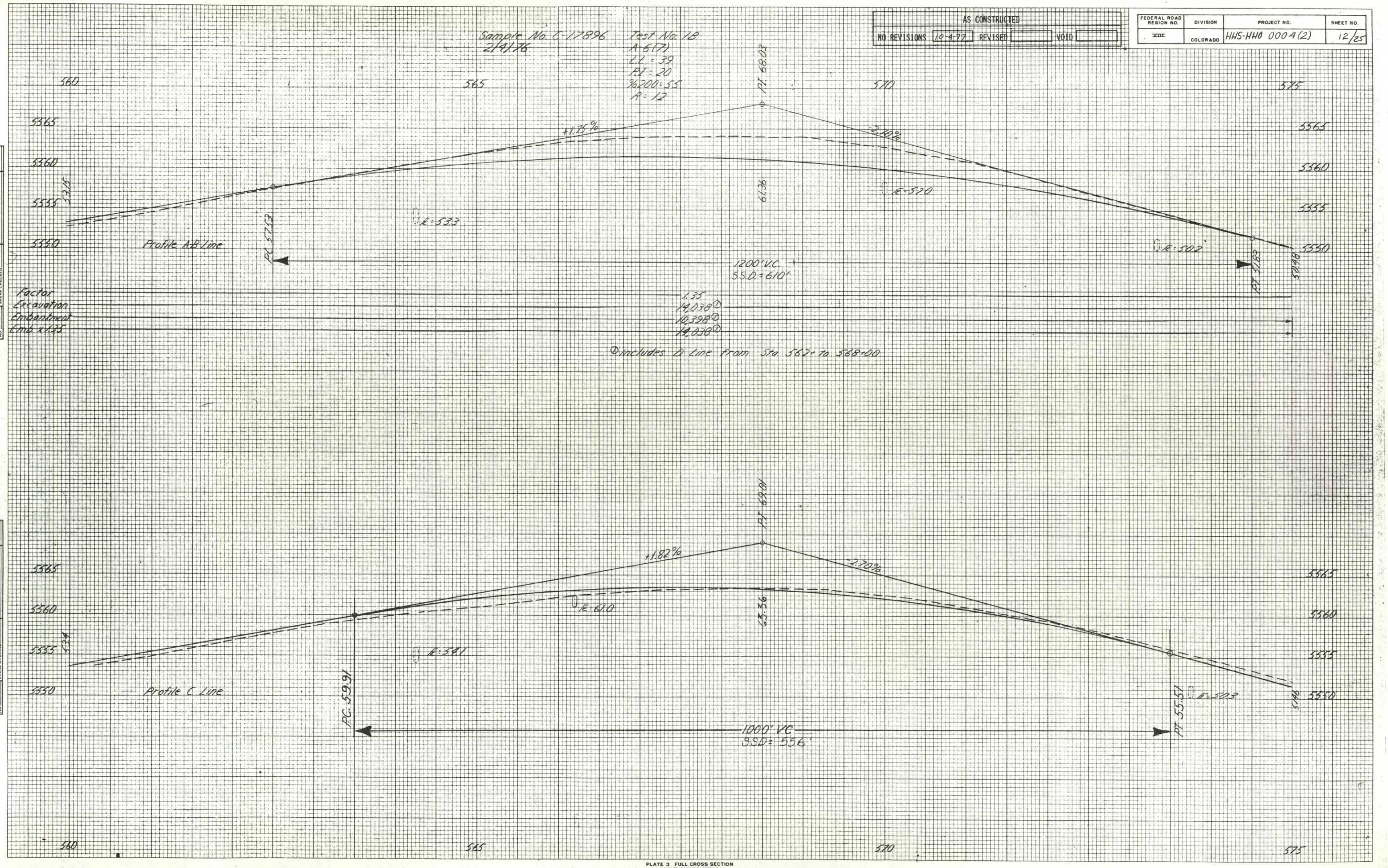

SURVEY NOTE BOOK NO. — SURVEYED — PLOTTED — TRACED — AREAS — AREAS CHECKED — BY — DATE

ORIGINAL SURVEY NOTE BOOK NO. — SURVEYED — PLOTTED — TRACED — AREAS — AREAS CHECKED — BY — DATE

PLATE 3 FULL CROSS SECTION
CHARLES BRUNING COMPANY
MADE IN U.S.A.

FEDERAL ROAD REGION NO.	DIVISION	PROJ. NO.	SHEET NO.	TOTAL SHEETS
VIII	COLORADO	HHS-HHO 0004(2)	15	25

AS CONSTRUCTED

NO REVISION [ ] REVISED [10-4-77] VOID [ ]

TABULATION OF SIGNING QUANTITIES

ITEM NO.	ITEM	UNIT	PROJECT TOTALS
202	Rem. Ground Sign	EA.	7
210	Res. Ground Sign	EA.	26 ~~21~~
614	Sign Panel (Cl. I)	SQ. FT.	17 ~~19~~
614	Sign Panel (Cl. II)	SQ. FT.	193 ~~190~~
614	Sign Panel (Cl. III)	SQ. FT.	44
614	Timber Sign Post (4 x 4)	LIN. FT.	153
614	Timber Sign Post (6 x 6)	LIN. FT.	213
614	Conc. Footing (Ty. 4)	EA.	2
614	Modification Tim. Sign Post	EA.	5

STATE DEPARTMENT OF HIGHWAYS
DIVISION OF HIGHWAYS - STATE OF COLORADO
D.O.H. FORM 126
JULY, 1968

AS CONSTRUCTED		
NO REVISIONS 10-4-77	REVISED	VOID

FEDERAL ROAD REGION NO.	DIVISION	PROJ. NO.	SHEET NO.	TOTAL SHEETS
VIII	COLORADO	HHS-HHO 0004(2)	16	25

TABULATION OF SIGNS

SIGN NO.	SIGN CODE	STATION	SIGN PANEL SIZE	BACK-GROUND COLOR	REMOVE GROUND SIGN (EACH)	REMOVE SIGN STRUCTURE (EACH)	RESET GROUND SIGN (EACH)	MODIFY TIMBER SIGN POST (EACH)	MODIFY STEEL SIGN POST (EACH)	NO. OF POSTS	LENGTH OF POST	POST TYPE (LIN. FT.) 4x4 TIMBER	6x6 TIMBER	W6x12 BEAM	W6x15.5 BEAM	W8x17 BEAM	W8x20 BEAM	W10x21 BEAM	W10x25 BEAM	W12x31 BEAM	W12x40 BEAM	CONC. FOOTING TYPE (EACH) 4	SIGN PANEL (SQ. FT.) CLASS I	CLASS II	CLASS III
1	SPECIAL	550+00	8'x2'-6"	GREEN	THIS SIGN SET AND LATER REMOVED BY DIV. SIGN CREW					2	15'-6"		31												
2		553+00					1																		20.00
3		558+20						1																	
4		555+00					1																		
5		558+15			1																				
6	SW4-2(L)	561+50	DIAMOND 30" SIDES	YELLOW						1	13'-6"	13.5													
7	XW9-1(L)	563+45	DIAMOND 36" SIDES	YELLOW						1	16'-6"		16.5										6.25		
8	XW9-1(L)	564+30	DIAMOND 36" SIDES	YELLOW						1	16'-6"		16.5										9.00		
9		566+00					1																9.00		
10		565+50					1																		
11		567+40			1																				
12		567+10						1																	
13	SPECIAL	567+60	6'x4'	GREEN						2	17'-0"		34												24.00
14		567+80					1																		
15		567+85			1																				
16A	SM3-2-12		24"x12"	WHITE																					
16B	XM1-6-24(7)		24"x24"	WHITE																			2.00		
16C	SM6-1	568+45	21"x15"	WHITE						1	15'-0"		15										4.00		
16D	SM3-4-12		24"x12"	WHITE																			2.19		
16E	XM1-4-24(36)		24"x24"	WHITE																			2.00		
16F	SM6-3		21"x15"	WHITE																			4.00		
17		568+45			1																		2.19		
18		568+50	Set By Division Sign Crew				1																		
19	SW9-2(L)	570+00	DIAMOND 36" SIDES	YELLOW						1	16'-6		16.5										9.00		
20		572+15						1																	
21		572+55			1																				
22		574+00					1																		
23	SR1-1	574+60	OCTAGON 30"x30"	RED			1			1	13'-0"	13													
24A	XR4-7		36"x48"	WHITE																			6.25		
24B	EXR4-7	560+70	36"x24"	WHITE						1	16'-6"		16.5										12.00		
24C	SW4-2(L)		DIAMOND 30" SIDES	YELLOW																			6.00		
25		562+25					1																6.25		
26	SR6-1(R)	564+00	36"x12"	BLACK						1	12'-0"	12										2			
27	SR6-1(R)	566+10	36"x12"	BLACK						1	12'-0"	12											3.00		
28	SW12-1	564+85 "D" LINE	DIAMOND 24" SIDES	YELLOW						1	12'-0"	12											3.00		
29	SR6-1(R)	564+60 "D" LINE	36"x12"	BLACK						1	12'-0"	12											4.00		
30A	XW9-1(L)	565+60	DIAMOND 36" SIDES	YELLOW						1	16'-6"		16.5										3.00		
30B	SR5-9		36"x24"	RED																			9.00		
																							6.00		

NOTES:

1. SEE PLANS FOR FABRICATION DETAILS OF REGULATORY SIGNS, WARNING SIGNS, ROUTE MARKERS, AND AUXILIARY MARKERS.
2. PANELS FOR CLASS I SIGNS SHALL BE EITHER SINGLE SHEET ALUMINUM OR SINGLE SHEET STEEL AND SHALL BE REFLECTORIZED AS INDICATED. SEE STANDARD S-614-20B.
3. PANELS FOR CLASS II SIGNS SHALL BE EITHER SINGLE SHEET ALUMINUM OR SINGLE SHEET STEEL, SHALL HAVE BACKING ZEES, AND SHALL BE REFLECTORIZED AS INDICATED. SEE STANDARDS S-614-21B AND S-614-22C.
4. PANELS FOR CLASS III SIGNS SHALL BE EITHER LAMINATED ALUMINUM, EXTRUDED ALUMINUM, OR SHEET ALUMINUM. SEE STANDARDS S-614-23C, S-614-24B AND S-614-25C.
5. CLASS III SIGNS WITH A GREEN OR BLUE BACKGROUND SHALL BE FABRICATED FROM EITHER LAMINATED ALUMINUM OR SHEET ALUMINUM AND SHALL HAVE A REFLECTORIZED BACKGROUND. CLASS III SIGNS WITH A BLACK BACKGROUND SHALL BE FABRICATED FROM EITHER LAMINATED ALUMINUM OR EXTRUDED ALUMINUM AND SHALL HAVE A PORCELAIN ENAMELED BACKGROUND.
6. LEGEND AND BORDER ON ALL CLASS III SIGNS SHALL BE WHITE CUTOUT ALUMINUM WITH REFLEX REFLECTORS OR APPROVED ALTERNATE.
7. FOR TYPICAL GROUND SIGN PLACEMENT, SEE STANDARD S-614-19B.
8. FOR DETAILS OF SIGN SUPPORTS FOR GROUND SIGNS SEE STANDARD S-614-26C.
9. FOR DETAILS OF FOOTINGS, PEDESTALS, AND SIGN ISLANDS SEE STANDARD S-614-27C.
10. POST LENGTHS ARE APPROXIMATE ONLY. EXACT LENGTHS TO BE DETERMINED BY THE ENGINEER.

STATE DEPARTMENT OF HIGHWAYS
DIVISION OF HIGHWAYS STATE OF COLORADO
D.O.H. FORM 126
JULY, 1968

AS CONSTRUCTED		
NO REVISIONS	REVISED 10-4-77	VOID

FEDERAL ROAD REGION NO.	DIVISION	PROJ. NO.	SHEET NO.	TOTAL SHEETS
VIII	COLORADO	HHS-HHO 0004 (2)	17	25

TABULATION OF SIGNS

SIGN NO.	SIGN CODE	STATION	SIGN PANEL SIZE	BACK-GROUND COLOR	REMOVE GROUND SIGN (EACH)	REMOVE SIGN STRUCTURE (EACH)	RESET GROUND SIGN (EACH)	MODIFY TIMBER SIGN POST (EACH)	MODIFY STEEL SIGN POST (EACH)	NO. OF POSTS	LENGTH OF POST	POST TYPE (LIN. FT.) 4 x 4 TIMBER	6 x 6 TIMBER	~~W6x12 BEAM~~	~~W6x15.5 BEAM~~	~~W8x17 BEAM~~	~~W8x20 BEAM~~	~~W10x21 BEAM~~	~~W10x25 BEAM~~	~~W12x31 BEAM~~	~~W12x40 BEAM~~	CONC. FOOTING TYPE (EACH) ~~2~~	~~3~~	4	~~5~~	~~6~~	~~7~~	~~8~~	SIGN PANEL (SQ. FT.) CLASS I	CLASS II	CLASS III
31A	XW9-1(L)	566+00	DIAMOND 36" SIDES	YELLOW						1	16'-6"		16.5																		
31B	SR5-9		36"x24"	RED																											
32		567+50					1																								
33		567+30					1																								
34	SR5-1	567+50	30"x30"	WHITE						1	13'	13																		6.25	
35		567+25 "E" LINE					1																								
36	SW4-1(L)	568+00 "D" LINE	DIAMOND 30" SIDES	YELLOW						1	13'-6"	13.5																		6.25	
37		568+40 "E" LINE			1																										
38	SR1-2	569+10 "E" LINE	TRIANGLE 36" SIDES	WHITE						1	13'-6"	13.5																		3.90	
39		569+35 "E" LINE			1																										
40		570+60 "D" LINE					1																								
41		570+90 "E" LINE					1																								
42		572+00 "E" LINE					1																						~~2.00~~		
43A	SM3-2-12	575+00 "E" LINE	24"x12"	WHITE						1	12'-6"	12.5																	4.00		
43B	XM1-6-24(7)		24"x24"	WHITE																											
44		573+00 "E" LINE					1																								
45	SR3-7(R)	570+95 "E" LINE	30"x30	WHITE						1	13'	13																		6.25	
46		569+50 "E" LINE					1																								
47	SR3-7(R)	568+25 "E" LINE	30"x30"	WHITE						1	13'	13																		6.25	
48		567+25 "E" LINE					1																								
49		568+25					1																								
50	IW4-2(L)	570+80	DIAMOND 48" SIDES	YELLOW						1	17'-0"		17																	16.00	
51A	IW4-2(L)		DIAMOND 48" SIDES	YELLOW																										16.00	
51B	XR4-7	571+35	36"x48"	WHITE						1	17'-0"		17																	12.00	
51C	EXR4-7		36"x24"	WHITE																										6.00	
52		69+35						1																							
53		77+50						1																							
54		68+50					1																								
55		70+50					1																								
56		72+50					1																								
	SR1-2	569+ "C" Line	TRIANGLE 36" SIDES	WHITE						1	13'6"	13.5																		3.90	
		PROJECT TOTALS			7		21	5				153.0	213.0											2					17.00 ~~19.00~~	~~189.03~~ 192.93	44

NOTES:

1. SEE PLANS FOR FABRICATION DETAILS OF REGULATORY SIGNS, WARNING SIGNS, ROUTE MARKERS, AND AUXILIARY MARKERS.
2. PANELS FOR CLASS I SIGNS SHALL BE EITHER SINGLE SHEET ALUMINUM OR SINGLE SHEET STEEL AND SHALL BE REFLECTORIZED AS INDICATED. SEE STANDARD S-614-20B.
3. PANELS FOR CLASS II SIGNS SHALL BE EITHER SINGLE SHEET ALUMINUM OR SINGLE SHEET STEEL, SHALL HAVE BACKING ZEES, AND SHALL BE REFLECTORIZED AS INDICATED. SEE STANDARDS S-614-21B AND S-614-22C.
4. PANELS FOR CLASS III SIGNS SHALL BE EITHER LAMINATED ALUMINUM, EXTRUDED ALUMINUM, OR SHEET ALUMINUM. SEE STANDARDS S-614-23C, S-614-24B AND S-614-25C.
5. CLASS III SIGNS WITH A GREEN OR BLUE BACKGROUND SHALL BE FABRICATED FROM EITHER LAMINATED ALUMINUM OR SHEET ALUMINUM AND SHALL HAVE A REFLECTORIZED BACKGROUND. CLASS III SIGNS WITH A BLACK BACKGROUND SHALL BE FABRICATED FROM EITHER LAMINATED ALUMINUM OR EXTRUDED ALUMINUM AND SHALL HAVE A PORCELAIN ENAMELED BACKGROUND.
6. LEGEND AND BORDER ON ALL CLASS III SIGNS SHALL BE WHITE CUTOUT ALUMINUM WITH REFLEX REFLECTORS OR APPROVED ALTERNATE.
7. FOR TYPICAL GROUND SIGN PLACEMENT, SEE STANDARD S-614-19B.
8. FOR DETAILS OF SIGN SUPPORTS FOR GROUND SIGNS SEE STANDARD S-614-26C.
9. FOR DETAILS OF FOOTINGS, PEDESTALS, AND SIGN ISLANDS SEE STANDARD S-614-27C.
10. POST LENGTHS ARE APPROXIMATE ONLY. EXACT LENGTHS TO BE DETERMINED BY THE ENGINEER.

UNIFORM STANDARD REGULATORY SIGNS

FEDERAL ROAD REGION NO.	DISTRICT	PROJ. NO.	SHEET NO.	TOTAL SHEETS
VIII	COLORADO	HHS-HHO 0004(2)	18	25

AS CONSTRUCTED

NO REVISION 10-4-77 REVISED ____ VOID ____

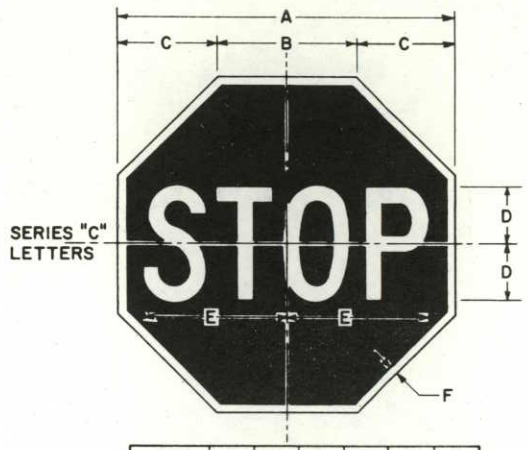

CODE	A	B	C	D	E	F
CRI-1	24"	$9\frac{13}{16}$"	$7\frac{1}{32}$"	4"	$10\frac{1}{8}$"	$\frac{5}{8}$"
SRI-1	30"	$12\frac{7}{16}$"	$8\frac{25}{32}$"	5"	$12\frac{5}{8}$"	$\frac{3}{4}$"
XRI-1	48"	$19\frac{7}{8}$"	$14\frac{1}{16}$"	8"	$20\frac{1}{4}$"	$\frac{7}{8}$"

Legend and border - Reflectorized white.
Background - Reflectorized red (Reverse screened on reflective sheeting).

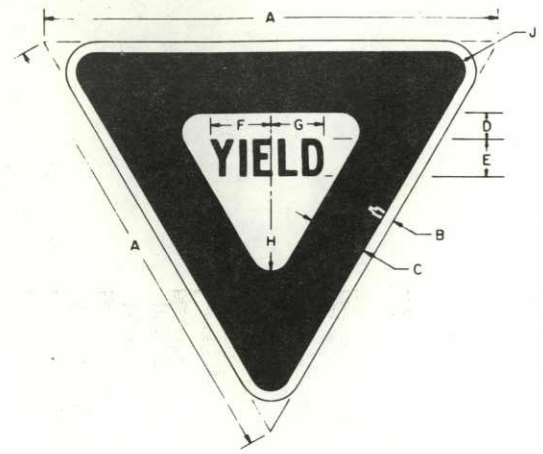

CODE	A	B	C	D	E	F	G	H	J
SRI-2	36	$\frac{3}{4}$	5	2	3C	$4\frac{23}{32}$	$4\frac{1}{4}$	$1\frac{1}{4}$	2
XRI-2	48	1	6	$2\frac{3}{4}$	4C	$6\frac{1}{8}$	$5\frac{7}{8}$	2	3
IRI-2	60	$1\frac{1}{2}$	8	$3\frac{1}{2}$	5C	$7\frac{23}{32}$	$7\frac{1}{4}$	$2\frac{1}{2}$	4

Background — Reflectorized White
Legend and Border - Reflectorized Red (Reverse screened on reflective sheeting)

SR3-7(R)
XR3-7(R)

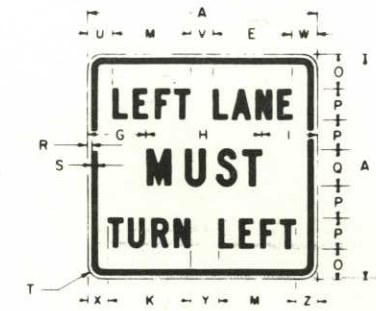

SR3-7(L)
XR3-7(L)

CODE	A	B	C	D	E	F	G	H	I	J	K	L	M	N	O	P	Q	R	S	T	U	V	W	X	Y	Z
SR3-7(R)	30	$2\frac{11}{16}$	$12\frac{7}{16}$	$2\frac{1}{8}$	$10\frac{5}{8}$	$2\frac{1}{2}$	$7\frac{3}{4}$	$14\frac{5}{16}$	$7\frac{5}{16}$	$2\frac{1}{4}$	$10\frac{3}{4}$	$2\frac{3}{4}$	—	$2\frac{3}{16}$	$4\frac{1}{2}$	4" "C"	5	$\frac{1}{2}$	$\frac{3}{4}$	$1\frac{7}{8}$R	—	—	—	—	—	—
XR3-7(R)	48	$5\frac{5}{32}$	$17\frac{13}{32}$	$4\frac{1}{4}$	$15\frac{27}{32}$	$4\frac{29}{32}$	$13\frac{9}{32}$	$21\frac{11}{16}$	$13\frac{9}{32}$	$5\frac{3}{16}$	$16\frac{5}{32}$	4	—	$5\frac{3}{16}$	8	6" "C"	8	$\frac{1}{2}$	$\frac{3}{4}$	3R	—	—	—	—	—	—
SR3-7(L)	30	—	—	—	$10\frac{3}{8}$	—	$7\frac{1}{4}$	$14\frac{15}{16}$	$7\frac{5}{16}$	—	$10\frac{3}{4}$	—	10	—	$4\frac{1}{2}$	4" "C"	5	$\frac{1}{4}$	$\frac{1}{2}$	$1\frac{7}{8}$R	$3\frac{7}{16}$	$3\frac{7}{16}$	$2\frac{1}{8}$	$2\frac{1}{4}$	$3\frac{1}{4}$	$2\frac{1}{4}$
XR3-7(L)	48	—	—	—	$15\frac{27}{32}$	—	$13\frac{9}{32}$	$21\frac{11}{16}$	$13\frac{9}{32}$	—	$16\frac{5}{32}$	—	$14\frac{29}{32}$	—	8	6" "C"	8	$\frac{1}{4}$	$\frac{7}{8}$	3R	$6\frac{11}{32}$	5	$6\frac{5}{32}$	$6\frac{5}{32}$	6	$6\frac{5}{32}$

Legend and Border are black process paint — Background and Margin are reflectorized white

NOTES:

1. See applicable Standard for installation details: Class I or Class II as denoted in the Tabulation of Signs.
2. Galvanized Sheet Steel shall be hot dip Galvanized sheets of structural quality, 0.0598" min. thick., Grade A per ASTM Spec. A446-60T, 2 oz. coating class with a light Phosphate coating on surfaces that are to receive reflective sheeting per Federal Spec. TT-C-490 for Galvanized sheets.

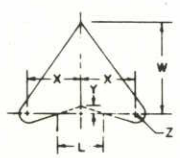

ARROW DETAILS	W	X	Y	Z
SR4-7	$8\frac{1}{8}$	$4\frac{11}{16}$	$\frac{3}{8}$	$\frac{3}{4}$
XR4-7	$12\frac{3}{16}$	$7\frac{1}{32}$	$\frac{15}{16}$	$1\frac{1}{8}$
IR4-7	$16\frac{1}{4}$	$9\frac{3}{8}$	$1\frac{1}{4}$	$1\frac{1}{2}$

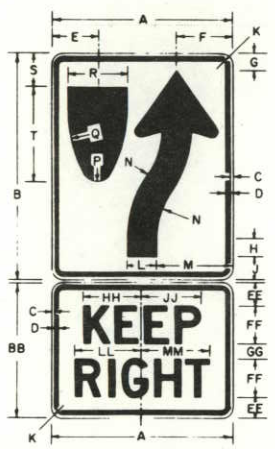

Background - Reflectorized white
Legend and Border - Screen processed black

SYMBOL PANEL	A	B	C	D	E	F	G	H	J	K	L	M	N	P	Q	R	S	T
SR4-7	24	30	$\frac{3}{8}$	$\frac{3}{8}$	6	$7\frac{1}{2}$	$2\frac{1}{4}$	$2\frac{1}{2}$	3	$1\frac{1}{2}$	4	10	11	2	30	8	$4\frac{1}{2}$	$12\frac{1}{2}$
XR4-7	36	48	$\frac{3}{8}$	$\frac{7}{8}$	9	$11\frac{1}{4}$	$3\frac{3}{8}$	$3\frac{3}{4}$	$4\frac{1}{2}$	$2\frac{1}{4}$	6	15	$16\frac{1}{2}$	3	45	12	$6\frac{3}{4}$	$18\frac{3}{4}$
IR4-7	48	60	$\frac{3}{4}$	$1\frac{1}{4}$	12	15	$4\frac{1}{2}$	5	6	3	8	20	22	4	60	16	9	25

WORD PANEL	A	BB	C	D	EE	FF	GG	HH	JJ	K	LL	MM
ESR4-7	24	18	$\frac{3}{8}$	$\frac{3}{8}$	3	5D	2	$8\frac{1}{16}$	$8\frac{3}{4}$	$1\frac{1}{2}$	$9\frac{1}{2}$	$9\frac{11}{16}$
EXR4-7	36	24	$\frac{3}{8}$	$\frac{7}{8}$	$3\frac{1}{2}$	7D	3	$10\frac{37}{64}$	$11\frac{1}{2}$	$2\frac{1}{4}$	12	$12\frac{17}{32}$
EIR4-7	48	36	$\frac{3}{4}$	$1\frac{1}{4}$	$6\frac{1}{2}$	9D	5	$13\frac{3}{8}$	$14\frac{37}{64}$	3	$15\frac{17}{32}$	16

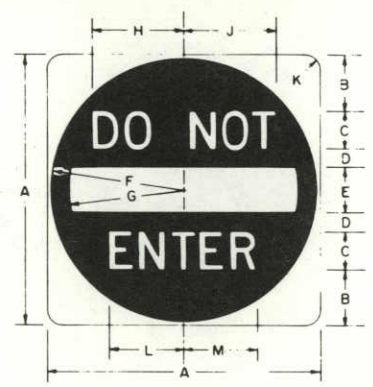

CODE	A	B	C	D	E	F	G	H	I	J	K	L	M
SR5-1	30	$6\frac{1}{2}$	4D	2	5	$14\frac{1}{2}$	$12\frac{1}{2}$	$9\frac{1}{2}$	$9\frac{21}{32}$	$1\frac{7}{8}$	$7\frac{3}{4}$	$7\frac{3}{4}$
XR5-1	36	$7\frac{1}{2}$	5D	$2\frac{1}{2}$	6	$17\frac{1}{2}$	15	$11\frac{7}{8}$	$12\frac{5}{64}$	$2\frac{1}{4}$	$9\frac{11}{16}$	$9\frac{47}{64}$
IR5-1	48	11	6D	3	8	$23\frac{1}{2}$	20	$14\frac{1}{4}$	$14\frac{63}{32}$	3	$11\frac{5}{8}$	$11\frac{61}{32}$

Background and Legend - Reflectorized White
Circle - Reflectorized Red (Reverse screened on reflective sheeting)

CODE	A	B	C	D	E	F	G	H	I	J	K	L	M
SR5-1A	24	18	$\frac{3}{8}$"	$\frac{3}{8}$"	$5\frac{1}{2}$"	$6\frac{7}{16}$"	$5\frac{11}{32}$"	$3\frac{11}{16}$"	$\frac{3}{8}$"	4"-D	3	$\frac{1}{2}$	$1\frac{7}{8}$"R
SR5-9	36"	24"	$5\frac{1}{64}$"	$25\frac{19}{32}$	$5\frac{61}{64}$"	$9\frac{31}{32}$"	$16\frac{29}{64}$"	$9\frac{41}{64}$"	$4\frac{1}{2}$"	6"-D	3"	$\frac{5}{8}$"	$1\frac{1}{2}$"R
IR5-9	48"	30"	$6\frac{29}{64}$"	$35\frac{3}{64}$"	$6\frac{1}{2}$"	$12\frac{7}{16}$"	$23\frac{9}{64}$"	$12\frac{27}{64}$"	$5\frac{1}{2}$"	7"-E	5"	$\frac{3}{4}$"	$1\frac{7}{8}$"R

Legend and border-Reflectorized white.
Background - Reflectorized red (Reverse screened on reflective sheeting.)

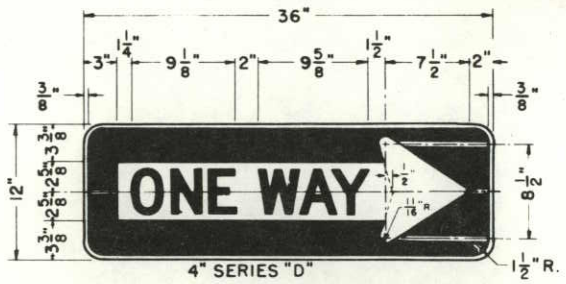

4" SERIES "D"

SR6-1(R or L)

Reverse Arrow Design for Left.
Legend and border area-Screen processed black.
Margin and arrow background-Reflectorized white.

UNIFORM STANDARD WARNING SIGNS

FEDERAL ROAD REGION NO	DISTRICT	PROJ. NO.	SHEET NO	TOTAL SHEETS
VIII	COLORADO	HHS-HHO 0004(2)	19	25

AS CONSTRUCTED

NO REVISIONS 10 4 77 REVISED VOID

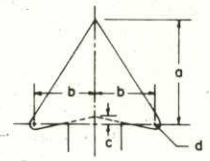

ARROW DETAILS	a	b	c	d
SW4-1	8 3/4	5	5/8	3/4
IW4-1	14	8	1	1 1/4

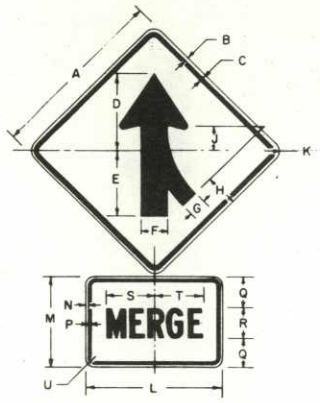

Reverse symbol design for left.

Background - Reflectorized Yellow.
Legend and Border - Screen Processed Black.

SYMBOL PANEL	A	B	C	D	E	F	G	H	J	K
SW4-1	30	1/2	3/4	13	11	4 3/8	3	5 1/4	4 1/4	2
IW4-1	48	3/4	1 1/4	20 1/2	17 1/2	7	4 3/4	8 3/8	6 1/2	3

WORD PANEL	L	M	N	P	Q	R	S	T	U
ESW4-1	24	18	3/8	1/2	6	6C	10 7/32	10 15/64	1 1/2
EIW4-1	36	24	3/8	5/8	8	8C	12 3/4	12 3/4	1 1/2

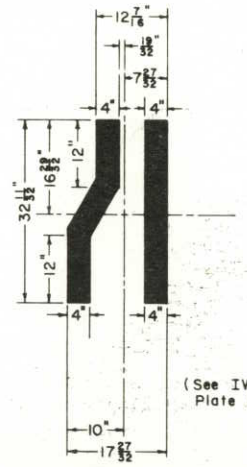

(See IW4-1 for Plate Details)

IW4-2(L)

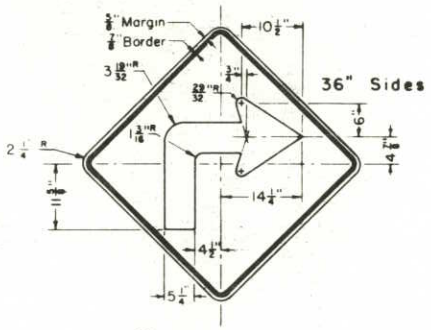

① XW1-1(R)

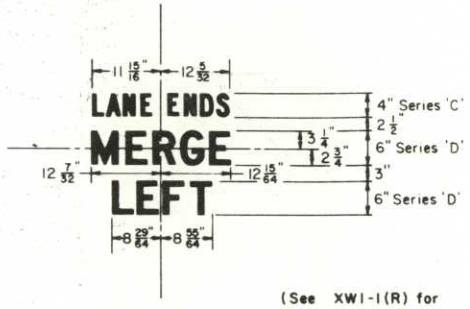

(See XW1-1(R) for Plate Details)

SW9-2(L)

XW9-1(L)

TO BE FURNISHED WITH SPECIAL SIGN LAYOUTS

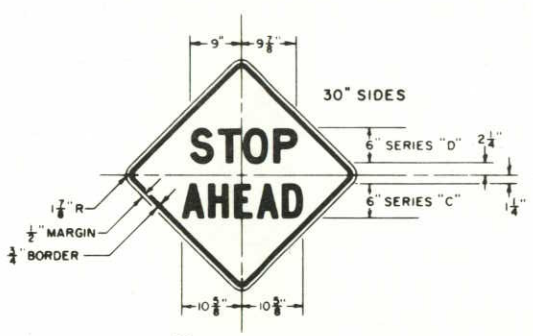

① SW3-1

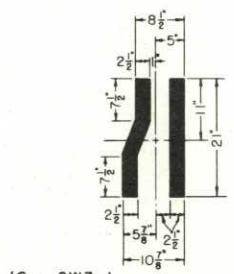

(See SW3-1 for Plate Details)

SW4-2(L)

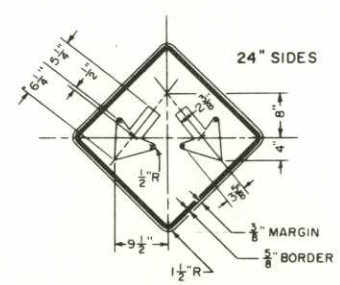

SW12-1

NOTES:

1. All Warning Signs shall have a Screen Processed Black Legend and Border on a Reflectorized Yellow Background.
2. Galvanized Sheet Steel shall be hot dip Galvanized sheets of structural quality, 0.0598" min. thick., Grade A per ASTM Spec. A446-60T, 2 oz. coating class with a light Phosphate coating on surfaces that are to receive reflective sheeting per Federal Spec. TT-C-490 for Galvanized sheets.
3. See applicable Standard for installation details: Class I or Class II as denoted in the Tabulation of Signs.

PH FORM NO. 627
REV. JANUARY 1975

CROSS SECTIONS AT CLASS III SIGN LOCATIONS

FEDERAL ROAD REGION NO.	DIVISION	PROJ. NO.	SHEET NO.	TOTAL SHEETS
VIII	COLORADO	HHS-HHO 0004(2)	20	25

AS CONSTRUCTED
NO REVISIONS 10-4-77 REVISED VOID

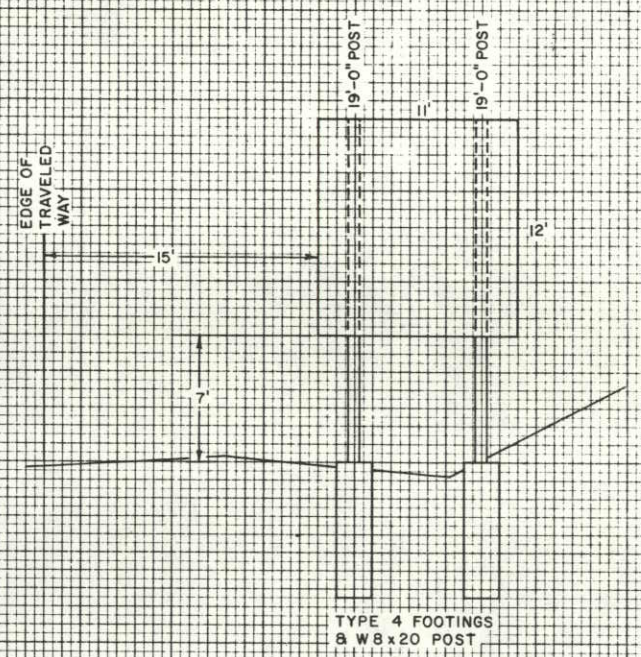

SIGN NO. 25
STA. 562+25

ORIGINAL SURVEY		BY	DATE
	SURVEYED		
	PLOTTED		
	TEMPLATE		
	AREAS		
	AREAS CHECKED		
NOTE BOOK NO.			

SURVEY		BY	DATE
	SURVEYED		
	PLOTTED		
	TEMPLATE		
	AREAS		
	AREAS CHECKED		
NOTE BOOK NO.			

AS CONSTRUCTED			
NO REVISIONS	10-4-77	REVISED	VOID

FEDERAL-ROAD REGION NO.	DIVISION	PROJ. NO.	SHEET	TOTAL SHEETS
VIII	COLORADO	HHS-HHO 0004(2)	21	25

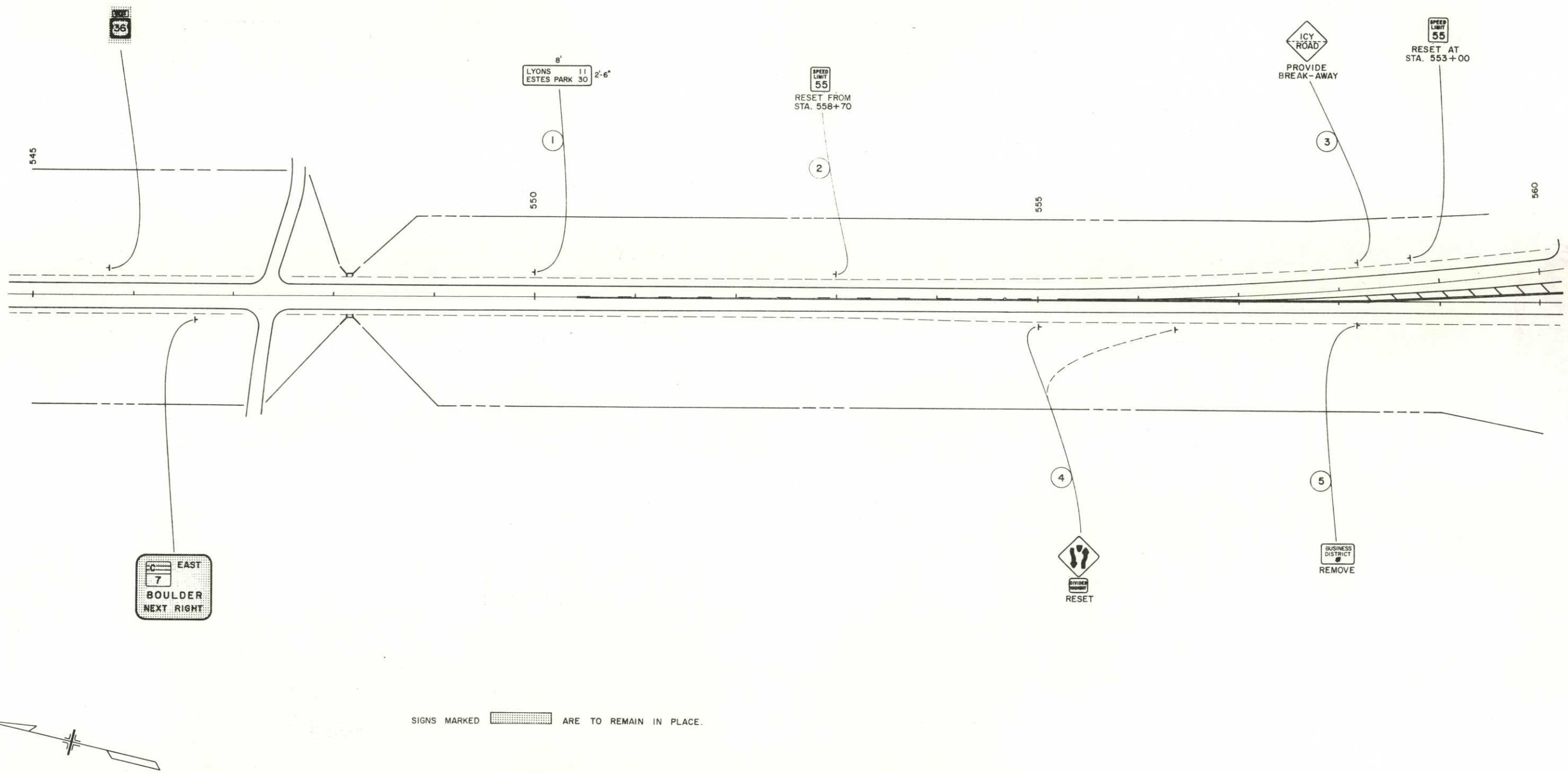

SIGNS MARKED ▒▒▒▒ ARE TO REMAIN IN PLACE.

JUNCTION U.S. 36 & S.H. 7 N. of BOULDER

FEDERAL ROAD REGION NO.	DIVISION	PROJ. NO.	SHEET NO.	TOTAL SHEETS
VIII	COLORADO	HHS-HHO 0004(2)	22	25

AS CONSTRUCTED

NO REVISION ☐ REVISED 10-4-77 VOID ☐

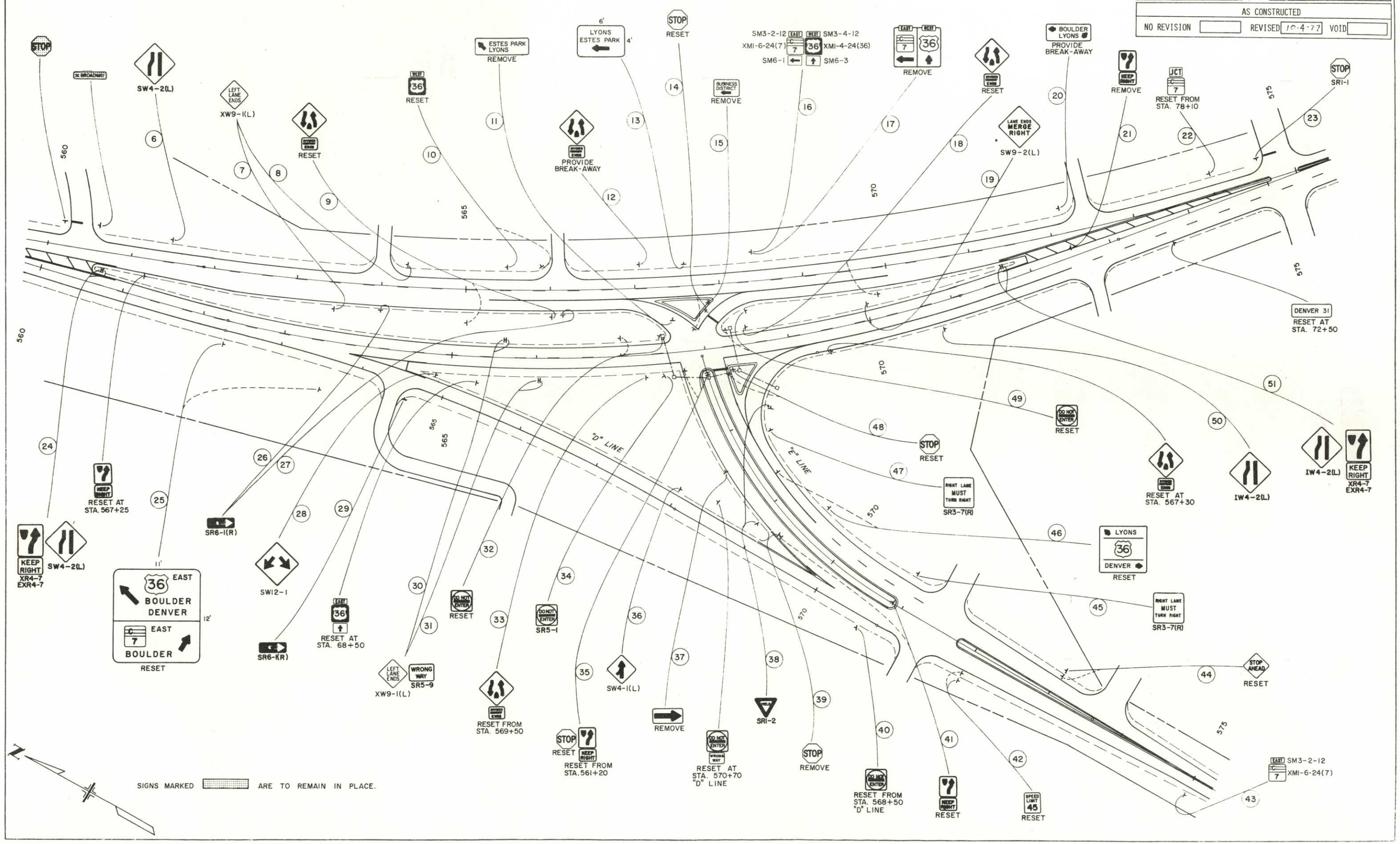

VISION OF HIGHWAYS, STATE OF COLORADO
. O. H. FORM NO. 126
ev. October, 1972

FEDERAL ROAD REGION NO.	DIVISION	PROJ. NO.	SHEET NO.	TOTAL SHEETS
VIII	COLORADO	HHS-HHO 0004(2)	23	25

AS CONSTRUCTED

NO REVISIONS 10-4-77 REVISED VOID

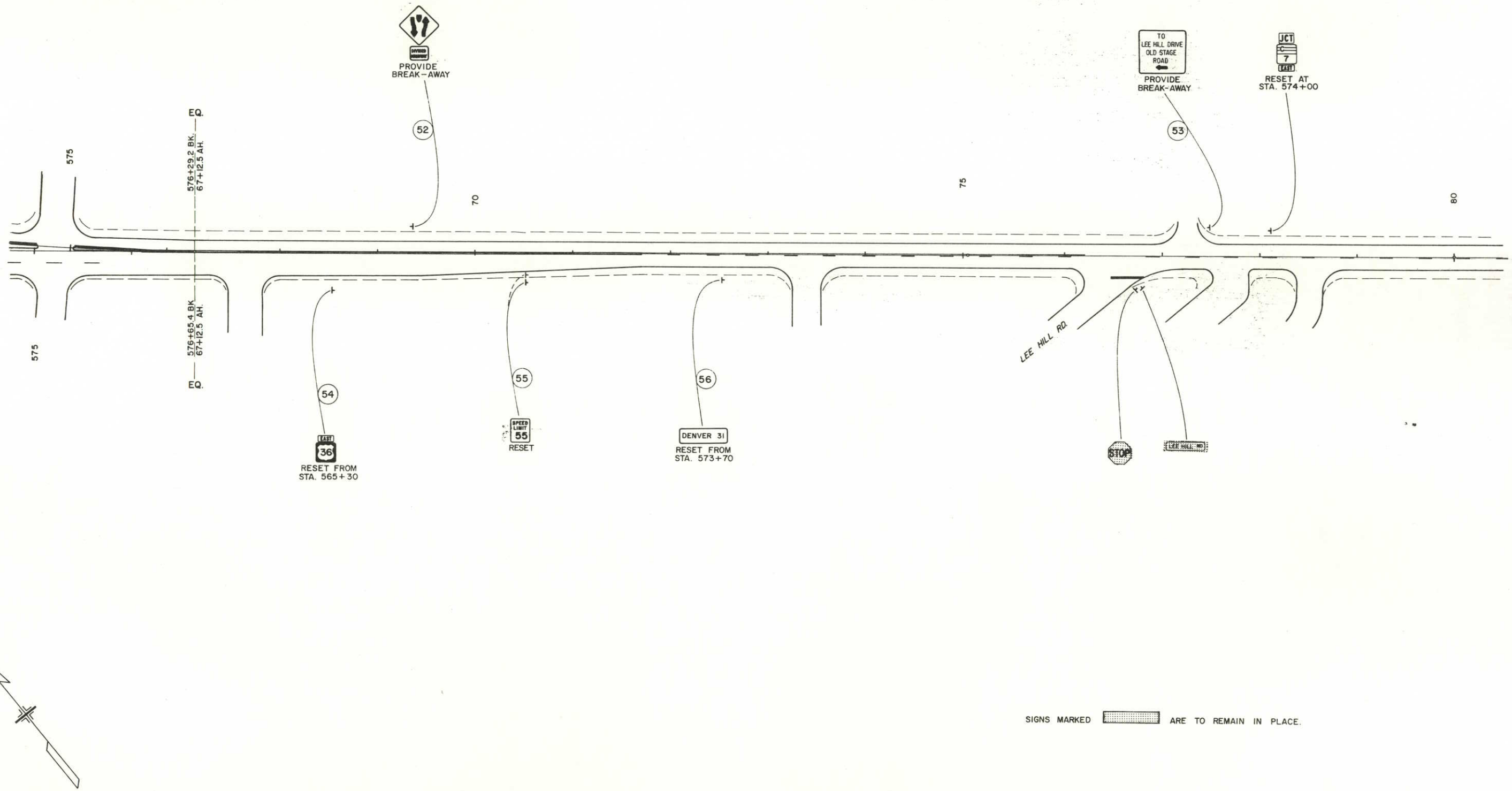

SIGNS MARKED ▒ ARE TO REMAIN IN PLACE.

STANDARD M-100-A

(MAY 11, 1973)

FEDERAL ROAD REGION NO.	DIVISION	PROJ. NO.	SHEET NO.	TOTAL SHEETS
VIII	COLORADO			

REVISIONS		

TYPICAL LOG OF PIT

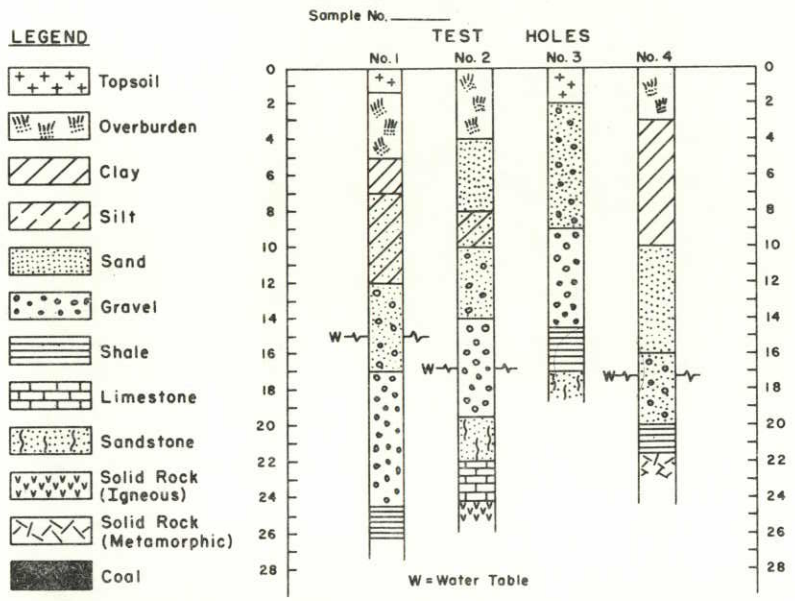

Composite materials are represented by combinations of the above symbols such as:

Sandy Clay

TYPICAL HORIZONTAL CURVE

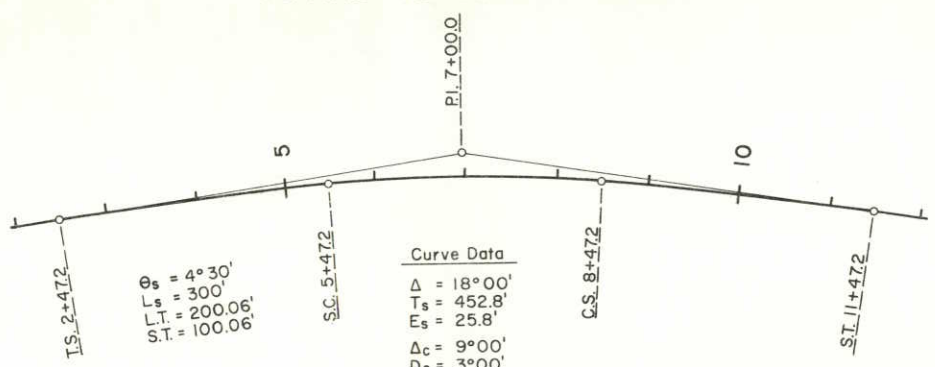

TYPICAL VERTICAL CURVE

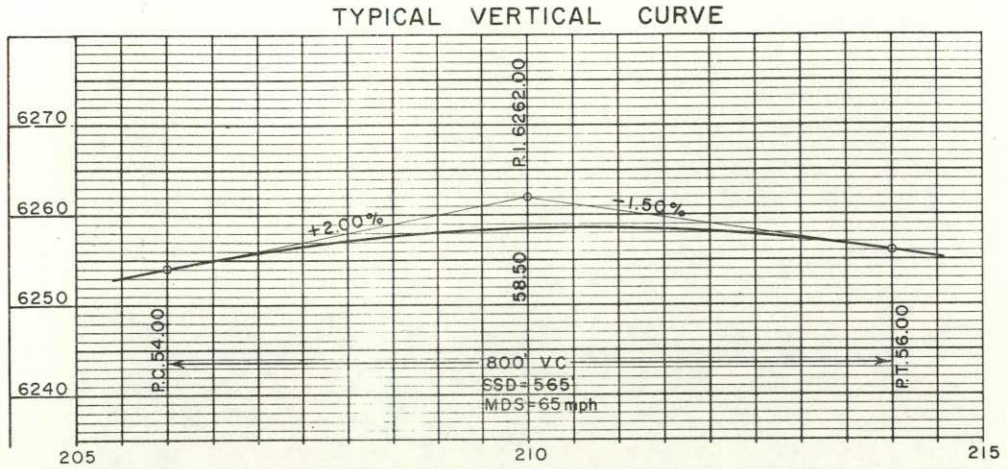

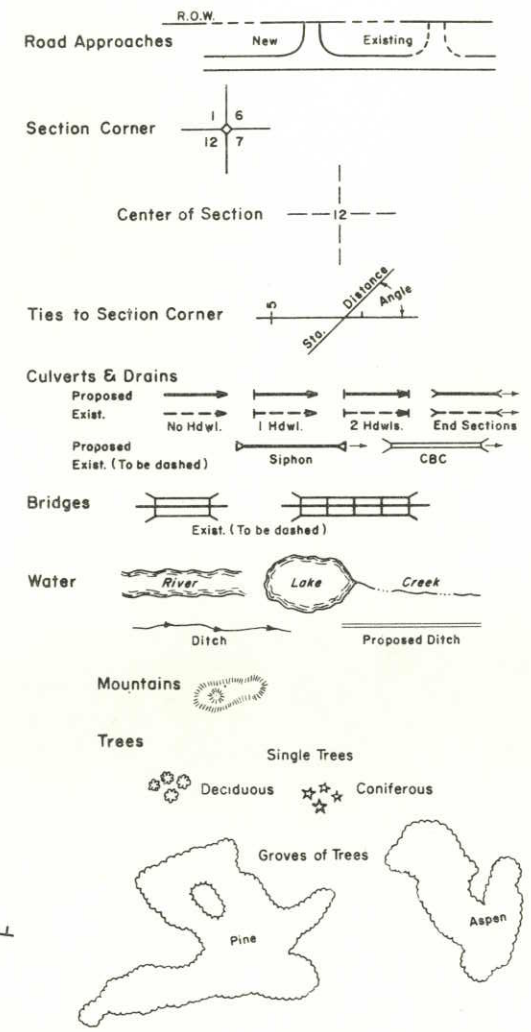

NORTH ARROWS

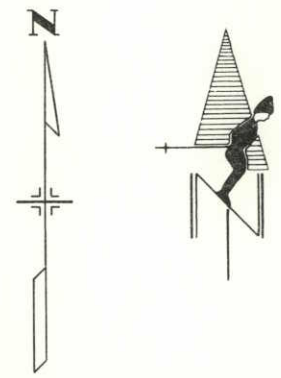

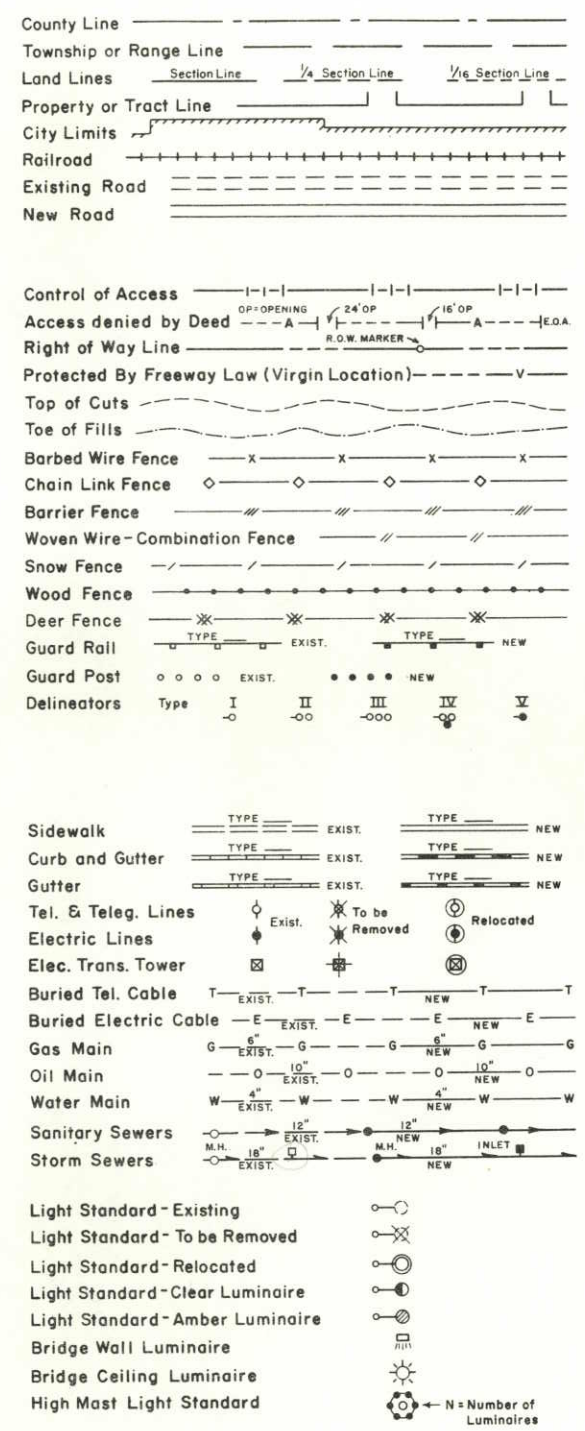

GENERAL NOTES

THESE SYMBOLS ARE INTENDED TO EXPLAIN THE VARIOUS TOPOGRAPHIC FEATURES INVOLVED ON THE ROADWAY PLAN SHEETS WHICH ARE PREPARED AT SCALES OF 1 INCH = 50 FEET OR 1 INCH = 100 FEET. NOTES ARE ADDED WHERE NECESSARY TO CLARIFY THE SYMBOL. IF THESE SYMBOLS ARE NOT APPROPRIATE FOR USE WITH OTHER SCALES, A LEGEND IS PROVIDED IN THE PLANS TO EXPLAIN THE SYMBOLS THAT ARE USED.

GUARD RAIL, CURB & GUTTER, ETC. ARE REPRESENTED BY A SYMBOL WITH TYPE GIVEN BY NOTE. SEE THE APPROPRIATE DIVISION M-STANDARD FOR EXPLANATION OF THE VARIOUS TYPES.

EXISTING BUILDINGS AND OTHER MAN MADE TOPOGRAPHICAL FEATURES NOT SYMBOLED HERE ARE SHOWN BY DASHED LINES WITH EXPLANATORY NOTES AS NECESSARY. NEW FEATURES TO BE CONSTRUCTED ARE SHOWN BY SOLID LINES.

DEPARTMENT OF HIGHWAYS
STATE OF COLORADO
DIVISION OF HIGHWAYS

STANDARD SYMBOLS

Designed by RLM Made by HPS Checked by DWD	Approved by Jon M. Cox Staff Design Engr. Date: May 11, 1973

STANDARD SIDE APPROACH ROADS, FLARING, CUT SLOPE TREATMENT & WIDENING AT BRIDGES AND AT CREST OF GRADES

STANDARD M-203-B

(JULY 1, 1965)

FED. ROAD REG. NO.	DIVISION	PROJECT NO.	SHEET NO.
9	COLO.		

REVISIONS			
(R-1)	2-6-68	Median, Cross Over	M.R.H.
(R-2)	7-30-68	Dept. Name	M.R.H.
(R-3)	4-1-69	Widening for Guard Rail	M.R.H.
(R-4)	4-27-70	Cut Slope and Note	M.R.H.
(R-5)	12-11-72	Cut Slope Tr. Dimension	M.R.H.

GENERAL DETAILS FOR FLARING OF EARTH CUTS, CUT SLOPE TREATMENT & WIDENING AT BRIDGES

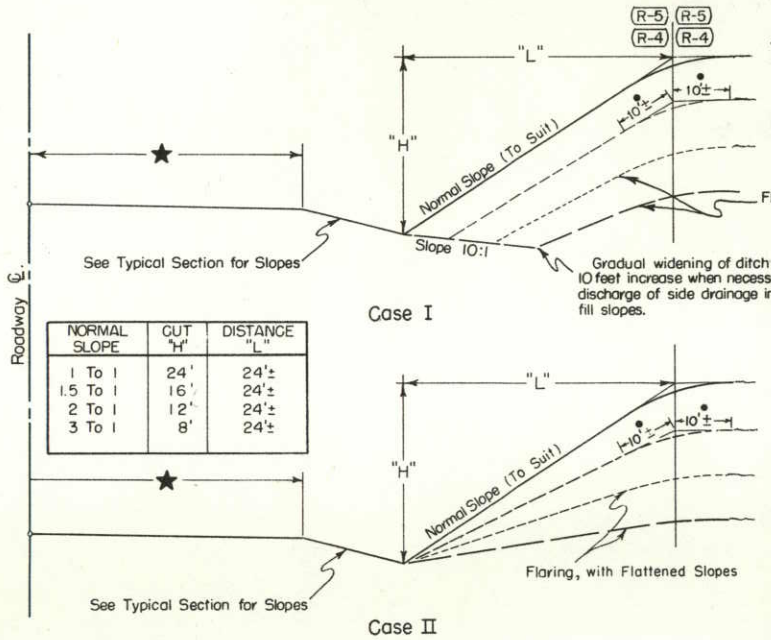

NORMAL SLOPE	CUT "H"	DISTANCE "L"
1 To 1	24'	24'±
1.5 To 1	16'	24'±
2 To 1	12'	24'±
3 To 1	8'	24'±

FLARING OF EARTH CUTS : The backslopes at ends of all earth cuts shall be flattened & where necessary the ditch shall be widened gradually to discharge side ditch drainage away from the base of adjacent fill slopes in order to avoid erosion & to improve appearance. The transition of flattened backslopes & widened ditch shall be constructed in such a manner that a uniform appearance of slope & ditch results. Backslopes shall be flared to the approximate "L" distance shown on Slope Table included with this detail. Rock cuts shall not be flared.

• CUT SLOPE TREATMENT IN EARTH CUTS: The intersection of cut slopes with the existing ground shall be rounded in earth cuts, beginning outside the slope stake and extending down the cut slope. The exact dimension will be determined by the Engineer based on the type of material encountered.

Quantities shall be included in "Unclassified Excavation".

★ WIDENING AT BRIDGE APPROACHES: Roadway embankment at bridge approaches shall be so constructed that base of surfacing at shoulder point is a minimum of 2 ft. beyond the edge of bridge deck. Where widening is necessary to achieve this result it shall take place gradually over a distance of 300 ft.

WIDENING FOR BITUMINOUS CURB (Only where Guard Rail is required); (R-3)
See appropriate M-Standard for Guard Rail.

(R-4)

PLAN OF FLARING IN EARTH CUTS

TYPICAL PLANS FOR SIDE APPROACH ROADS AND EMERGENCY MEDIAN CROSS OVERS

(R-1)

Where practical Side Drains are to be placed in line with the roadway ditches.

50' Radii to be used on all intersecting roads except private approaches. Radii may be varied to suit field conditions.

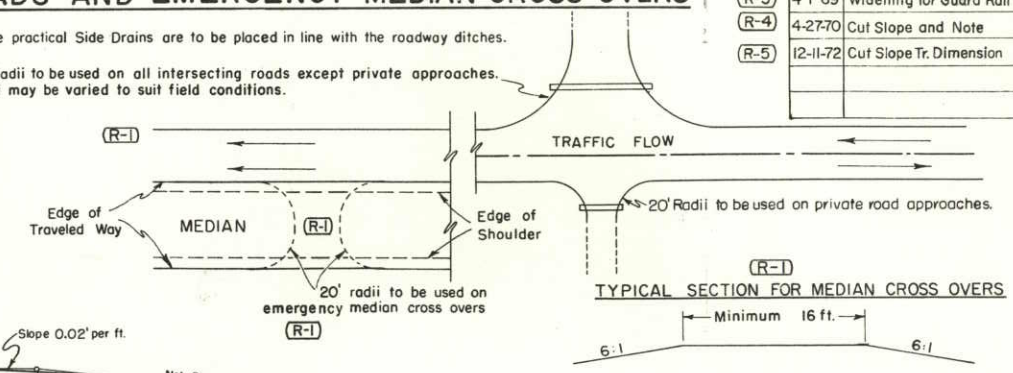

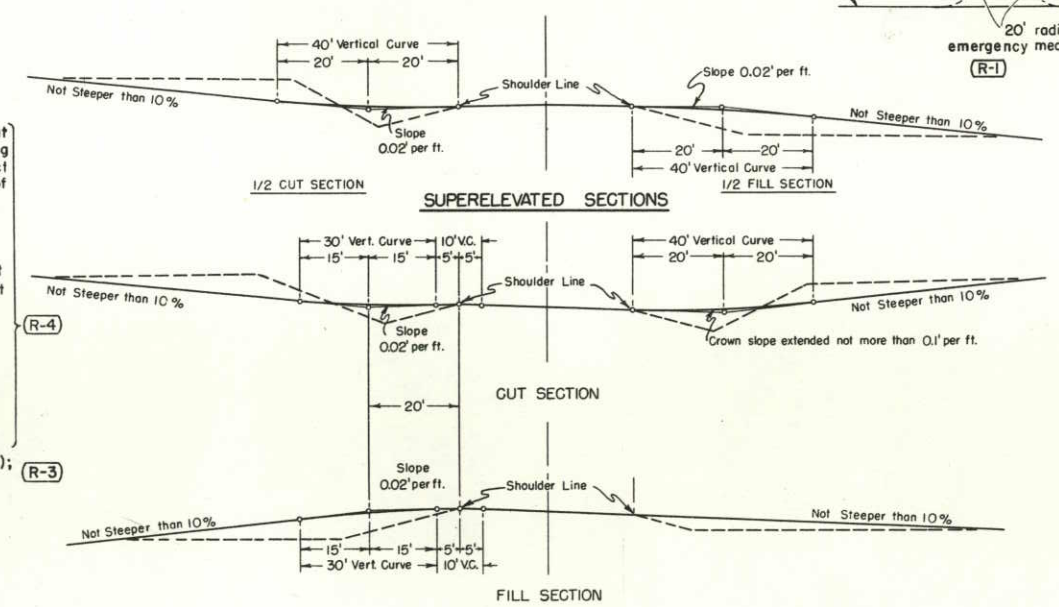

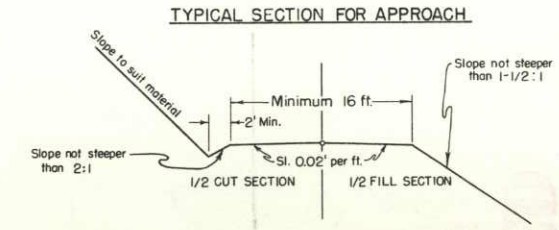

NOTE:
Road Approaches shall conform to the above details unless otherwise indicated on plans. The width of the crowned section shall not be less than the width of the crowned section of the existing approach road and the new construction shall not be less than 16 feet in width.

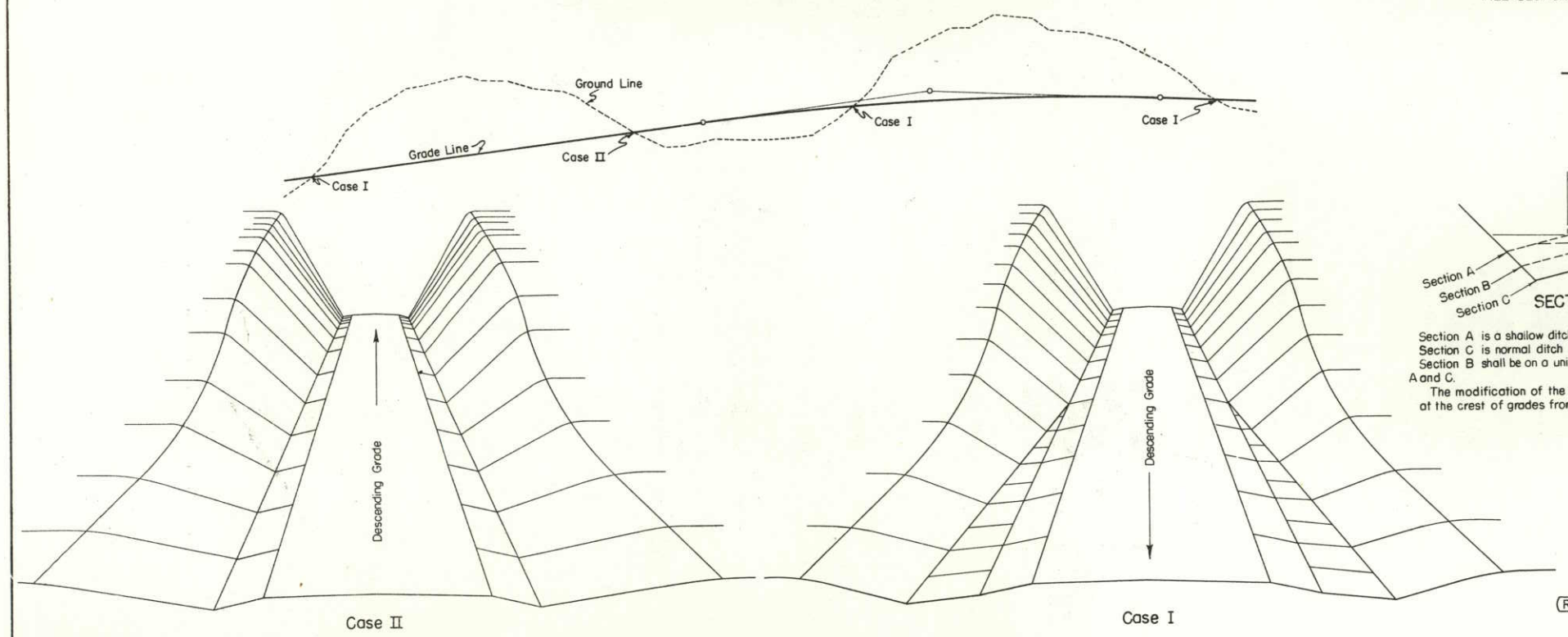

DETAILS FOR DITCH & WIDENED SHOULDERS AT CREST OF GRADES

(TO BE USED ONLY WHERE SIGHT DISTANCE AT CREST OF GRADE IS 600 FT. OR LESS)

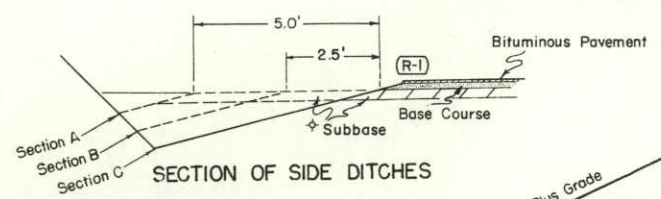

SECTION OF SIDE DITCHES

Section A is a shallow ditch section.
Section C is normal ditch section.
Section B shall be on a uniform transition between Sections A and C.
The modification of the ditch indicated shall be used only at the crest of grades from which drainage breaks both ways.

Formula for finding the Crest of Grade

$$d = \frac{\text{Plus Grade}}{\text{Algebraic Diff.}} \times L$$

NOTE
Where section is in embankment at crest of grades, the shoulder shall be widened an amount equivalent to that used on ditch sections, thus providing a symmetrical section at all crests.

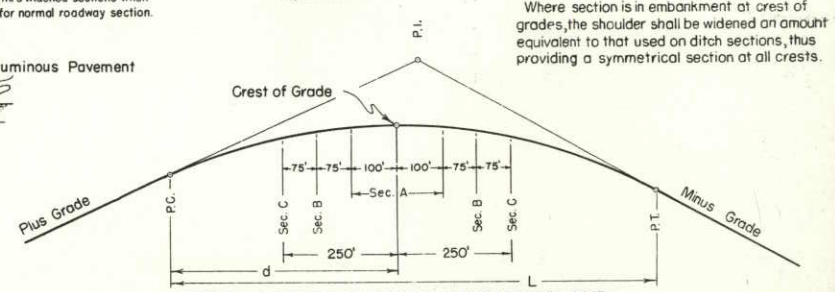

PROFILE VIEW SHOWING DISTANCES AND RELATIVE POSITIONS OF DITCH-TREATMENT SECTIONS

GENERAL NOTES

(R-2)

All work shall be done in accordance with the Standard Specifications applicable to the Project.

All side approach roads to the Project shall be Gravel Surfaced with a 4 inch thickness of Aggregate Base Course extending approximately to the Right of Way Line. Estimated tonnage and class of material required for this operation are shown in the Aggregate Base Course Plan.

The maximum grades shown are to be the limiting grades for all road approaches. Modifications of grades will be permitted where adherence to the grades as shown would cause damage to property or create other unsatisfactory conditions. Grades flatter than the maximum shown are to be used wherever feasible. (R-4)

DEPARTMENT OF HIGHWAYS
STATE OF COLORADO
DIVISION OF HIGHWAYS

APPROACH ROADS, FLARING, CUT SLOPE TREATMENT, BRIDGE & CREST WIDENING

Designed by A.Z.	Approved by J.E. Warn
Made by S.J.M. & A.B.H.	Staff Design Engr.
Checked by C.R.S.	Date: July 1, 1965.

STANDARD TYPES of DITCHES and CONSTRUCTION METHODS

STANDARD M-203-C

(JULY 1, 1965)

FED. ROAD REG. NO.	DIVISION	PROJECT NO.	SHEET NO.
9	COLO.		

DETAILS for CONTOUR INTERCEPTING DITCHES

Typical Section for Contour Intercepting Ditches

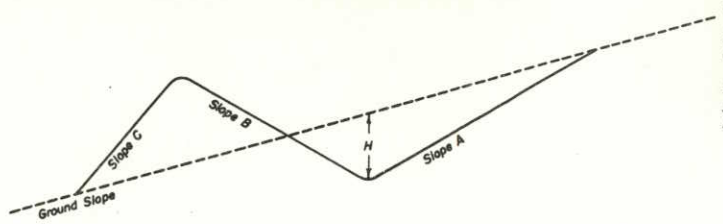

PURPOSE & USE OF THE TABLE

The primary purpose of the information for Contour and Intercepting Ditches shown on this sheet is to serve as a guide in construction and to readily arrive at yardages of excavation involved.

Foremost consideration in constructing these ditches is given first to the natural ground line slope confronted in construction, thence to the other values shown on the Typical Section.

By properly arriving at the combination of values shown on the Typical Section and in the Table for a specified condition, the number of cubic yards of excavation per 100 lin. ft. of ditch may be read under the appropriate column for this item.

Typical Construction Layouts

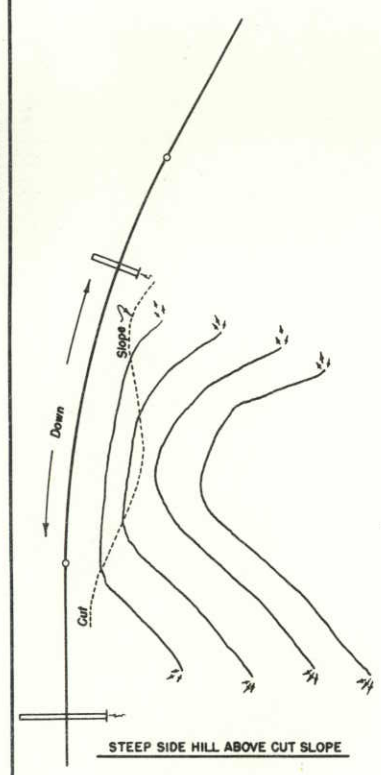

STEEP SIDE HILL ABOVE CUT SLOPE

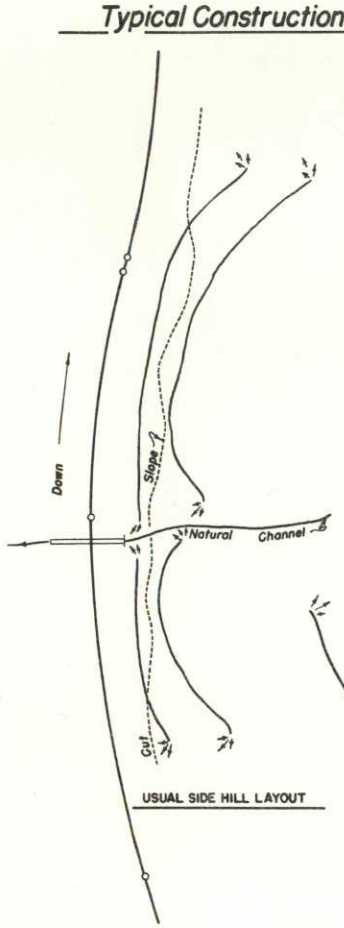

USUAL SIDE HILL LAYOUT

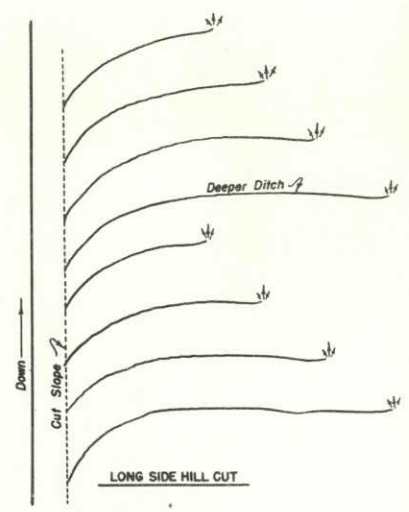

LONG SIDE HILL CUT

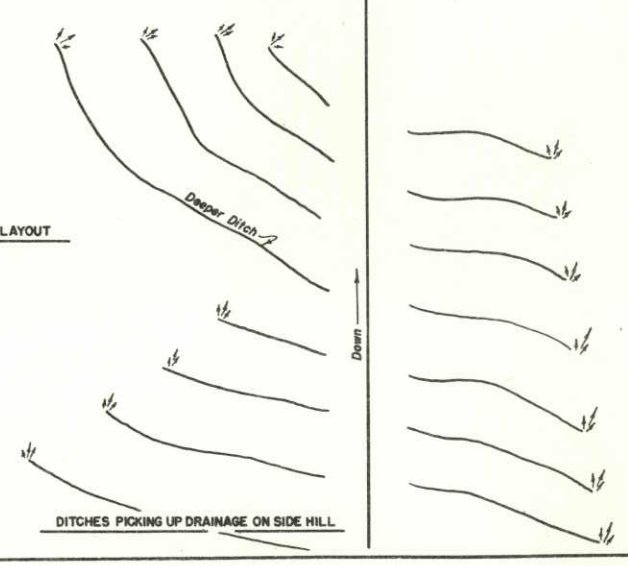

DITCHES PICKING UP DRAINAGE ON SIDE HILL

Scale of Sketches in Feet

100 0 100 200 300 400

Table of Slopes and Yardages

SLOPES ▲ Ground	A	B	C	H	Cubic Yards per 100 lin. ft. of Ditch
5:1 Or Flatter	2:1	4:1	2:1	15"	16
				18"	23
				21"	32
		3:1		15"	15
				18"	22
				21"	30
		2:1		15"	14
				18"	20
				21"	27
		1-1/2:1		15"	13
				18"	19
				21"	25
	1-1/2:1	4:1	1-1/2:1	15"	12
				18"	18
				21"	25
		3:1		15"	12
				18"	17
				21"	23
		2:1		15"	10
				18"	15
				21"	20
		1-1/2:1		15"	10
				18"	14
				21"	19
4:1	2:1	4:1	2:1	15"	17
				18"	25
				21"	34
		3:1		15"	17
				18"	24
				21"	32
		2:1		15"	15
				18"	22
				21"	30
		1-1/2:1		15"	15
				18"	21
				21"	29
	1-1/2:1	4:1	1-1/2:1	15"	13
				18"	18
				21"	25
		3:1		15"	12
				18"	17
				21"	23
		2:1		15"	11
				18"	16
				21"	21
		1-1/2:1		15"	10
				18"	14
				21"	20
3:1	2:1	3:1	2:1	15"	22
				18"	31
				21"	43
		2:1		15"	21
				18"	30
				21"	41
		1-1/2:1		15"	20
				18"	29
				21"	40
	1-1/2:1	3:1	1-1/2:1	15"	13
				18"	19
				21"	26
		2:1		15"	12
				18"	17
				21"	24
		1-1/2:1		15"	12
				18"	17
				21"	23
2:1	1-1/2:1	2:1	1-1/2:1	15"	20
				18"	29
				21"	40
		1-1/2:1		15"	20
				18"	28
				21"	39
	1:1	2:1	1:1	15"	9
				18"	13
				21"	17
		1-1/2:1		15"	8
				18"	12
				21"	16
1-1/2:1	1:1	1-1/2:1	1:1	15"	11
				18"	16
				21"	21

▲ *Slopes are approximate and may be varied to suit conditions encountered during construction.*

TYPICAL SECTIONS for DRAINAGE, IRRIGATION DITCHES and CHANNEL CHANGES

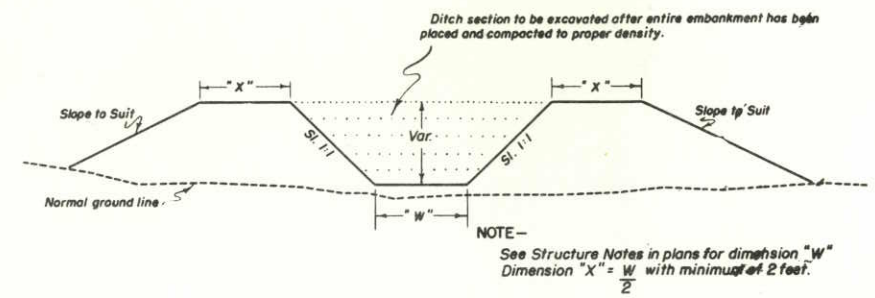

NOTE –
See Structure Notes in plans for dimension "W"
Dimension "X" = $\frac{W}{2}$ with minimum of 2 feet.

For Embankment Sections

(Generally for use in Irrigation Ditches & Channel Changes)

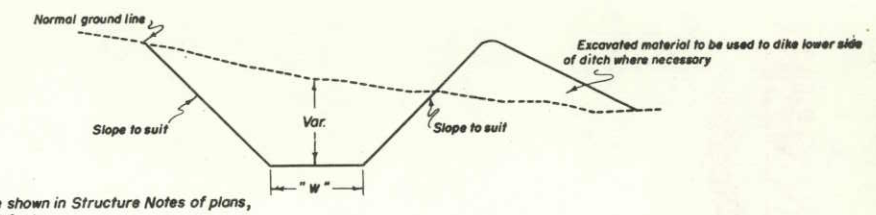

NOTE –
Unless otherwise shown in Structure Notes of plans, dimension "W" = 1 foot.

For Cut Sections

REVISIONS		
(R-1) 7-23-68	Dept. Name	M.R.H.

GENERAL NOTES

All work shall be done in accordance with the Standard Specifications applicable to the Project.

All ditches are to be constructed to lines and grades as staked by the Engineer using the ditch section shown on plans or as ordered by the Engineer.

CONTOUR INTERCEPTING DITCHES: *Ditches are to be laid out along the ground contour on a grade of not over 1% (Type of soil shall govern the grade).*

Ends of ditches are to be lined up so that concentration of flow from a higher contour ditch into one of lower contour is, as far as possible avoided. The use of a deeper ditch is recommended where this condition is encountered.

The following horizontal spacing of ditches is recommended:

4% to 6%	Approximately	70' Centers
8% to 10%	Approximately	60' Centers
20% to 4:1 Slope	Approximately	55' Centers
30% to 1-1/2:1 Slope	Approximately	50' Centers

(R-1)

Where ditch checks are required the intervening ditch between one set of ditch checks shall not exceed a grade of 1.0%. Details of checks will be shown on plans when required.

DEPARTMENT OF HIGHWAYS
STATE OF COLORADO
DIVISION OF HIGHWAYS

DITCH TYPES

Designed by C.G.M.
Made by C.G.M.
Checked by

Approved by [signature]
Staff Design Engr.
Date: July 1, 1965

STANDARD M-203-SC

(OCTOBER 22, 1971)

FEDERAL ROAD REGION NO.	DIVISION	PROJECT NO.	SHEET NO.
9	COLORADO		

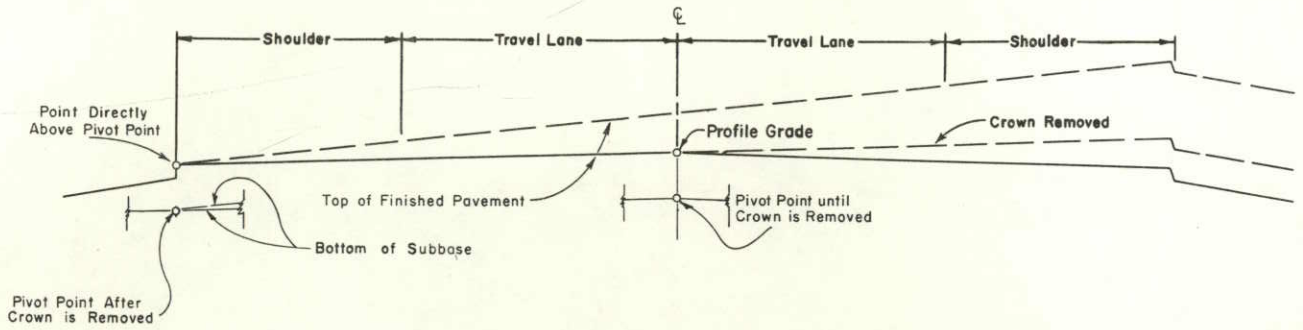

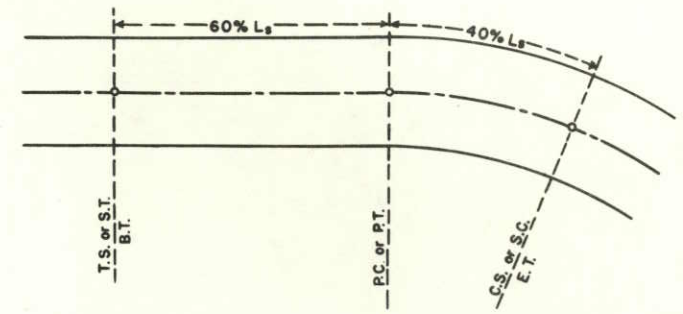

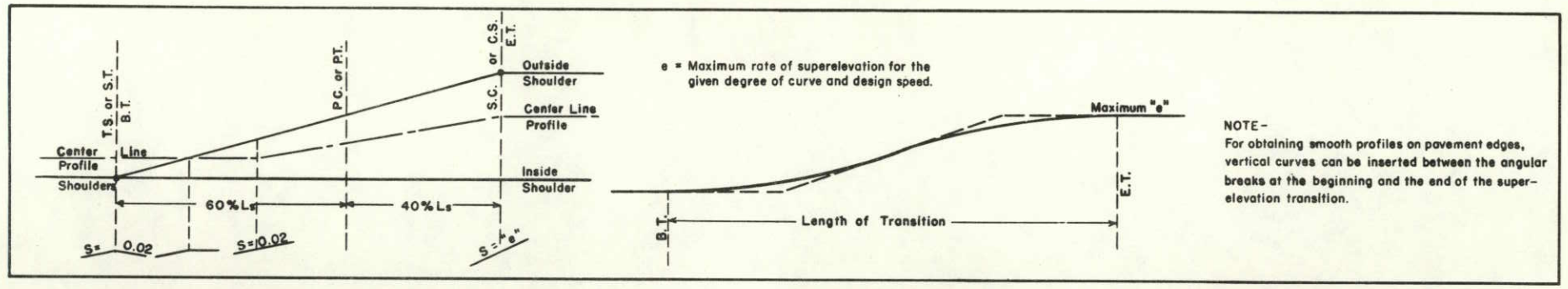

NOTE-
For obtaining smooth profiles on pavement edges, vertical curves can be inserted between the angular breaks at the beginning and the end of the super-elevation transition.

REVISIONS			
R-1	3-24-75	Revise "L".	M.R.H.

SUPERELEVATION RATES

VALUES FOR DESIGN ELEMENTS RELATED TO DESIGN SPEED AND HORIZONTAL CURVATURE

Use in Mountainous Areas and Areas where Icing Conditions Frequently Exist

D	R	V=30 MPH		V=40 MPH		V=50 MPH		V=60 MPH		V=65 MPH		V=70 MPH		V=75 MPH		V=80 MPH	
		e	L-FEET	e	L-FEET	e	L-FEET	e	L-FEET	e	L-FEET	e	L-FEET	e	L-FEET	e	L-FEET
0° 15′	22918′	NC	0	NC	0	NC	0	NC	0	NC	0	NC	0	NC	0	RC	240
0° 30′	11459′	NC	0	NC	0	NC	0	RC	175	RC	190	RC	200	.022	220	.024	240
0° 45′	7639′	NC	0	NC	0	RC	150	.022	175	.025	190	.029	200	.032	220	.036	240
1° 00′	5730′	NC	0	RC	125	.021	150	.029	175	.033	190	.038	200	.043	220	.047	240
1° 30′	3820′	RC	100	.021	125	.030	150	.040	175	.046	190	.053	200	.060	220	.065	240
2° 00′	2865′	RC	100	.027	125	.038	150	.051	175	.057	190	.065	200	.072	230	.076	250
2° 30′	2292′	.021	100	.033	125	.046	150	.060	175	.066	190	.073	220	.078	250	.080	260
3° 00′	1910′	.025	100	.038	125	.053	150	.067	180	.073	210	.078	230	.080	250	.080	260
3° 30′	1637′	.028	100	.043	125	.058	150	.073	200	.077	220	.080	240	.080	250	D max = 2.5°	
4° 00′	1432′	.032	100	.047	125	.063	150	.077	210	.079	230	.080	240	D max = 3.0°			
5° 00′	1146′	.038	100	.055	125	.071	170	.080	220	.080	230	D max = 3.5°					
6° 00′	955′	.043	100	.061	130	.077	180	.080	220	D max = 4.5°							
7° 00′	819′	.048	100	.067	140	.079	190	D max = 5.0°									
8° 00′	716′	.052	100	.071	150	.080	190										
9° 00′	637′	.056	100	.075	160	D max = 7.5°											
10° 00′	573′	.059	110	.077	160												
11° 00′	521′	.063	110	.079	170												
12° 00′	477′	.066	120	.080	170												
13° 00′	441′	.068	120	.080	170												
14° 00′	409′	.070	130	D max = 12.5°													
16° 00′	358′	.074	130														
18° 00′	318′	.077	140														
20° 00′	286′	.079	140														
22° 00′	260	.080	140														
		.080	140														
		D max = 23.0°															

$e_{max} = 0.08$

Use in Rolling Areas and Areas where Icing Conditions Occasionally Exist

D	R	V=30 MPH		V=40 MPH		V=50 MPH		V=60 MPH		V=65 MPH		V=70 MPH		V=75 MPH		V=80 MPH	
		e	L-FEET	e	L-FEET	e	L-FEET	e	L-FEET	e	L-FEET	e	L-FEET	e	L-FEET	e	L-FEET
0° 15′	22918′	NC	0	NC	0	NC	0	NC	0	NC	0	NC	0	NC	0	RC	240
0° 30′	11459′	NC	0	NC	0	NC	0	RC	175	RC	190	RC	200	.022	220	.024	240
0° 45′	7639′	NC	0	NC	0	RC	150	.024	175	.027	190	.029	200	.033	220	.036	240
1° 00′	5730′	NC	0	RC	125	.023	150	.032	175	.035	190	.039	200	.044	220	.048	240
1° 30′	3820′	RC	100	.021	125	.033	150	.046	175	.052	190	.058	200	.065	220	.071	240
2° 00′	2865′	RC	100	.028	125	.042	150	.058	175	.066	190	.074	220	.082	260	.089	290
2° 30′	2292′	.021	100	.034	125	.051	150	.069	190	.077	220	.086	260	.094	300	.099	330
3° 00′	1910′	.025	100	.040	125	.059	150	.079	210	.087	250	.094	280	.100	320	.100	330
3° 30′	1637′	.029	100	.046	125	.067	160	.087	230	.093	270	.099	300	.100	320	.100	330
4° 00′	1432′	.033	100	.051	125	.073	180	.093	250	.098	280	.100	300	D max=3.0°		D max=3.0°	
5° 00′	1146′	.040	100	.061	130	.084	200	.099	270	.100	290	.100	300				
6° 00′	955′	.046	100	.070	150	.092	220	.100	270	D max=4.5°		D max=4.0°					
7° 00′	819′	.053	100	.077	160	.098	240	D max=5.5°									
8° 00′	716′	.059	110	.084	180	.100	240										
9° 00′	637′	.064	120	.089	190	.100	240										
10° 00′	573′	.068	120	.093	200	D max=8.5°											
11° 00′	521′	.073	130	.097	200												
12° 00′	477′	.077	140	.099	210												
13° 00′	441′	.080	140	.100	210												
14° 00′	409′	.083	150	.100	210												
16° 00′	358′	.089	160	D max=13.5°													
18° 00′	318′	.093	170														
20° 00′	286′	.097	170														
22° 00′	260′	.099	180														
24° 00′	239′	.100	180														
		.100	180														
		D max=25.0°															

$e_{max} = 0.10$

Use in Plains Areas and Areas where Icing Conditions Seldom Exist or Where Roadways are Well Sanded during Icing Conditions

D	R	V=30 MPH		V=40 MPH		V=50 MPH		V=60 MPH		V=65 MPH		V=70 MPH		V=75 MPH		V=80 MPH	
		e	L-FEET	e	L-FEET	e	L-FEET	e	L-FEET	e	L-FEET	e	L-FEET	e	L-FEET	e	L-FEET
0° 15′	22918′	NC	0	NC	0	NC	0	NC	0	NC	0	NC	0	NC	0	RC	240
0° 30′	11459′	NC	0	NC	0	NC	0	RC	175	RC	190	RC	200	.022	220	.024	240
0° 45′	7639′	NC	0	NC	0	RC	150	.024	175	.026	190	.029	200	.033	220	.036	240
1° 00′	5730′	NC	0	RC	125	.023	150	.031	175	.035	190	.039	200	.043	220	.048	240
1° 30′	3820′	RC	100	.022	125	.034	150	.047	175	.053	190	.059	200	.065	220	.072	240
2° 00′	2865′	RC	100	.030	125	.045	150	.062	175	.070	200	.078	230	.087	280	.095	310
2° 30′	2292′	.022	100	.037	125	.055	150	.076	210	.085	240	.095	290	.105	330	.113	370
3° 00′	1910′	.026	100	.044	125	.065	160	.088	240	.097	240	.108	320	.117	370	.120	400
3° 30′	1637′	.030	100	.050	125	.074	180	.098	260	.107	310	.116	350	.120	380	.120	400
4° 00′	1432′	.034	100	.057	125	.082	200	.106	290	.114	330	.120	360	.120	380	D max=3.0°	
5° 00′	1146′	.042	100	.068	140	.096	230	.117	320	.120	350	.120	360	D max=3.5°			
6° 00′	955′	.049	100	.079	170	.107	260	.120	320	.120	350	D max=4.0°					
7° 00′	819′	.055	100	.088	180	.114	270	.120	320	D max=5.0°							
8° 00′	716′	.062	110	.096	200	.119	290	D max=6.0°									
9° 00′	637′	.068	120	.103	220	.120	290										
10° 00′	573′	.074	130	.108	230	.120	290										
11° 00′	521′	.079	140	.113	240	D max=9.0°											
12° 00′	477′	.084	150	.116	240												
13° 00′	441′	.089	160	.119	250												
14° 00′	409′	.093	170	.120	250												
16° 00′	358′	.101	180	.120	250												
18° 00′	318′	.108	190	D max=14.5°													
20° 00′	286′	.113	200														
22° 00′	260′	.117	210														
24° 00′	220′	.120	220														
		.120	220														
		D max=26.5°															

$e_{max} = 0.12$

D - DEGREE OF CURVE
R - RADIUS OF CURVATURE
V - ASSUMED DESIGN SPEED
e - SUPERELEVATION RATE IN FEET (PER FOOT OF WIDTH)

(R-1) L - MINIMUM LENGTH OF RUNOFF OR SPIRAL CURVE
NC - NORMAL CROWN SECTION
RC - REMOVE ADVERSE CROWN, SUPERELEVATE AT NORMAL CROWN SLOPE

SPIRALS DESIRABLE BUT NOT AS ESSENTIAL ABOVE THE UPPERMOST HEAVY LINE. LENGTHS ROUNDED IN MULTIPLES OF 25 OR 50 FEET PERMIT SIMPLER CALCULATIONS.

DEPARTMENT OF HIGHWAYS
STATE OF COLORADO
DIVISION OF HIGHWAYS

SUPERELEVATION OF CURVES CROWNED HIGHWAYS

Designed by JWK Made by RLM Checked by DLV	Approved by Lyon M. Coy Staff Design Engr. Date: October 22, 1971

STANDARD M-203-SD

(OCTOBER 22, 1971)

FEDERAL ROAD REGION NO.	DIVISION	PROJECT NO.	SHEET NO.
9	COLORADO		

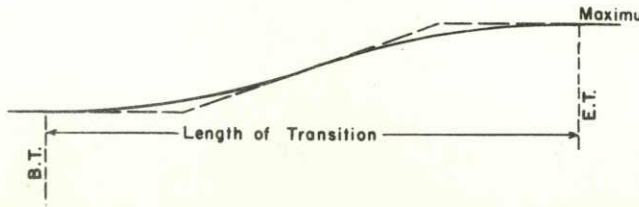

NOTE-
For obtaining smooth profiles on pavement edges, vertical curves can be inserted between the angular breaks at the beginning and the end of the superelevation transition.

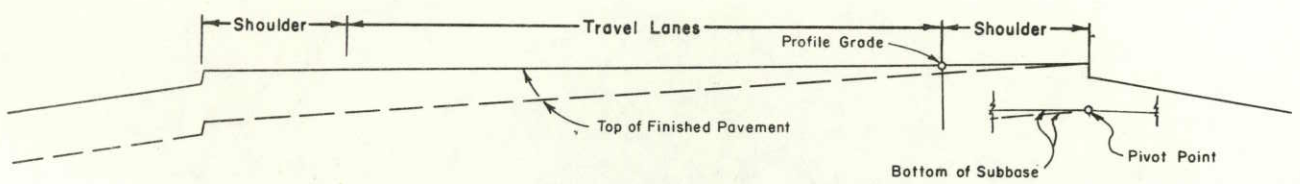

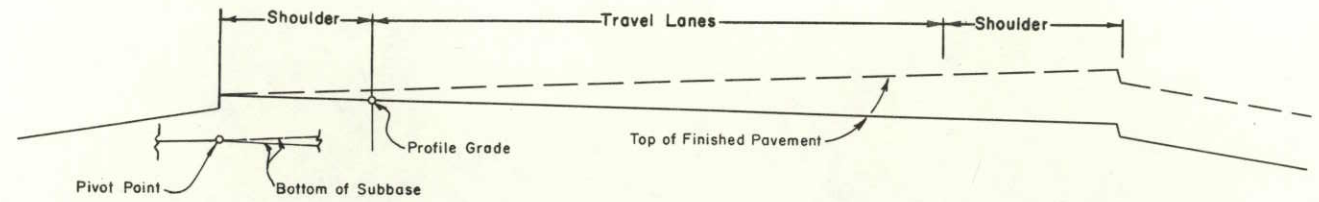

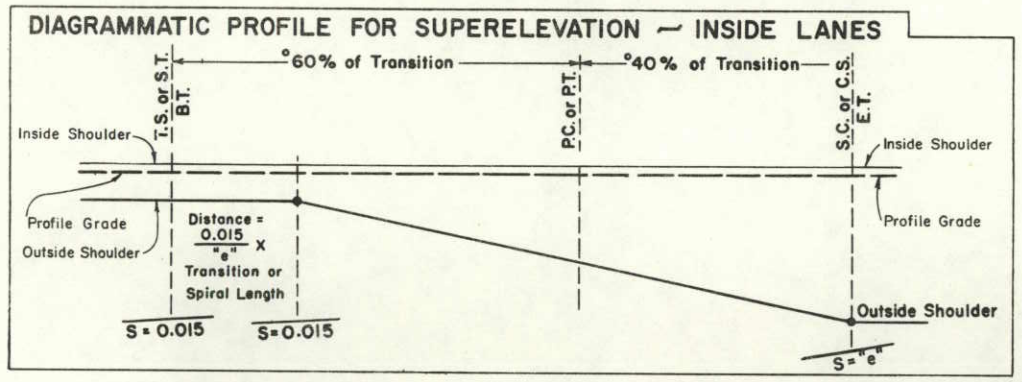

° When Curve is Not Spiralled

e = Maximum rate of superelevation for the given degree of curve and design speed.

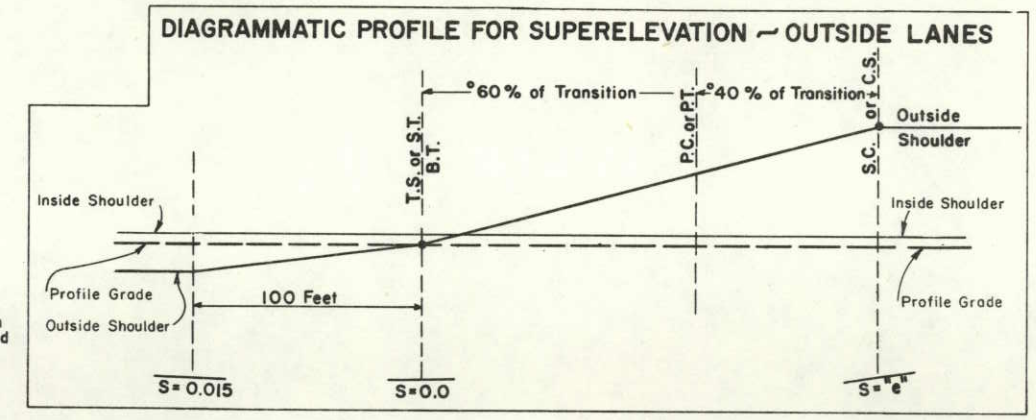

REVISIONS		
(R-1) 3-24-75	Revise "L"	M.R.H.

SUPERELEVATION RATES

VALUES FOR DESIGN ELEMENTS RELATED TO DESIGN SPEED AND HORIZONTAL CURVATURE

Use in Mountainous Areas and Areas where Icing Conditions Frequently Exist

D	R	V = 30 MPH		V = 40 MPH		V = 50 MPH		V = 60 MPH		V = 65 MPH		V = 70 MPH		V = 75 MPH		V = 80 MPH	
		e	L-FEET	e	L-FEET	e	L-FEET	e	L-FEET	e	L-FEET	e	L-FEET	e	L-FEET	e	L-FEET
0° 15′	22918′	NC	0	NC	0	NC	0	NC	0	NC	0	NC	0	NC	0	RC	240
0° 30′	11459′	NC	0	NC	0	NC	0	RC	175	RC	190	RC	200	.022	220	.024	240
0° 45′	7639′	NC	0	NC	0	RC	150	.022	175	.025	190	.029	200	.032	220	.036	240
1° 00′	5730′	NC	0	RC	125	.021	150	.029	175	.033	190	.038	200	.043	220	.047	240
1° 30′	3820′	RC	100	.021	125	.030	150	.040	175	.046	200	.053	240	.060	290	.065	320
2° 00′	2865′	RC	100	.027	125	.038	150	.051	210	.057	250	.065	290	.072	340	.076	380
2° 30′	2292′	.021	100	.033	125	.046	170	.060	240	.066	290	.073	330	.078	370	.080	400
3° 00′	1910′	.025	100	.038	125	.053	190	.067	270	.073	320	.078	350	.080	380	.080	400
3° 30′	1637′	.028	100	.043	140	.058	210	.073	300	.077	330	.080	360	.080	380	D max=2.5°	
4° 00′	1432′	.032	100	.047	150	.063	230	.077	310	.079	340	.080	360	D max=3.0°			
5° 00′	1146′	.038	100	.055	170	.071	260	.080	320	.080	350	D max=3.5°					
6° 00′	955′	.043	120	.061	190	.077	280	.080	320	D max=4.5°							
7° 00′	819′	.048	130	.067	210	.079	280	D max=5.0°									
8° 00′	716′	.052	140	.071	220	.080	290										
9° 00′	637′	.056	150	.075	240	D max =7.5°											
10° 00′	573′	.059	160	.077	240												
11° 00′	521′	.063	170	.079	250												
12° 00′	477′	.066	180	.080	250												
13° 00′	441′	.068	180	.080	250												
14° 00′	409′	.070	190	D max=12.5°													
16° 00′	358′	.074	200														
18° 00′	318′	.077	210														
20° 00′	286′	.079	210														
22° 00′	260′	.080	220														
		.080	220														
		D max=23.0°															

$e_{max} = 0.08$

Use in Rolling Areas and Areas where Icing Conditions Occasionally Exist

D	R	V = 30 MPH		V = 40 MPH		V = 50 MPH		V = 60 MPH		V = 65 MPH		V = 70 MPH		V = 75 MPH		V = 80 MPH	
		e	L-FEET	e	L-FEET	e	L-FEET	e	L-FEET	e	L-FEET	e	L-FEET	e	L-FEET	e	L-FEET
0° 15′	22918′	NC	0	NC	0	NC	0	NC	0	NC	0	NC	0	NC	0	RC	240
0° 30′	11459′	NC	0	NC	0	NC	0	RC	175	RC	190	RC	200	.022	220	.024	240
0° 45′	7639′	NC	0	NC	0	RC	150	.024	175	.027	190	.029	200	.033	220	.036	240
1° 00′	5730′	NC	0	RC	125	.023	150	.032	175	.035	190	.039	200	.044	220	.048	240
1° 30′	3820′	RC	100	.021	125	.033	150	.046	190	.052	220	.058	260	.065	310	.071	350
2° 00′	2865′	RC	100	.028	125	.042	150	.058	230	.066	290	.074	330	.082	390	.089	440
2° 30′	2292′	.021	100	.034	125	.051	180	.069	280	.077	330	.086	390	.094	450	.099	490
3° 00′	1910′	.025	100	.040	125	.059	210	.079	320	.087	380	.094	420	.100	480	.100	500
3° 30′	1637′	.029	100	.046	140	.067	240	.087	350	.093	400	.099	450	.100	480	.100	500
4° 00′	1432′	.033	100	.051	160	.073	260	.093	380	.098	420	.100	450	D max=3.0°		D max=3.0°	
5° 00′	1146′	.040	110	.061	190	.084	300	.099	400	.100	430	.100	450				
6° 00′	955′	.046	120	.070	220	.092	330	.100	410	D max=4.5°		D max=4.0°					
7° 00′	819′	.053	140	.077	240	.098	350	D max=5.5°									
8° 00′	716′	.059	160	.084	260	.100	360										
9° 00′	637′	.064	170	.089	280	.100	360										
10° 00′	573′	.068	180	.093	290	D max=8.5°											
11° 00′	521′	.073	200	.097	310												
12° 00′	477′	.077	210	.099	310												
13° 00′	441′	.080	220	.100	320												
14° 00′	409′	.083	220	.100	320												
16° 00′	358′	.089	240	D max=13.5°													
18° 00′	318′	.093	250														
20° 00′	286′	.097	260														
22° 00′	260′	.099	270														
24° 00′	239′	.100	270														
		.100	270														
		D max=25.0°															

$e_{max} = 0.10$

Use in Plains Areas and Areas where Icing Conditions Seldom Exist or Where Roadways are Well Sanded during Icing Conditions

D	R	V = 30 MPH		V = 40 MPH		V = 50 MPH		V = 60 MPH		V = 65 MPH		V = 70 MPH		V = 75 MPH		V = 80 MPH	
		e	L-FEET	e	L-FEET	e	L-FEET	e	L-FEET	e	L-FEET	e	L-FEET	e	L-FEET	e	L-FEET
0° 15′	22918′	NC	0	NC	0	NC	0	NC	0	NC	0	NC	0	NC	0	RC	240
0° 30′	11459′	NC	0	NC	0	NC	0	RC	175	RC	190	RC	200	.022	220	.024	240
0° 45′	7639′	NC	0	NC	0	RC	150	.024	175	.026	190	.029	200	.033	220	.036	240
1° 00′	5730′	NC	0	RC	125	.023	150	.031	175	.035	190	.039	200	.043	220	.048	240
1° 30′	3820′	RC	100	.022	125	.034	150	.047	190	.053	230	.059	270	.065	310	.072	360
2° 00′	2865′	RC	100	.030	125	.045	160	.062	250	.070	300	.078	350	.087	410	.095	470
2° 30′	2292′	.022	100	.037	125	.055	200	.076	310	.085	370	.095	430	.105	500	.113	560
3° 00′	1910′	.026	100	.044	140	.065	230	.088	360	.097	420	.108	490	.117	560	.120	600
3° 30′	1637′	.030	100	.050	160	.074	270	.098	400	.107	460	.116	520	.120	570	.120	600
4° 00′	1432′	.034	100	.057	180	.082	300	.106	430	.114	490	.120	540	.120	570	D max=3.0°	
5° 00′	1146′	.042	110	.068	210	.096	350	.117	470	.120	520	.120	540	D max=3.5°			
6° 00′	955′	.049	130	.079	250	.107	390	.120	490	.120	520	D max=4.0°					
7° 00′	819′	.055	150	.088	280	.114	410	.120	490	D max=5.0°							
8° 00′	716′	.062	170	.096	300	.119	430	D max=6.0°									
9° 00′	637′	.068	180	.103	320	.120	430										
10° 00′	573′	.074	200	.108	340	.120	430										
11° 00′	521′	.079	210	.113	360	D max=9.0°											
12° 00′	477′	.084	230	.116	370												
13° 00′	441′	.089	240	.119	370												
14° 00′	409′	.093	250	.120	380												
16° 00′	358′	.101	270	.120	380												
18° 00′	318′	.108	290	D max=14.5°													
20° 00′	286′	.113	310														
22° 00′	260′	.117	320														
26° 00′	220′	.120	320														
		.120	320														
		D max=26.5°															

$e_{max} = 0.12$

D - DEGREE OF CURVE
R - RADIUS OF CURVATURE
V - ASSUMED DESIGN SPEED
e - SUPERELEVATION RATE IN FEET (PER FOOT OF WIDTH)

(R-1) L - MINIMUM LENGTH OF RUNOFF OR SPIRAL CURVE
NC - NORMAL CROWN SECTION
RC - REMOVE ADVERSE CROWN, SUPERELEVATE AT NORMAL CROWN SLOPE

SPIRALS DESIRABLE BUT NOT AS ESSENTIAL ABOVE THE UPPERMOST HEAVY LINE. LENGTHS ROUNDED IN MULTIPLES OF 25 OR 50 FEET PERMIT SIMPLER CALCULATIONS.

DEPARTMENT OF HIGHWAYS
STATE OF COLORADO
DIVISION OF HIGHWAYS

SUPERELEVATION OF CURVES DIVIDED HIGHWAYS

Designed by JWK Made by RLM Checked by DLV	Approved by John M. Cox Staff Design Engr. Date: October 22, 1971

DIVISION OF HIGHWAYS, STATE OF COLORADO
D. O. H. FORM NO. 126
Rev. October, 1972

STANDARD M-206-AB

(MARCH 4, 1976)
(SHEET 1 OF 3)

FEDERAL ROAD REGION NO.	DIVISION	PROJ. NO.	SHEET NO.	TOTAL SHEETS
VIII	COLORADO			

REVISIONS			
R-1	3-26-76	Gen. Note, footing in rock.	T.A.L.
R-2	4-16-76	Limit of Str. Excav. in Box Culv. detail.	T.A.L.

SIPHON OR CONDUIT IN TRENCH

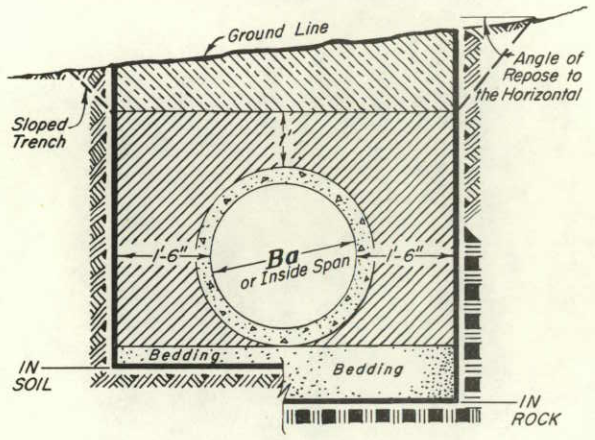

CIRCULAR CONDUIT

NOTE: For additional Culvert installation details and for Backfill quantities, see M Standards & Design Aids for metal, concrete, structural plate culverts or pipe sewer.

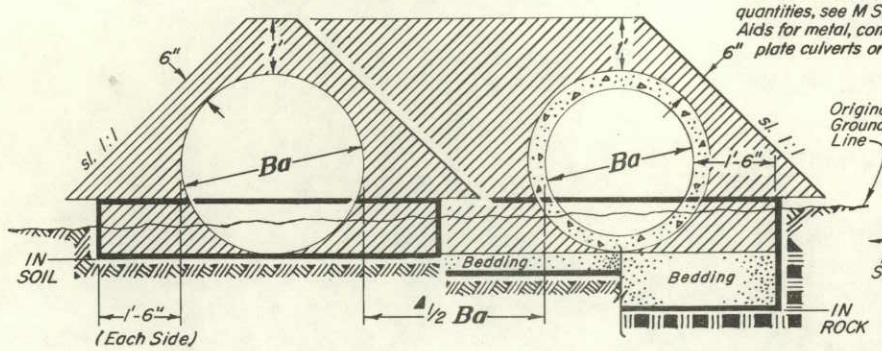

ELLIPTICAL OR ARCH CONDUIT

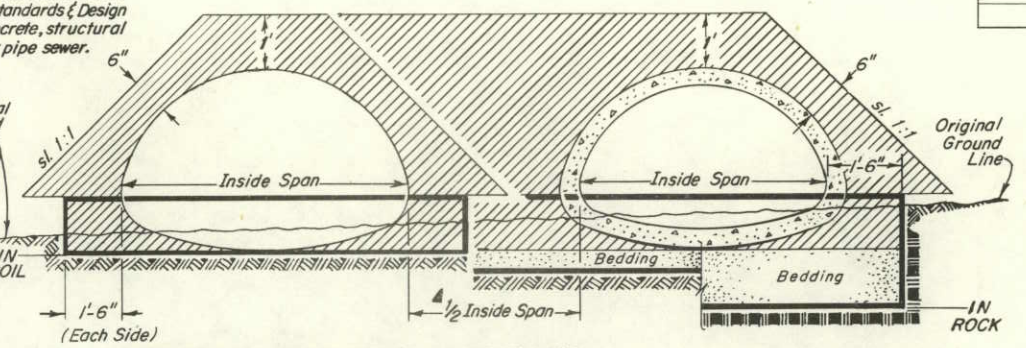

LEGEND

- STRUCTURE EXCAVATION
- STRUCTURE BACKFILL
- EARTH
- ROCK
- EMBANKMENT MATERIAL
- CONCRETE
- Ba — INSIDE DIAMETER

CAST IN PLACE CONDUIT

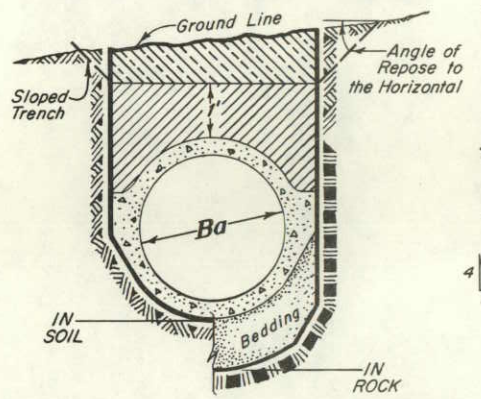

TRENCH FOR PIPE UNDERDRAIN

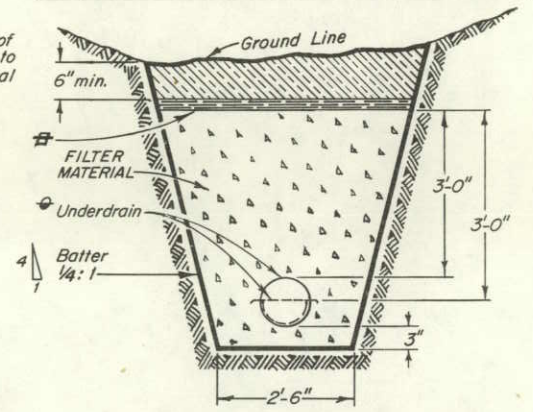

▲ When 2 or more conduits are laid side by side they shall be placed so that the adjacent pipes will be ½ Inside Diameter or ½ Inside Span or 3 feet apart (including wall thickness) whichever is less. Minimum spacing shall be not less than one foot between outside walls of pipe or End Section.

CONDUIT WITH END SECTIONS

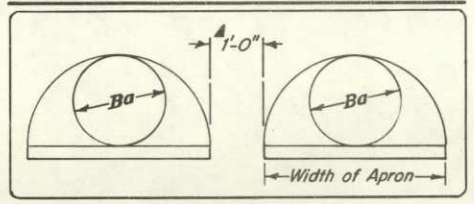

HEADWALL

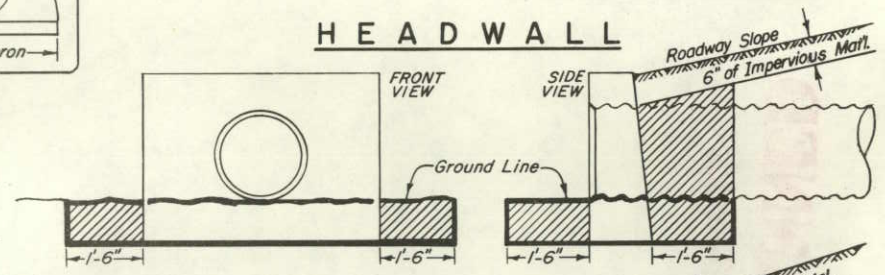

END OF CULVERT

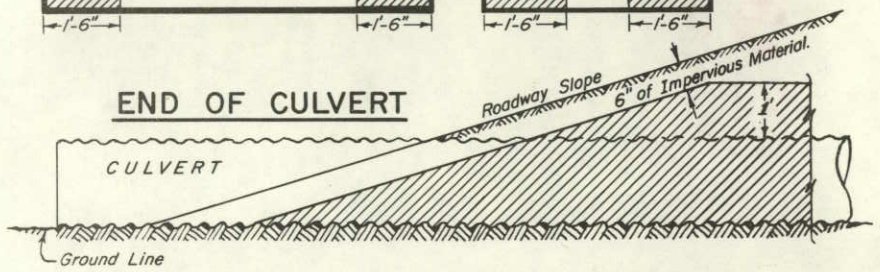

RETAINING WALL IN CUT & IN PARTIAL CUT

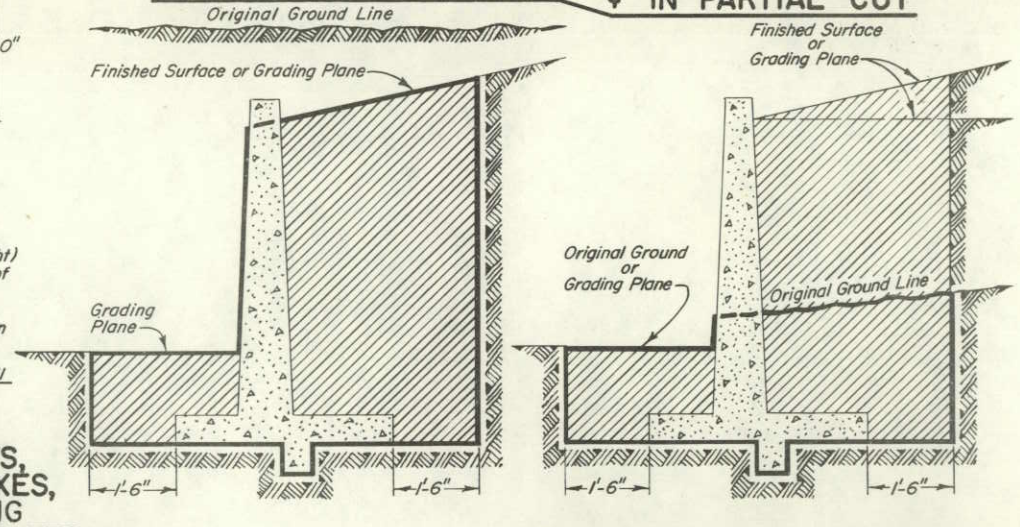

CONCRETE BOX CULVERT

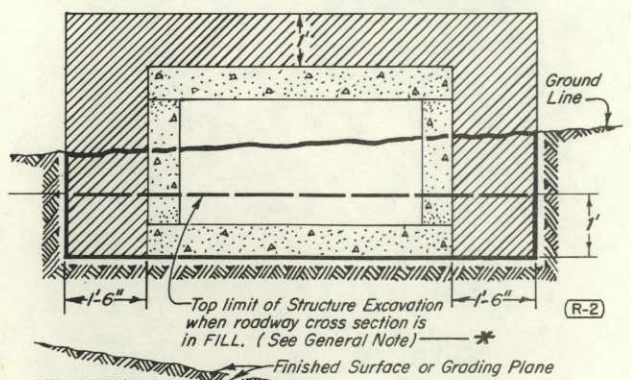

WINGWALL

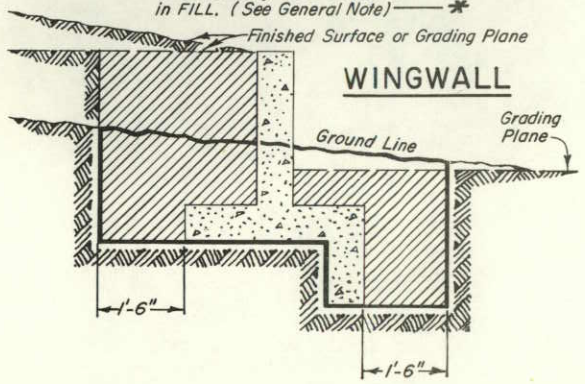

DROP INLETS, DIVISION BOXES, INTERCEPTING HEADWALLS, ETC.

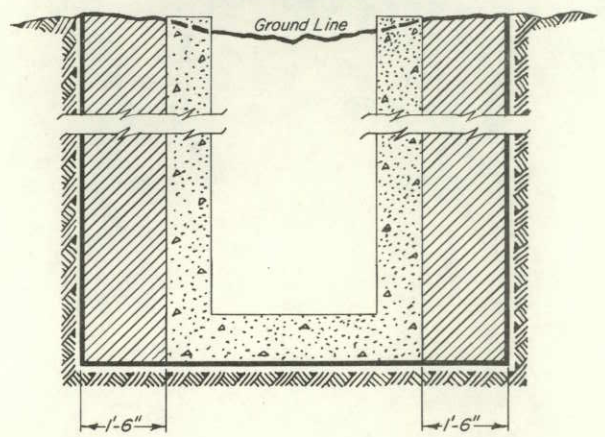

RETAINING WALL IN FILL

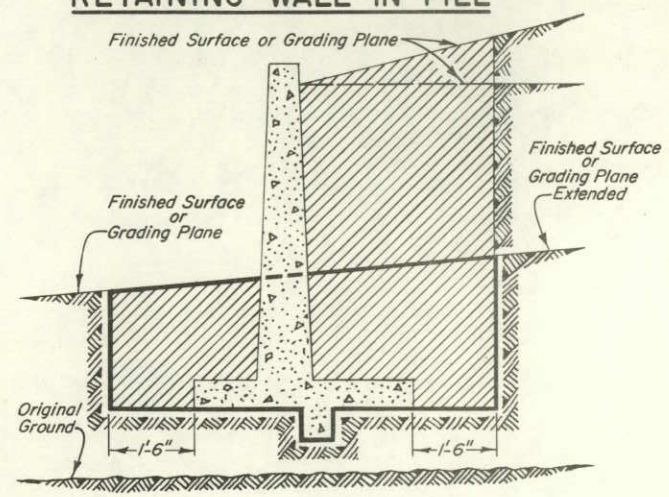

● One thickness of Building Paper (30 weight) or Plastic Sheeting (10 mil.) or 4" layer of loose straw or acceptable equivalent.

● The highest nominal thickness for Underdrain shall be:

TYPE III PIPE	CLASS I & II	CLASS III
STEEL	.052"	.064"
ALUMINUM	.048"	.060"

GENERAL NOTES (R-1)

All work shall be done in accordance with the Standard Specifications applicable to the project.

* —— Where the roadway cross section is in FILL, excavation for box culverts shall be done as follows:

1. Embankment shall be built up to one foot above the bottom of the box culvert.
2. The trench shall then be excavated to accommodate construction of the box culvert.

Excavation and Backfill patterns different from those indicated on these sheets will be shown elsewhere on the Plans.

Excavation for structure installation shall be classified as "Structure Excavation" unless otherwise shown on the Plans.

Structure footings which are located in rock shall be poured out to undisturbed rock without forming.

DEPARTMENT OF HIGHWAYS
STATE OF COLORADO
DIVISION OF HIGHWAYS

EXCAVATION & BACKFILL FOR STRUCTURES

Designed by M R H	Approved by D. L. Vernon
Made by J R B	Staff Design Engineer
Checked by O L S	Date: March 4, 1976

FORM D. O. H. 126
MARCH 1964

STANDARD M-206-AB

(MARCH 4, 1976)
(SHEET 2)

FEDERAL ROAD REGION NO.	DIVISION	PROJ. NO.	SHEET NO.	TOTAL SHEETS
VIII	COLORADO			

	REVISIONS:		
R-1	3-26-76	Revision date only.	T. A. L.
R-2	4-16-76	" " "	T. A. L.

STRUCTURE EXCAVATION MEASUREMENT FOR PIPE CULVERTS

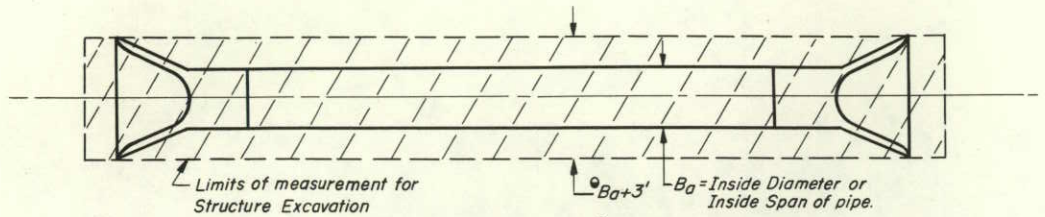

PLAN

*Ba+6' for structural plate pipe culverts.

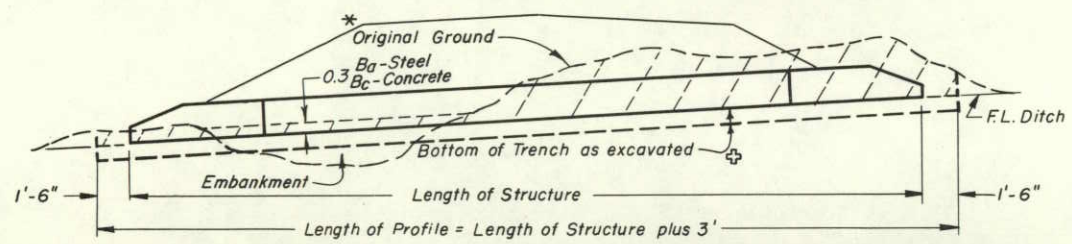

PROFILE

✣ For applicable limits of Structure Excavation, see bedding details on standards for metal, reinforced concrete and structural plate pipe culverts.

STRUCTURE EXCAVATION MEASUREMENT FOR CONCRETE BOX CULVERTS

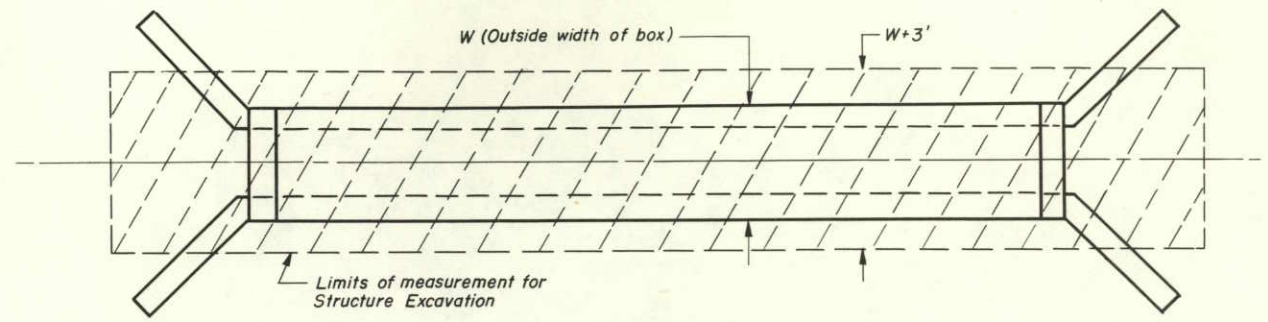

PLAN

Without Channel Change or Channel Improvement

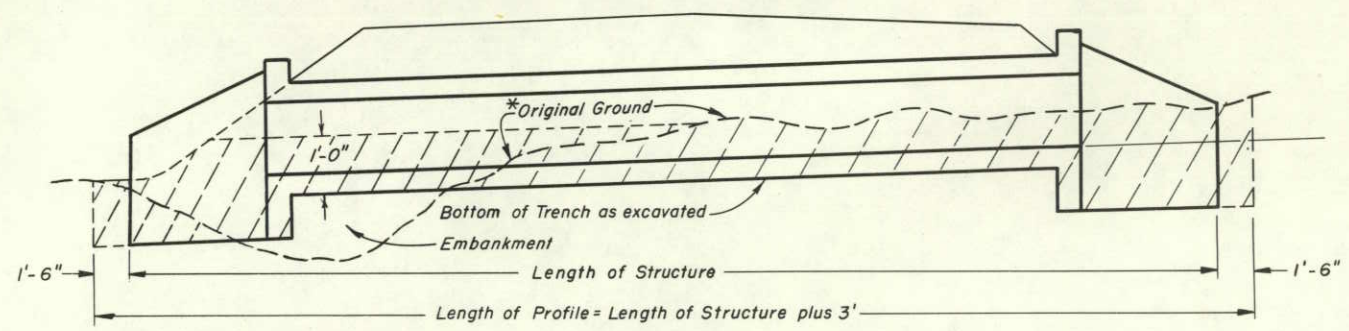

PROFILE

With Channel Change or Channel Improvement

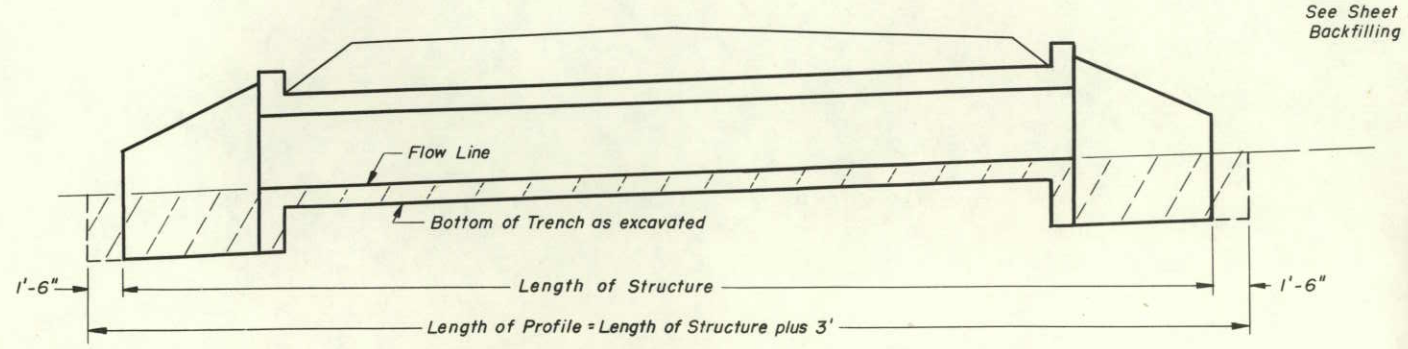

PROFILE

STRUCTURE EXCAVATION MEASUREMENT FOR DIVERSION OR DIVISION BOXES

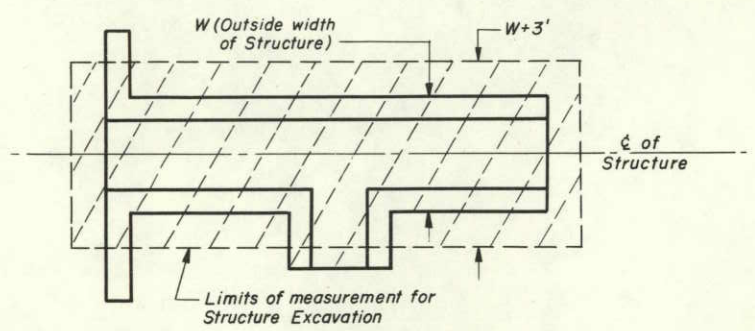

PLAN

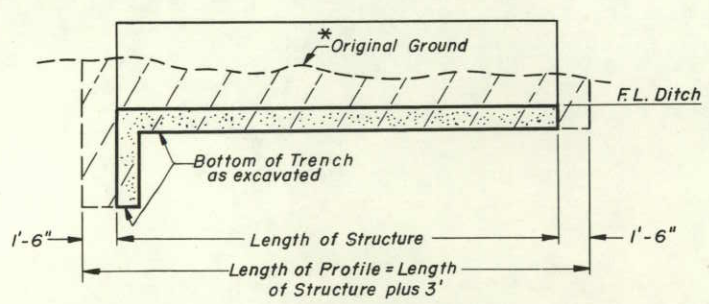

PROFILE

* Along ℄ of Structure

Areas to be used for Structure Excavation computations.

GENERAL NOTES (Continued)

TRENCH INSTALLATION:

Trenches over 5 feet in depth shall be either shored or the trench walls shall be sloped to the angle of repose. If sloped, the bottom of the slope shall be a minimum of 1 foot above the top of the pipe.

Shoring will be required when the bottom of the slope is more than 3 feet above the bottom of the trench. Shoring shall extend a minimum of one foot above the bottom of the slope.

Timber sheeting or shoring may be cut off 1 foot above the top of the pipe after backfilling is complete.

NOTE:
See Sheet 1 for General Notes and Backfilling Details.

DEPARTMENT OF HIGHWAYS
STATE OF COLORADO
DIVISION OF HIGHWAYS

EXCAVATION AND BACKFILL FOR STRUCTURES

Designed by: M.R.H.	Approved by: R. L. Brown
Made by: H.P.B.	Staff Design Engr.
Checked by:	Date: March 4, 1976

DIVISION OF HIGHWAYS, STATE OF COLORADO
D.O.H. FORM NO. 126
REV. MARCH, 1974

STANDARD M-206-AB

(MARCH 4, 1976)
(SHEET 3)

FEDERAL ROAD REGION NO.	DIVISION	PROJ. NO.	SHEET NO.	TOTAL SHEETS
VIII	COLORADO			

REVISIONS			
R-1	3-26-76	Revision date only.	T.A.L.
R-2	4-16-76	" " "	T.A.L.

IN FILL

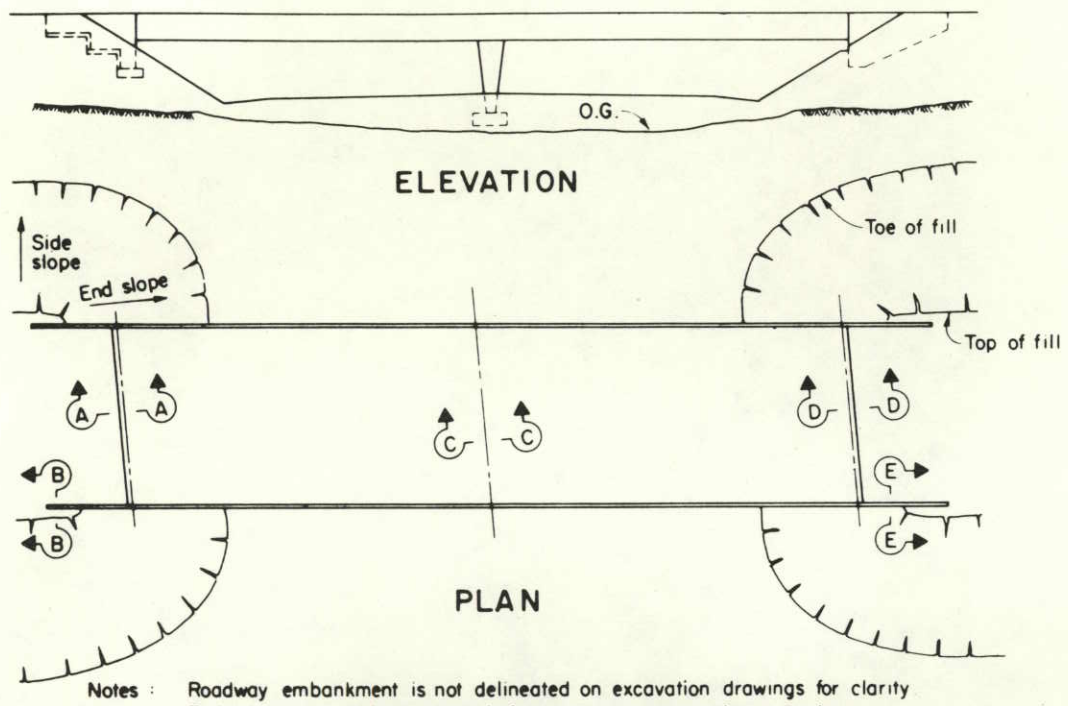

Notes: Roadway embankment is not delineated on excavation drawings for clarity
Embankment must be in place before structure excavation is made

EXCAVATION — BACKFILL

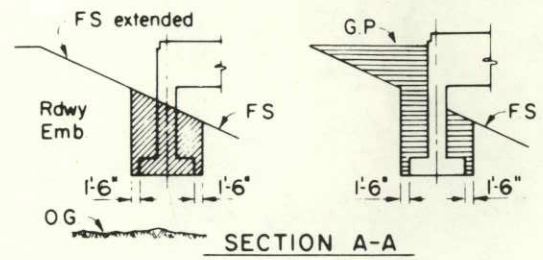

SECTION A-A

EXCAVATION — BACKFILL

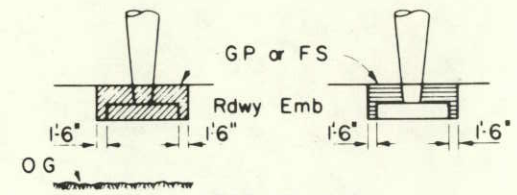

SECTION C-C

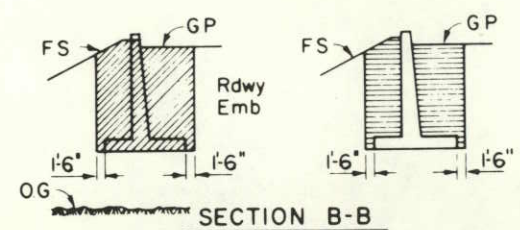

SECTION B-B

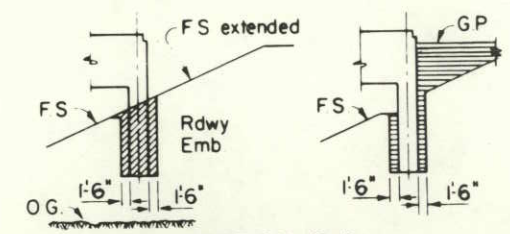

SECTION D-D

EXCAVATION — BACKFILL

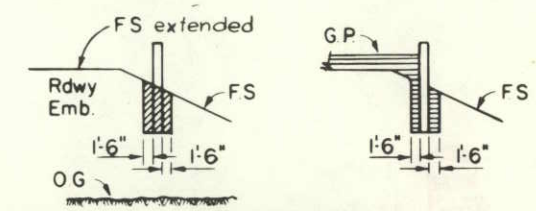

SECTION E-E

IN CUT

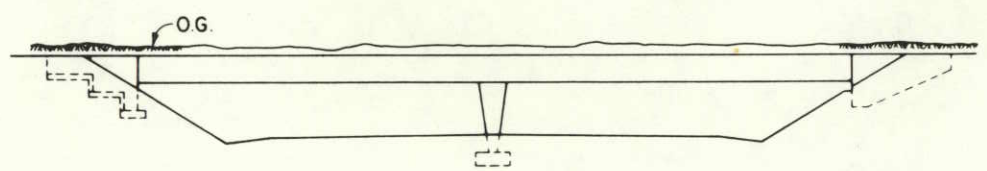

ELEVATION

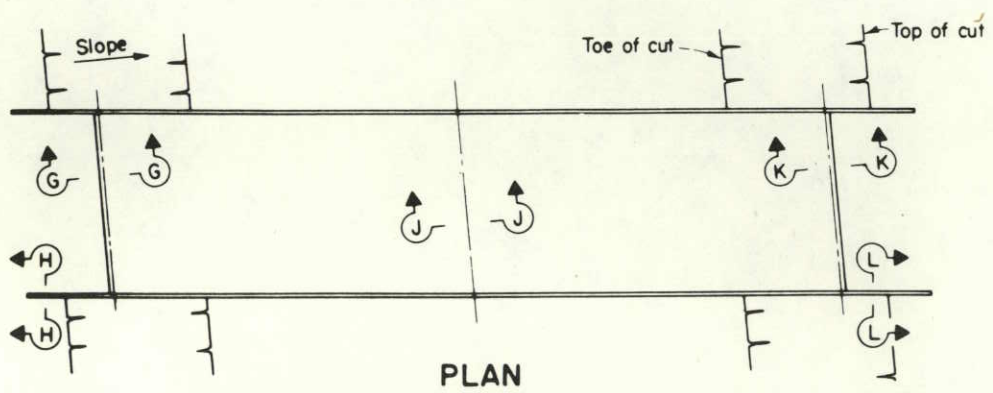

Note: If no roadway excavation is involved at bridge, structure excavation is measured from original ground.

EXCAVATION — BACKFILL

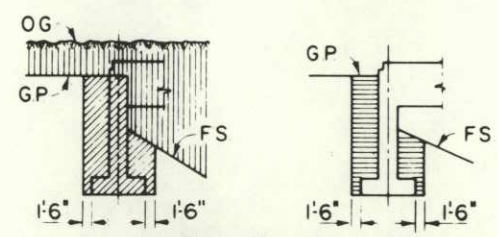

SECTION G-G

EXCAVATION — BACKFILL

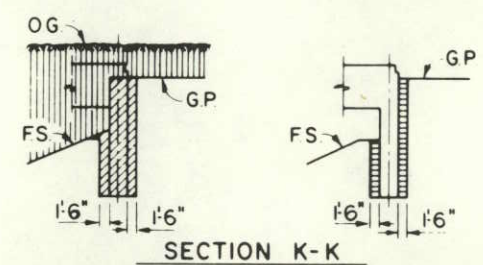

SECTION K-K

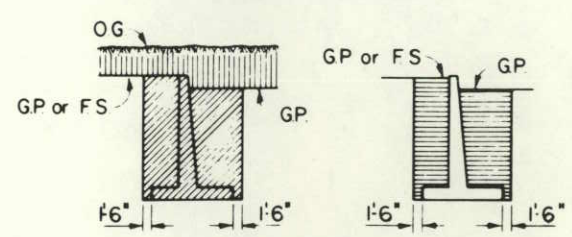

SECTION H-H

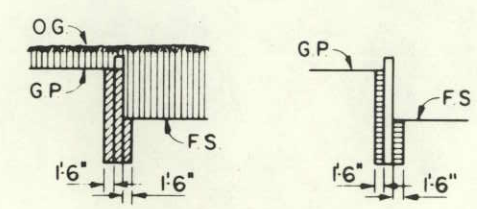

SECTION L-L

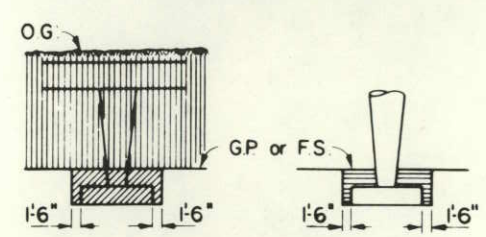

SECTION J-J

ABBREVIATIONS

O.G. Original Ground
F.S. Planned Finished Surface
G.P. Planned Grading Plane

LEGEND

Structure Excavation
Structure Backfill
Roadway Excavation

DEPARTMENT OF HIGHWAYS
STATE OF COLORADO
DIVISION OF HIGHWAYS

EXCAVATION & BACKFILL FOR STRUCTURES (BRIDGE)

Designed by M R H Made by J R B Checked by O L S	Accepted by D. L. Vernon Staff Design Engineer Date: March 4, 1976

STANDARD M-603-CA

(NOVEMBER 10, 1967)

FEDERAL ROAD REGION NO.	DIVISION	PROJ. NO.	SHEET NO.	TOTAL SHEETS
VIII	COLORADO			

	REVISIONS		
R-1	4-19-68	Welding-Conc. Arch, Ellipt.-Gen. Notes	M.R.H.
R-2	7-23-68	Dept. Name.	M.R.H.
R-3	3-10-71	Change all gage to thickness.	M.R.H.
R-4	6-25-71	General Note for Joint Fasters.	M.R.H.
R-5	8-21-75	Gen'l. Note & CSPA Table.	M.R.H.

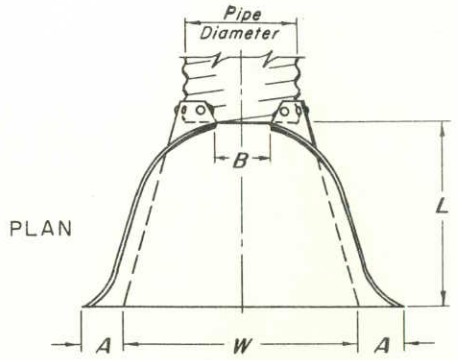

(R-3)

PIPE DIAM. in.	THICKNESS in.	DIMENSIONS A (1"±) in.	B (Max.) in.	H (1"±) in.	L (1½"±) in.	W (2"±) in.	T in.
12	.064	6	6	6	21	24	34
15	.064	7	8	6	26	30	40
18	.064	8	10	6	31	36	46
21	.064	9	12	6	36	42	52
24	.064	10	13	6	41	48	58
30	.079	12	16	8	51	60	70
36	.079	14	19	9	60	72	94
42	.109	16	22	11	69	84	106
48	.109	18	27	12	78	90	112
54	.109	18	30	12	84	102	124
60	.109	18	33	12	87	114	136
66	.109	18	36	12	87	120	142
72	.109	18	39	12	87	126	148
78	.109	18	42	12	87	132	154
84	.109	18	45	12	87	138	160

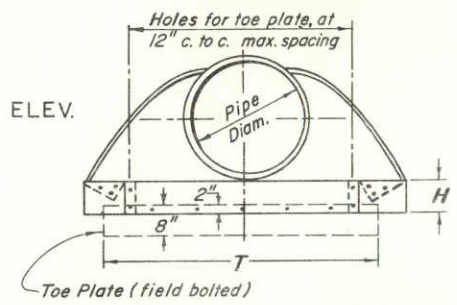

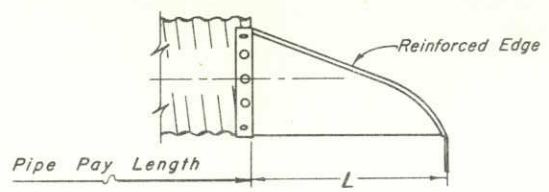

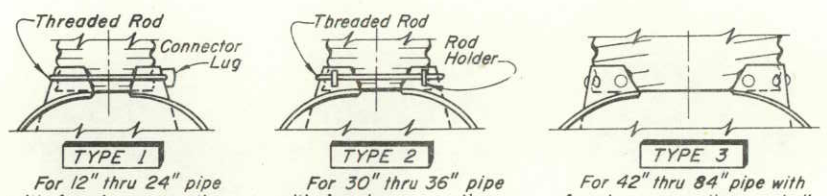

NOTE:
Type 3 connections shall consist of an end section shop attached to a minimum 2 ft. of pipe with galvanized rivets or bolts, or by welding. (R-1)

TYPICAL CONNECTIONS

END SECTION AND CONNECTION DETAILS FOR ROUND CORRUGATED STEEL PIPE CULVERTS

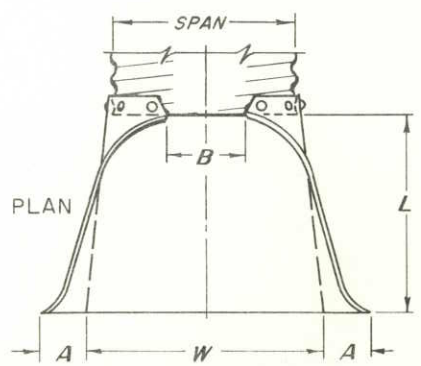

(R-3)

PIPE ARCH SPAN • RISE in. in.	THICKNESS in.	DIMENSIONS A (1"±) in.	B (Max.) in.	H (1"±) in.	L (1½"±) in.	W (2"±) in.	T in.
17 x 13	.064	7	9	6	19	30	40
21 x 15	.064	7	10	6	23	36	46
24 x 18	.064	8	12	6	28	42	52
28 x 20	.064	9	14	6	32	48	58
35 x 24	.079	10	16	6	39	60	70
42 x 29	.079	12	18	8	46	75	85
49 x 33	.109	13	21	9	53	85	103
57 x 38	.109	18	26	12	63	90	108
64 x 43	.109	18	30	12	70	102	120
71 x 47	.109	18	33	12	77	114	132

(R-5)

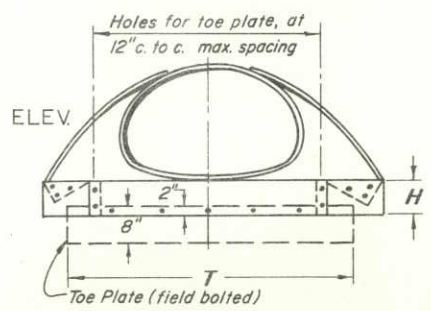

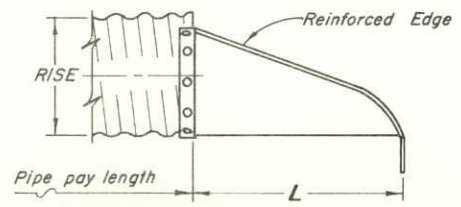

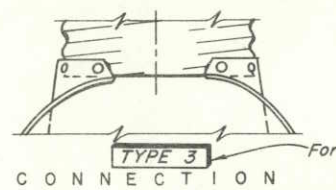

NOTE:
End sections for pipe arches shall be shop attached to a minimum 2 ft. of pipe with galvanized rivets or bolts, or by welding. (R-1)

For all sizes of pipe with Annular or Helical corrugations.

END SECTION AND CONNECTION DETAIL FOR CORRUGATED STEEL PIPE ARCH CULVERT

GENERAL NOTES

(R-5)

All work shall be done in accordance with the Standard Specifications applicable to the project.

Concrete End Sections are to be furnished with tongue or groove as req'd.

Alternate equivalent designs for Concrete End Sections may be submitted to the Division for approval. Design length of culvert is based on length of End Section shown in table. Additional pipe required to provide the design length of the culvert shall be furnished by and at the expense of the Contractor.

Other sizes of concrete pipe and end sections may be available upon request; however, the designer should contact supplier prior to calling for sizes other than those shown on this standard.

Inside configuration and joint of concrete end section and pipe shall match.

End sections for CSP Arch Culvert shall match the dimensions of the culvert shown on plans.

Galvanized Toe Plate as shown will be required on End Sections for corrugated steel pipe and shall be same thickness as End Sections. Toe Plate shall be field bolted to End Section with 3/8" galvanized bolts, nuts and washers.

Designs for Aluminum End Sections for use on aluminum culverts shall be submitted to the Division for approval prior to use.

Concrete Pipe Joint Fasteners, where shown on plans, shall be installed so that a minimum of 15 linear feet of the outlet end of the pipe are mechanically locked together. End Section lengths, when used, will be included in the 15 l.f. requirement.

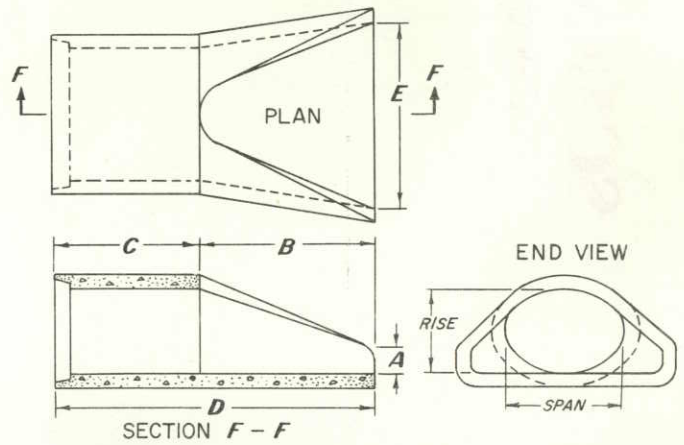

EQUIVALENT CIRCULAR DIAM. (Inches)	NOMINAL (in.) SPAN	RISE	DIMENSIONS (Inches) A	B	C	D	E
24	30	19	8½	39	33	72	48
30	38	24	9½	54	18	72	60
36	45	29	11⅛	60	24	84	72
42	53	34	15¾	60	36	96	78
48	60	38	21	60	36	96	84
54	68	43	25½	60	36	96	90
60	76	48	30	60	36	96	96

END SECTION FOR REINFORCED CONCRETE ELLIPTICAL PIPE

(R-1)

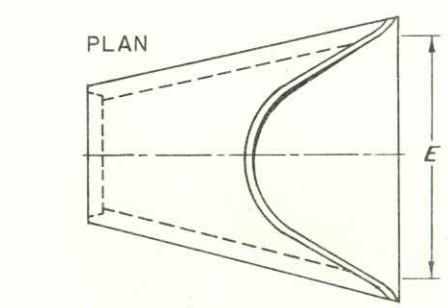

PIPE I. D. in.	DIMENSIONS A in.	B in.	C in.	D in.	E in.
12	5½	23	49	72	24
15	7	26	47	73	29
18	11½	26	48	74	36
24	12	43	54	97	48
30	17	53	43	96	60
36	18	60	37	97	71
42	24	61	36	97	78
48	28	70	28	98	84
54	27	65	35	100	90
60	36	58	40	98	96
72	34½	75	21	96	108

(R-1)

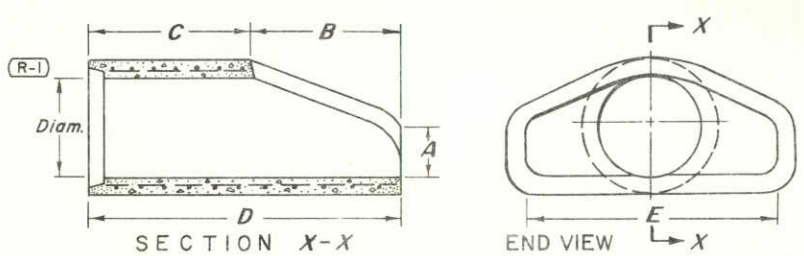

(R-1) (R-1)

END SECTION FOR REINFORCED CONCRETE CIRCULAR PIPE

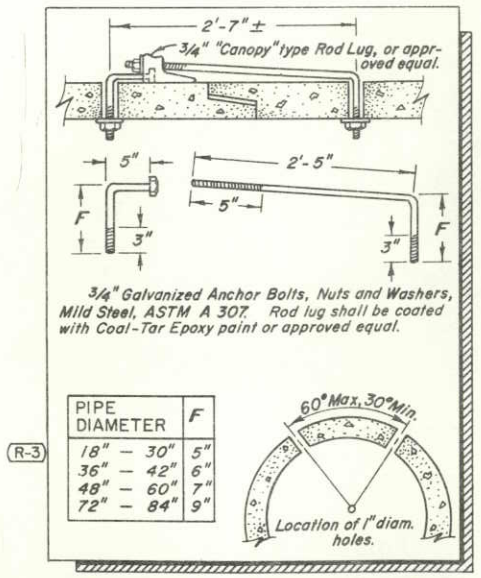

PIPE DIAMETER	F
18" - 30"	5"
36" - 42"	6"
48" - 60"	7"
72" - 84"	9"

(R-3)

CONCRETE JOINT FASTENER

(R-4)

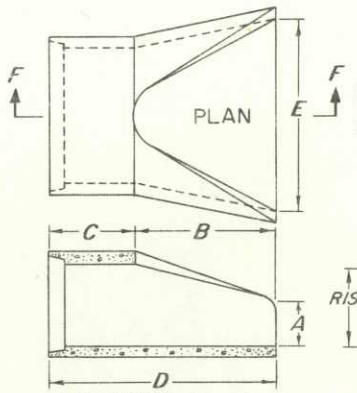

(R-5)
See Figure 1 of AASHTO M 206 for actual sizes.

EQUIVALENT CIRCULAR DIAM. (Inches)	NOMINAL (in.) SPAN	RISE	DIMENSIONS (Inches) A	B	C	D	E
24	29	18	8½	39	33	72	48
30	36	22	9½	50	46	96	60
36	43	27	11⅛	60	36	96	72
42	50	31	15 13/16	60	36	96	78
48	58	36	21	60	36	96	84
54	65	40	25½	60	36	96	90
60	72	44	31	60	36	96	96
72	88	54	31	60	39	99	120

END SECTION FOR REINFORCED CONCRETE ARCH PIPE

(R-1)

(R-2)

DEPARTMENT OF HIGHWAYS
STATE OF COLORADO
DIVISION OF HIGHWAYS

CONCRETE AND METAL END SECTIONS

Designed by	M.R.H.	Approved by	
Made by	J.R.B.	Staff Design Engineer (ASST)	
Checked by	R.S.M.	Date: November 10, 1967	

STANDARD M-603-MA

(JANUARY 11, 1974)

FEDERAL ROAD REGION NO.	DIVISION	PROJ. NO.	SHEET NO.	TOTAL SHEETS
VIII	COLORADO			

REVISIONS			
(R-1)	8-20-75	Gen'l. Notes & Table IV.	M.R.H.

FILL HEIGHT & THICKNESS TABLES FOR METAL CULVERT PIPE

TABLE I CORRUGATED STEEL PIPE

$2^2/_3$-inch by $^1/_2$-inch Corrugations
Riveted, Welded or Helical Fabrication

Pipe Diameter (inches)	Minimum Cover, Top of Pipe to Top of Subgrade (inches)	Maximum Fill Heights above Top of Pipe in Feet — Minimum Thickness Required (Decimal inches) 0.064	0.079	0.109	0.138	0.168
12	12	84	91	—	—	—
15	12	67	73	—	—	—
18	12	56	61	—	—	—
24	12	42	46	59	—	—
30	12	34	36	47	—	—
36	12	28	30	39	41	—
42	12	31	43	46 (67)	48 (70)	50 (73)
48	12	27	37	45 (58)	46 (61)	47 (64)
54	12	—	33	43 (52)	44 (54)	45 (57)
60	12	—	—	43 (47)	43 (49)	44 (51)
66	12	—	—	42	43	43 (47)
72	12	—	—	—	41	43
78	12	—	—	—	—	39
84	12	—	—	—	—	35

Values for elongated pipe are shown in parentheses.

TABLE II CORRUGATED STEEL PIPE ARCH

$2^2/_3$-inch by $^1/_2$-inch Corrugations
Riveted, Welded or Helical Fabrication

Pipe Dimensions Span x Rise (inches)	Equiv. Diameter (inches)	Corner Radius (inches)	Minimum Cover, Top of Pipe to Top of Subgrade for 2 Tons per sq. ft (inches)	Minimum Thickness Required (Decimal inches)	Maximum Fill Heights above Top of Pipe in Feet — Corner Bearing Pressure in Tons per Square Foot: *2 Tons	3 Tons*
17 x 13	15	3	18	0.064	13	15+
21 x 15	18	3	18	0.064	12	15+
24 x 18	21	3	18	0.064	10	15+
28 x 20	24	3	18	0.064	10	15
35 x 24	30	3	18	0.064	9	14
42 x 29	36	$3^1/_2$	18	0.064	9	13
49 x 33	42	4	18	0.079	8	12
57 x 38	48	5	18	0.109	8	12
64 x 43	54	6	18	0.109	8	12
71 x 47	60	7	18	0.138	8	12
77 x 52	66	8	18	0.168	8	12
83 x 57	72	9	18	0.168	9	13

TABLE III CORRUGATED STEEL PIPE

3-inch by 1-inch Corrugations
Riveted, Welded, Helical or Bolted Fabrication

Pipe Diameter (inches)	Minimum Cover, Top of Pipe to Top of Subgrade (inches)	Maximum Fill Heights above Top of Pipe in Feet ⚠ — Minimum Thickness Required (Decimal inches) 0.064	0.079	0.109	0.138	0.168
36	12	48	60	78 (88)	89 (106)	101 (118)
42	12	41	51	64 (76)	71 (91)	79 (101)
48	12	36	45	57 (66)	61 (80)	66 (88)
54	12	32	40	52 (59)	55 (71)	59 (79)
60	12	29	36	49 (53)	51 (64)	54 (71)
66	12	26	33	47	49 (58)	51 (64)
72	12	24	30	44	47 (53)	49 (59)
78	12	22	28	41	46 (49)	47 (54)
84	12	21	26	38	45	46 (51)
90	12	19	24	35	43	45
96	12	18	22	33	40	44
102	24	17	21	31	38	42
108	24	—	20	30	35	39
114	24	—	19	28	34	37
120	24	—	—	27	32	35

⚠ *Fill heights greater than 90' shall be used only after thorough investigation of foundation material.*

TABLE IV CORRUGATED STEEL PIPE ARCH

3-inch by 1-inch Corrugations
Riveted, Welded or Helical Fabrication

Pipe Dimensions Span x Rise (inches)	Equiv. Diameter (inches)	Corner Radius (inches)	Minimum Cover, Top of Pipe to Top of Subgrade for 2 Tons per sq. ft. (inches)	Minimum Thickness Required (Decimal inches)	Maximum Fill Heights above Top of Pipe in Feet — Corner Bearing Pressure in Tons per Square Foot: *2 Tons	3 Tons*
43 x 27	36	5	18	0.064	12	15+
50 x 31	42	6	18	0.064	12	15+
58 x 36	48	7	18	0.064	12	15+
65 x 40	54	8	18	0.064	12	15+
72 x 44	60	9	18	0.064	12	15+
73 x 55	66	12	18	0.064	15+	-------
81 x 59	72	14	18	0.079	15	-------
87 x 63	78	14	18	0.079	14	15+
95 x 67	84	16	18	0.109	13	15+
103 x 71	90	16	24	0.109	12	15+
112 x 75	96	18	24	0.109	11	15+
117 x 79	102	18	24	0.109	10	15
128 x 83	108	18	24	0.138	9	14

(R-1)

TABLE V CORRUGATED ALUMINUM PIPE

$2^2/_3$-inch by $^1/_2$-inch Corrugations
Riveted, Helical or Spot Welded Fabrication

Pipe Diameter (inches)	Minimum Cover, Top of Pipe to Top of Subgrade (inches)	Maximum Fill Heights above Top of Pipe in Feet — Riveted or Helical Fabrication, Minimum Thickness Required (Decimal inches) 0.060	0.075	0.105	0.135	0.164	Spot Welded Fabrication 0.060	0.075
12	12	45	45	78	81	84	26	33
18	12	30	30	52	54	56	18	22
24	12	22	22	39	41	42	14	16
30	12	18	18	31	32	34	11	13
36	12	15	15	26	27	28	9	11
42	12	—	26	43	43	44	—	—
48	12	—	—	40	41	43	—	—
54	12	—	—	35	37	38	—	—
60	12	—	—	—	33	34	—	—
66	12	—	—	—	30	31	—	—
72	12	—	—	—	—	29	—	—

TABLE VI CORRUGATED ALUMINUM PIPE ARCH

$2^2/_3$-inch by $^1/_2$-inch Corrugations
Riveted, Welded or Helical Fabrication

Pipe Dimensions Span x Rise (inches)	Equiv. Diameter (inches)	Corner Radius (inches)	Minimum Cover, Top of Pipe to Top of Subgrade for 2 Tons per sq. ft. (inches)	Minimum Thickness Required (Decimal inches)	Maximum Heights of Fill above Top of Pipe in Feet — Corner Bearing Pressure in Tons per Square Foot: *2 Tons	3 Tons*
18 x 11	15	4	18	0.060	15	-------
22 x 13	18	4	18	0.060	14	-------
25 x 16	21	4	18	0.060	12	15+
29 x 18	24	$4^1/_2$	18	0.060	10	15+
36 x 22	30	5	18	0.060	9	14
43 x 27	36	$5^1/_2$	18	0.075	9	13
50 x 31	42	6	18	0.105	8	12
58 x 36	48	7	18	0.135	8	12
65 x 40	54	8	18	0.135	8	12
72 x 44	60	9	18	0.164	8	12

** In the absence of a Bearing Pressure Report use fill heights listed under "2 Tons". Where bearing pressures exceeding 2 tons per square foot are required for given fill heights, the foundation material shall be investigated to determine its bearing capacity.*

METAL CULVERT WITH END SECTIONS

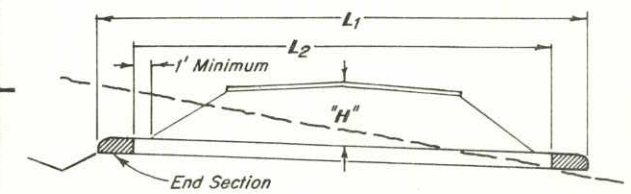

METAL CULVERT WITHOUT END SECTIONS

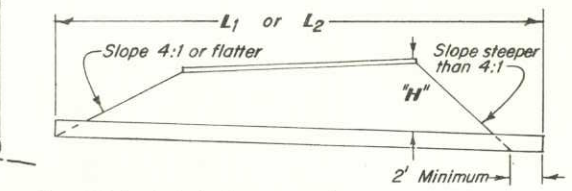

"H" = Maximum height of fill over top of Culvert, including pavement.
L_1 = Length of Culvert to be measured when placed in accordance with Section 617.
L_2 = Length of pipe to be measured when placed in accordance with Section 603. Length of extension, when placed in accordance with Section 617, shall be the actual number of feet of new culvert required.

INSTALLATION OF METAL CULVERT PIPE

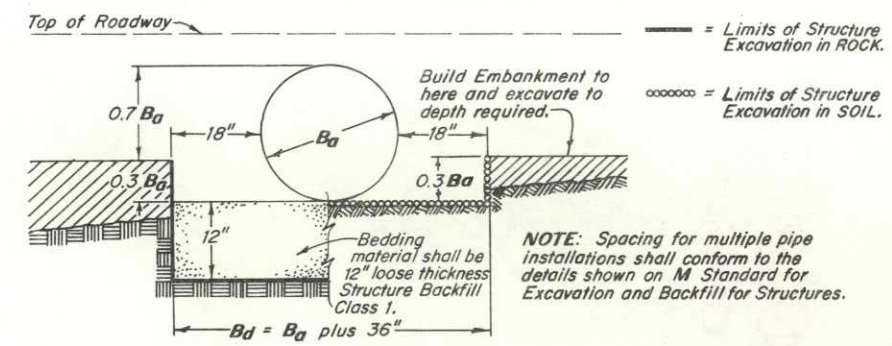

NOTE: Spacing for multiple pipe installations shall conform to the details shown on M Standard for Excavation and Backfill for Structures.

(R-1)

GENERAL NOTES

All work shall be done in accordance with the Standard Specifications applicable to the project.

The tables on this sheet show minimum thickness for structural requirements only. They are intended for use only where corrosive and/or abrasive conditions are negligible. Heavier metal and/or protective coatings shall be used where site investigations indicate corrosive and/or abrasive conditions.

Pipe arch with equal periphery and with span and rise dimensions approximately equal to those required by plans will be permitted.

During construction, adequate cover shall be provided to protect the structure from damage.

Pipe shall be placed with longitudinal seams at the sides or quarter points but not along top of vertical axis.

When a culvert is to be extended with pipe of different material, the connection shall conform to the details on plans or be approved.

Structural plate pipes of equal or larger diameter, conforming to Section 510 of the Standard Specifications, may be substituted for the pipes shown on this sheet at no additional cost to the State.

Variations from corner radii shown will be acceptable provided the pipe is of sufficient strength to support it's designated fill height.

The minimum depth of fill excluding pavement over corrugated metal pipe culvert shall be as staked by the Engineer, but shall not be less than shown in the Fill Height Tables.

Extensions for CSP Arch Culvert shall match the dimensions of the culvert shown on plans.

Backfill and compaction shall be in accordance with Section 206.

TRENCH INSTALLATION

Installation and Maximum Fill Heights shall conform to the M Standard for "Pipe Sewer in Trench."

DEPARTMENT OF HIGHWAYS
STATE OF COLORADO
DIVISION OF HIGHWAYS

METAL CULVERT PIPE
H-20 LOADING

Designed by	M.R.H.	Approved by	Jon M. Cox
Made by	J.R.B.	Staff Design Engineer	
Checked by	O.L.S.	Date:	January 11, 1974

DEPARTMENT OF HIGHWAYS—STATE OF COLORADO
FORM D. O. H. 126
MARCH 1964

STANDARD M-604-BA

(JUNE 1, 1967)

FEDERAL ROAD REGION NO.	DIVISION	PROJ. NO.	SHEET NO.	TOTAL SHEETS
VIII	COLORADO			

	REVISIONS		
R-1	9-13-67	Grate Detail & Quants.	M.R.H.
R-2	12-18-67	Connect to skewed culvert, General Note	M.R.H.
R-3	7-19-68	Note & Dept. Name	M.R.H.
R-4	4-15-71	Conc. in G. Note and table. Re-do grate welds.	M.R.H.
R-5	5-24-71	Lower fastener bolt so top is flush w. conc.	M.R.H.
R-6	4-3-74	"H" to flow line ℄ in table. WWF in Gen'l. N.	M.R.H.
R-7	11-19-74	Grate Install. Dimensions. Quantities.	M.R.H.
R-8	7-3-75	Added alt. WWF.	M.R.H.
R-9	3-4-76	Gen. Note. Conc. Sl. & Ditch Paving	M.R.H.

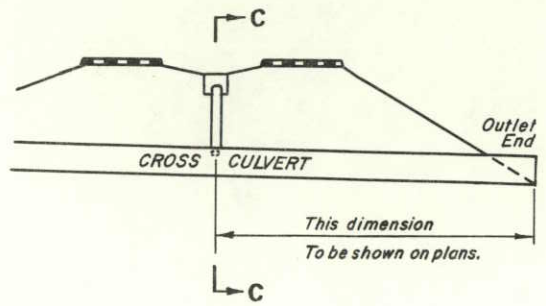

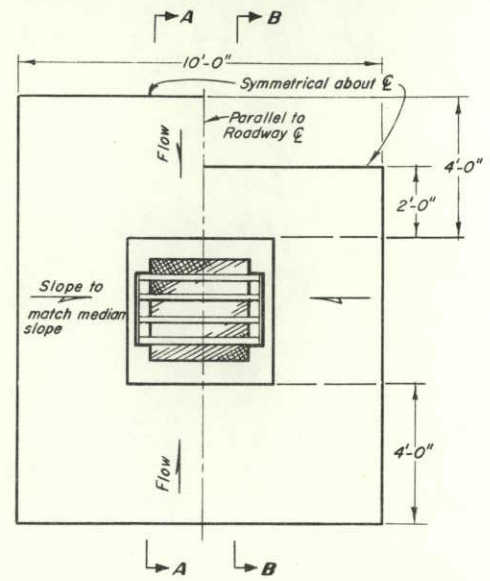

LAYOUT OF INLET IN MEDIAN DITCH (R-7)

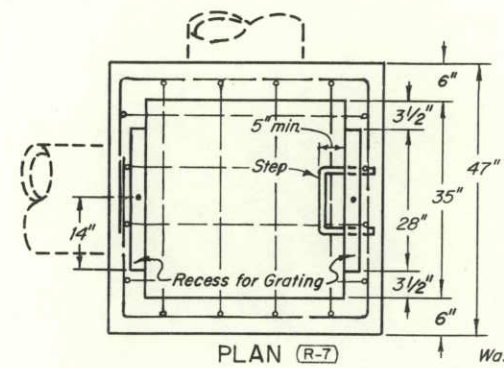

PLAN (R-7)

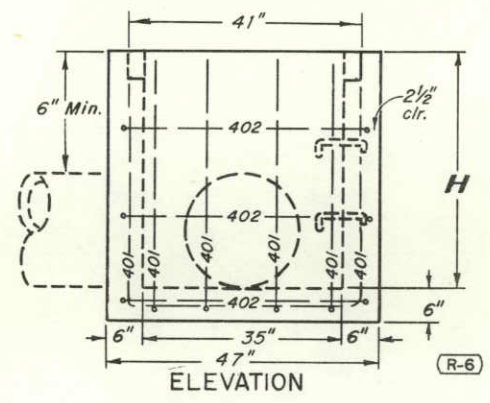

ELEVATION (R-6)

CONCRETE INLET (R-7)

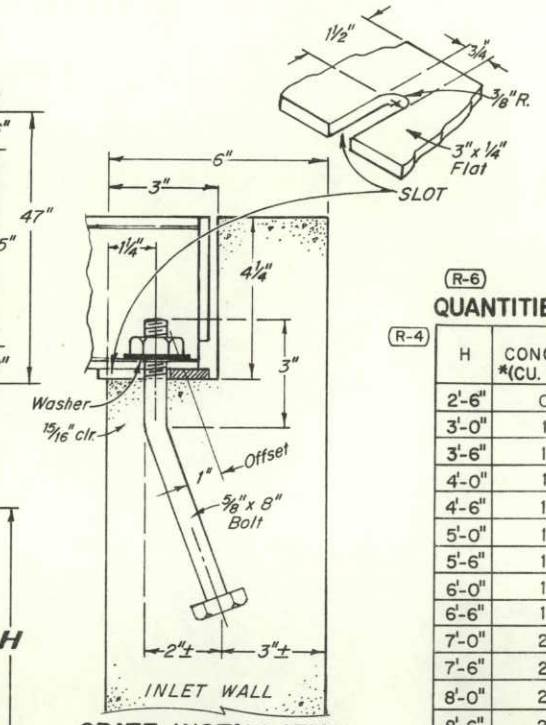

GRATE INSTALLATION DETAIL (R-7)

(R-6) (R-7)

QUANTITIES FOR ONE INLET

(R-4)

H	CONCRETE *(CU. YDS.)	REINF. STEEL (LBS.)	NO. STEPS REQ'D.
2'-6"	0.9	75	0
3'-0"	1.0	80	0
3'-6"	1.2	96	0
4'-0"	1.3	101	1
4'-6"	1.4	116	2
5'-0"	1.5	122	2
5'-6"	1.7	137	2
6'-0"	1.8	142	3
6'-6"	1.9	158	3
7'-0"	2.0	163	3
7'-6"	2.2	179	4
8'-0"	2.3	184	4
8'-6"	2.4	199	4
9'-0"	2.5	205	5
9'-6"	2.7	220	5
10'-6"	3.0	235	6
11'-6"	3.4	251	6

* Note: Includes Volume occupied by pipes. (R-3)

(R-7)

BAR LIST FOR H-2'-6" AND BENDING DIAGRAM

MARK	NO. REQ'D	HGT. "U"	LENGTH
401	2	2'-3"	7'-11"
401	6	2'-7"	8'-7"
402	3		15'-0"

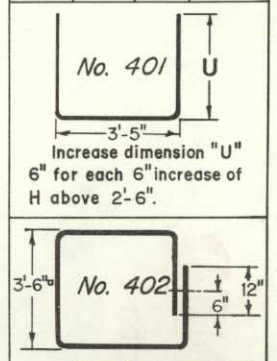

All bars to be ½" Dia.—Cut or bend around pipes as required.

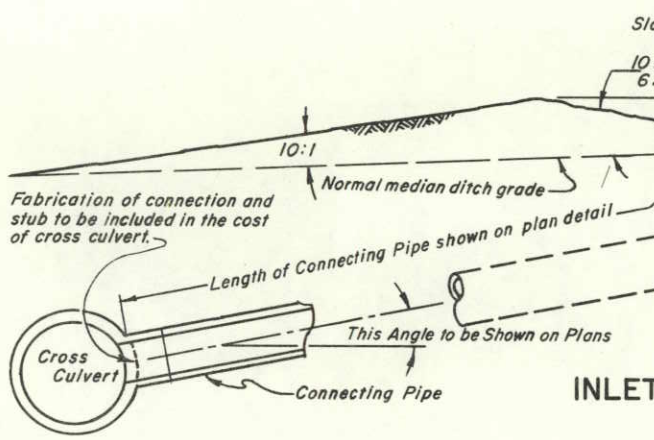

SECTION C-C

DETAIL SHOWING MEDIAN INLET CONNECTED TO A CROSS CULVERT

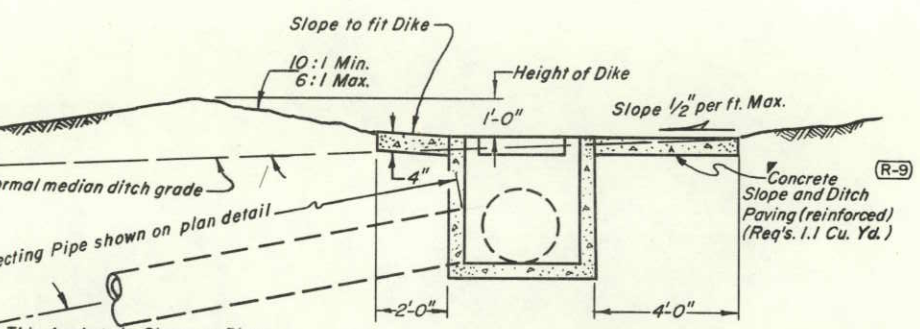

SECTION B-B

INLET FOR USE IN MEDIAN ON GRADE
(FLOW FROM ONE DIRECTION)

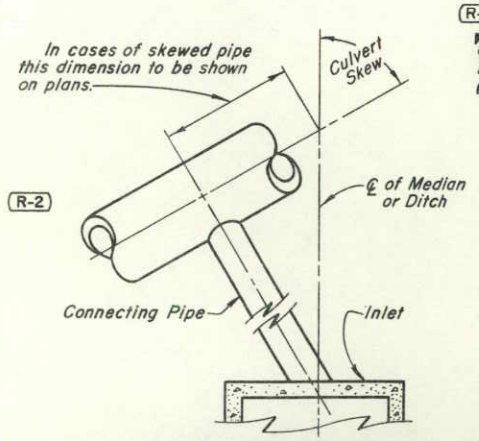

DETAIL SHOWING MEDIAN INLET CONNECTED TO A SKEWED CROSS CULVERT

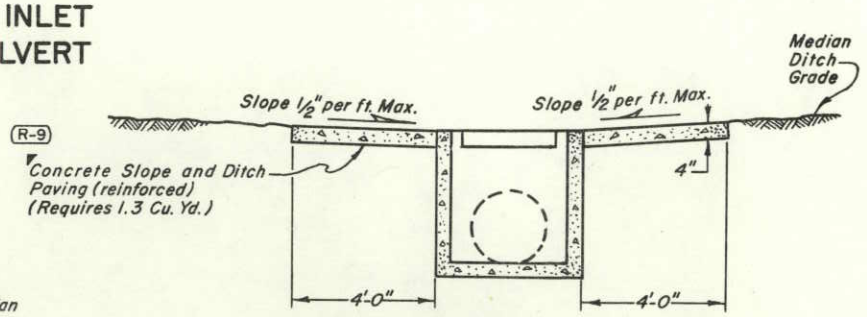

SECTION A-A

INLET FOR USE IN MEDIAN AT BOTTOM OF VERTICAL CURVE

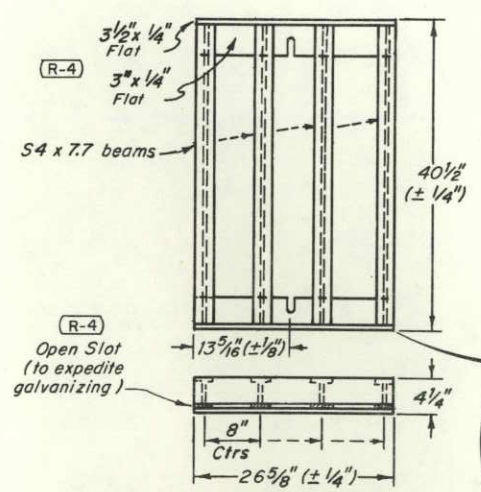

DETAIL OF GRATING (R-7)

(R-9)

GENERAL NOTES

All work shall be done in accordance with the Standard Specifications applicable to the project.

All concrete shall be Class A, B or D.

For detail of Inlet Step, see M-Standard "Steps for Manholes and Inlets".

All reinforcing bars shall be deformed, of intermediate grade, and shall be tagged with the station number and bar designation.

All edge distances not marked "clear" are to ℄ of bar.

Concrete slope and ditch paving shall conform to Section 507. Reinforcement for concrete slope paving shall be WWF 4 x 4 -W1.4 x W1.4 or WWF 6x6 -W2.1 x W2.1.

Grating shall conform to Section 604.

Inlet grating shall be galvanized as described for Frames, Grates, Covers and Steps in Section 712.

Steps or ladder will be required when Inlet "H" exceeds 3'-6".

Concrete Slope and Ditch Paving will be required when shown on Plans.

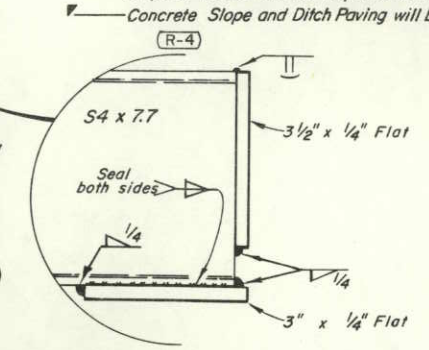

(R-7)

STEEL GRATE QUANTITIES

NO. PIECES	DESCRIPTION	LENGTH	Lb. per ft.	WEIGHT (lbs.)
4	S4 x 7.7 Beam	40"	7.70	103
2	3½" x ¼" Flat	26⅝"	2.98	13
2	3" x ¼" Flat	26⅝"	2.55	12
		TOTAL		128 lbs.

(R-3)

DEPARTMENT OF HIGHWAYS
STATE OF COLORADO
DIVISION OF HIGHWAYS

INLET, TYPE C

Designed by D. B. R.	Approved by J. E. Olson
Made by J. R. B.	Staff Design Engineer
Checked by R. S. M.	Date: JUNE 1, 1967

STANDARD M-604-D

(JULY 1, 1965)

FEDERAL ROAD REGION NO.	DIVISION	PROJ. NO.	SHEET NO.	TOTAL SHEETS
9	COLORADO			

REVISIONS			
R-1	7-23-68	Dept. Name.	M.R.H.

CAST IRON MANHOLE STEP

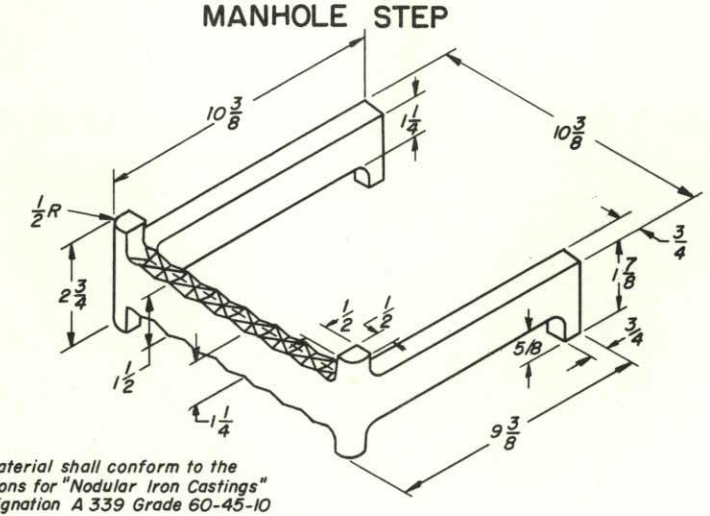

This material shall conform to the Specifications for "Nodular Iron Castings" ASTM Designation A 339 Grade 60-45-10

MILD STEEL MANHOLE OR INLET STEP

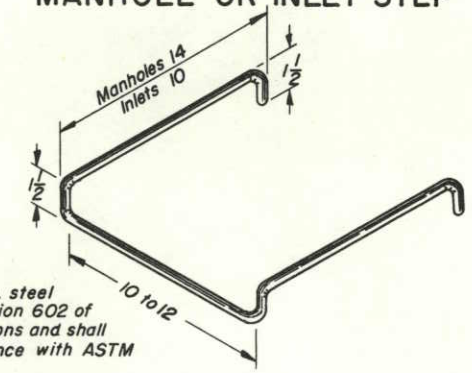

Step shall be 3/4 Dia. steel bars conforming to Section 602 of the Standard Specifications and shall be galvanized in accordance with ASTM Designation A 123.

CAST IRON MANHOLE STEP

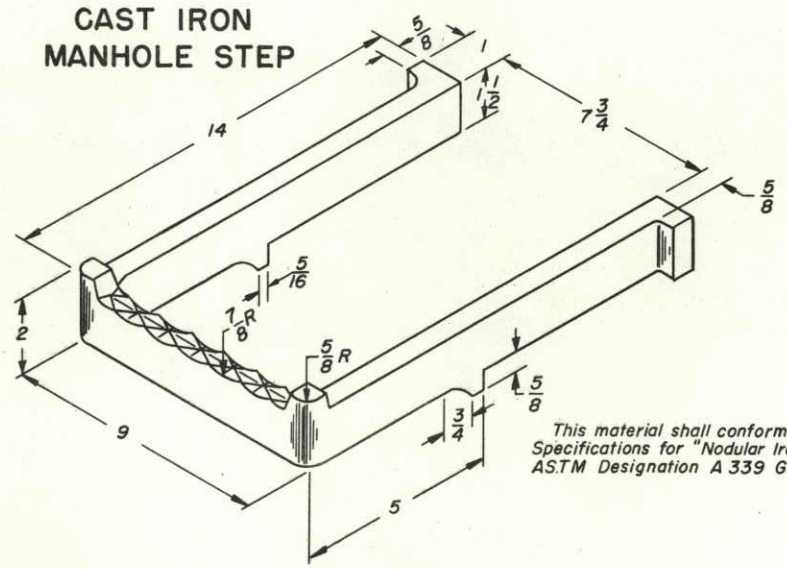

This material shall conform to the Specifications for "Nodular Iron Castings" ASTM Designation A 339 Grade 60-45-10.

GENERAL NOTES

All work shall be done according to the Standard Specifications applicable to the project.

Steps shall be included in the cost of "Manholes" or "Inlets".

All dimensions shown in inches.

(R-1)

DEPARTMENT OF HIGHWAYS
STATE OF COLORADO
DIVISION OF HIGHWAYS

STEPS FOR MANHOLES AND INLETS

Designed by: M.R.H.	Approved by:
Made by: H.P.B.	Staff Design Engr.
Checked by:	Date: July 1, 1965

STANDARD CURBS AND GUTTERS

STANDARD M-609-A

(JULY 1, 1965)

FED. ROAD REG. NO	DIVISION	PROJECT NO.	SHEET NO.
VIII	COLO		

REVISIONS			
R-1	11-16-65	Subtitles.	M.R.H.
R-2	2-14-66	General Notes.	M.R.H.
R-3	7-19-68	Dept. Name and Rev. Gen'l. Note.	M.R.H.
R-4	5-21-69	Provide variable width on conc. gtr.	M.R.H.
R-5	5-7-71	Add class B to conc. in Gen. Note.	M.R.H.
R-6	1-19-76	Driveways. Intersection. Gtr. type 2.	M.R.H.

CONCRETE PAVEMENT (DRIVEWAYS) SECTION A-A

(R-6)

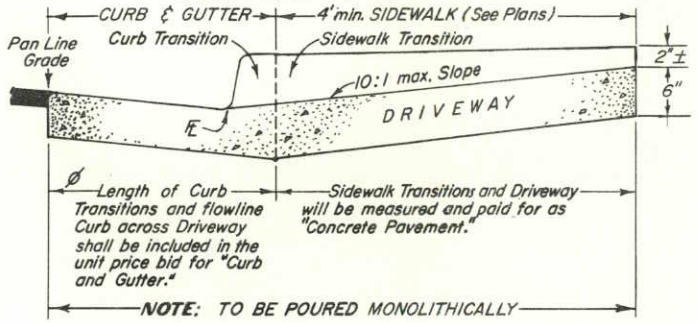

DETAIL OF CURB CUT FOR DRIVEWAYS

(R-6)

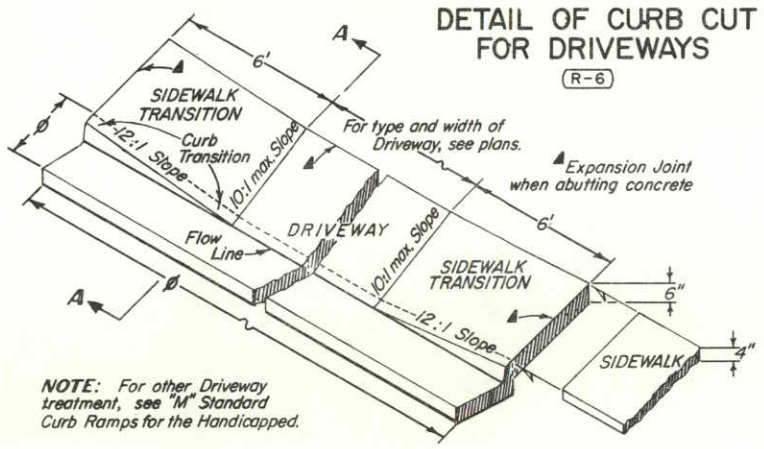

TRANSVERSE CONTRACTION JOINT FOR CONCRETE PAVEMENT (DRIVEWAYS)

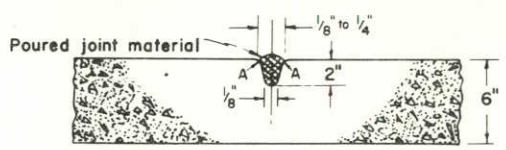

This joint required where length of slab exceeds 15 feet.

CONSTRUCTION OF CONCRETE GUTTERS AT INTERSECTIONS

(R-6)

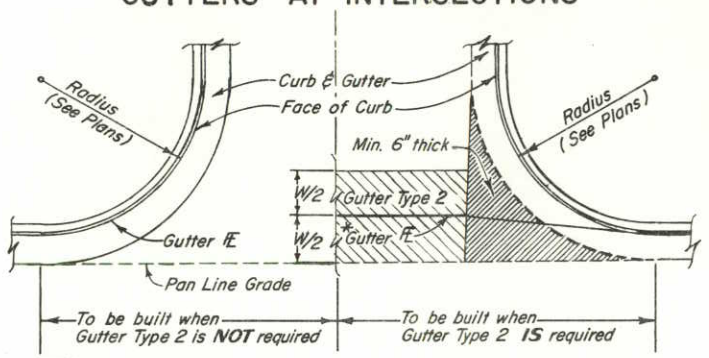

This area shall be poured monolithically with Curb and Gutter and paid for as "Concrete Pavement."

* Flow Line location will be established by W/2 shown on plans.

CONCRETE SIDEWALK

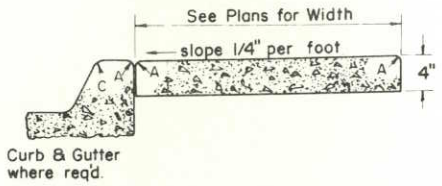

GUTTER Type 2

(R-1) (R-4)

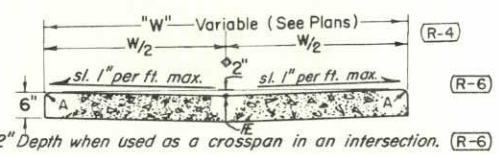

(R-4) (R-6)

◇ 2" Depth when used as a crosspan in an intersection. (R-6)

CURB Type 4 (6" Barrier) (Section B) — CURB Type 4 (6" Mountable) (Section M)

(R-1) (R-1)

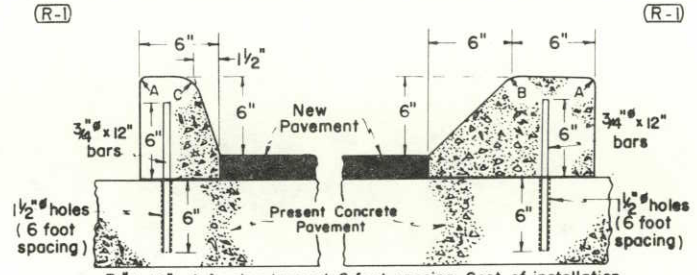

3/4"ø x 12" reinforcing bars at 6 foot spacing. Cost of installation to be included in unit price bid for Curb. Bars to be grouted in 1½"ø holes in present concrete. Grout to consist of 2 parts clean sand and 1 part cement.

CURB Type 2 (6" Barrier) (Section B) — CURB Type 2 (6" Mountable) (Section M)

(R-1) (R-1)

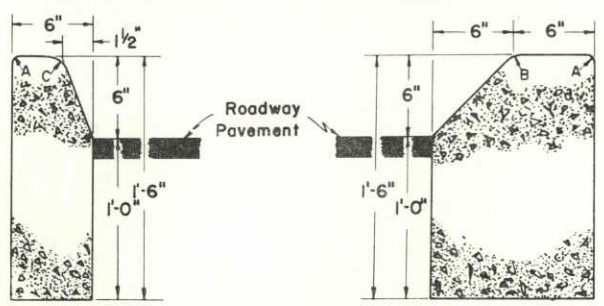

CURB Type 6 (4" Mountable) (Section M)

(R-1)

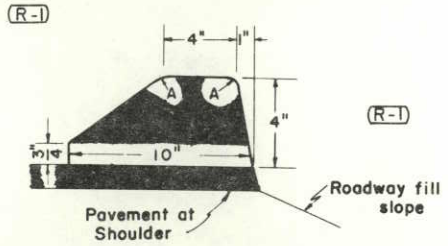

(R-1)

CURB AND GUTTER Type 2 (6" Barrier - 1' Gutter) (Section IB)

(R-1)

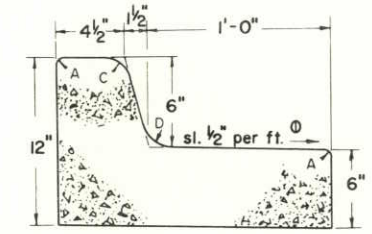

LEGEND FOR RADII
A = 1/8"
B = 1"
C = 1½"
D = 1½" to 2"

CURB AND GUTTER Type 2 (6" Mountable - 1' Gutter) (Section IM)

(R-1)

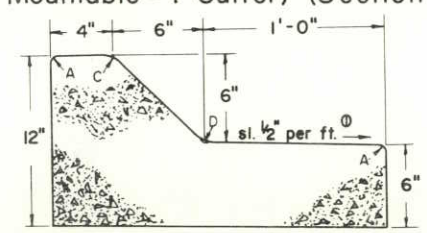

① Slope in opposite direction when required to fit field conditions.

(R-1) CURB AND GUTTER Type 2 (6" Barrier - 2' Gutter) (Section IIB)

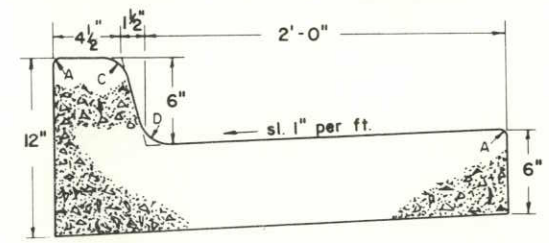

(R-1) CURB AND GUTTER Type 2 (6" Mountable - 2' Gutter) (Section IIM)

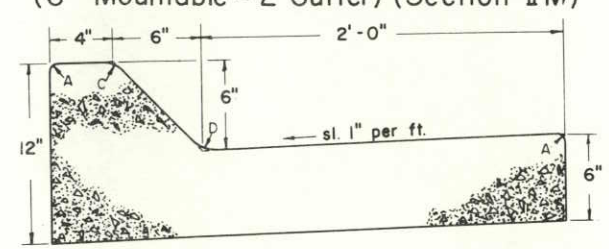

CURB AND GUTTER (Type 2) (4" Mountable with Sidewalk) (Section MS)

(R-1)

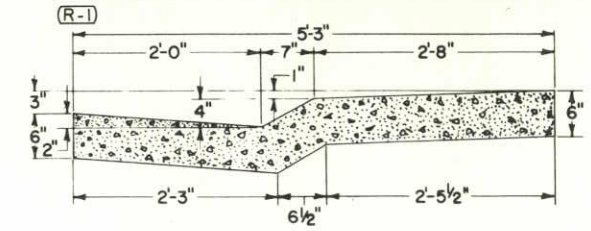

SIDEWALK EXPANSION JOINT

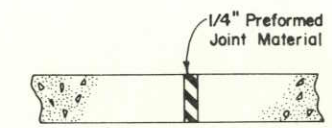

(R-5)

GENERAL NOTES

All work shall be done in accordance with the Standard Specifications applicable to the project.

On Curves 3 degrees and sharper, Curbs and/or Gutters are to be placed on the Arc of the Curve unless otherwise noted on plans. A maximum chord length of 10 feet may be used when the degree of curve is less than 3 degrees.

Expansion joints shall be installed between concrete curb and any fixed structure, sidewalk or bridge. Expansion joint material shall be ½" thick and shall extend the full depth of contact surface.

Concrete shall be Class A, B or D.

(R-3)

DEPARTMENT OF HIGHWAYS
STATE OF COLORADO
DIVISION OF HIGHWAYS

CURBS AND GUTTERS

Designed by RW	Approved by L. E. Olson
Made by RW	Staff Design Engr.
Checked by C.R.S.	Date: July 1, 1965

STANDARD M-612-A

(JULY 1, 1965)

FEDERAL ROAD REG. NO.	DIVISION	PROJECT NO.	SHEET NO.
9	COLORADO		

REVISIONS			
R-1	5-2-66	R.O.W. Marker Note	M.R.H.
R-2	7-24-68	Dept. Name	M.R.H.
R-3	5-7-71	Add note on concrete	M.R.H.
R-4	6-30-71	Bronze Tab. dims. Rev. all Dept. to Div.	M.R.H.

RIGHT OF WAY MARKER POST

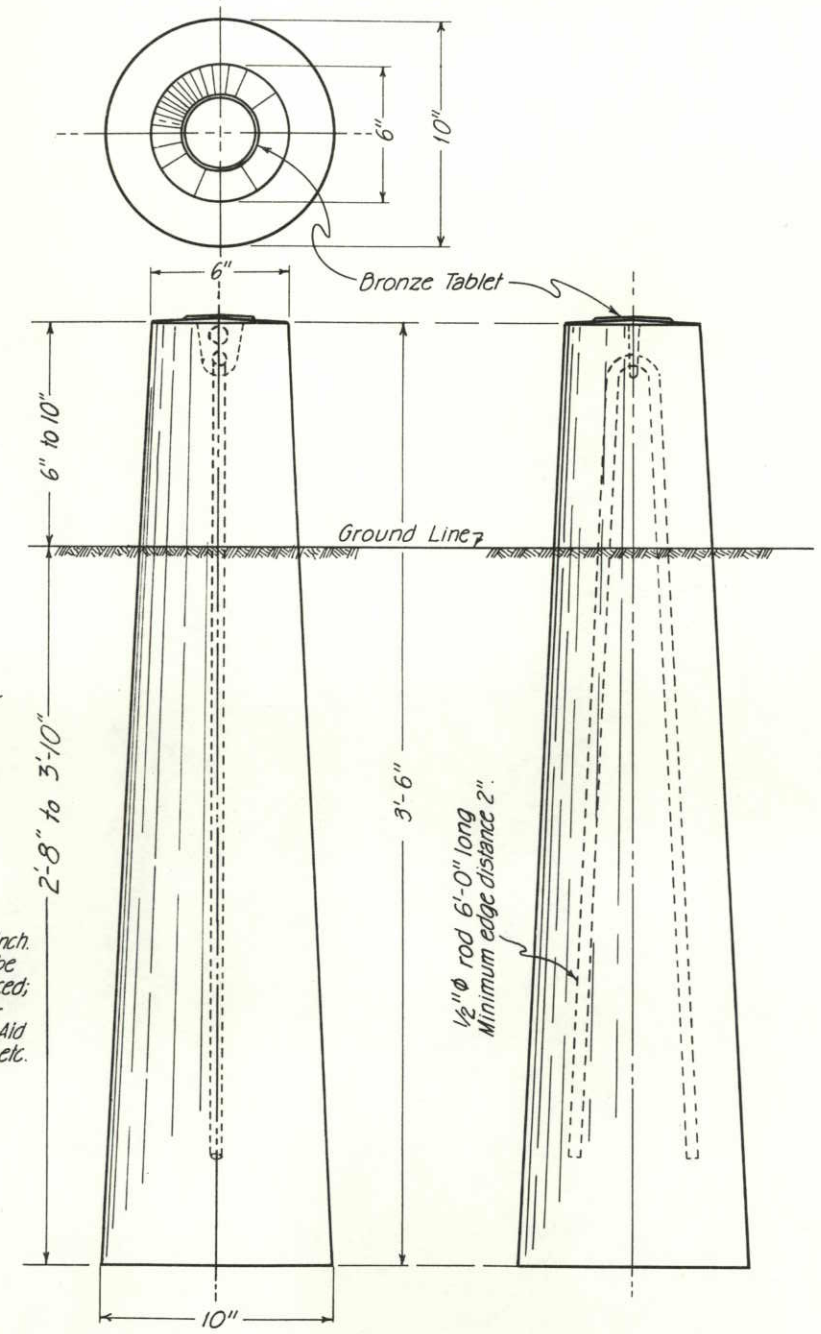

NOTES FOR R.O.W. MARKER POSTS

All work shall be done in accordance with the Standard Specifications applicable to the project.

(R-3) Posts shall be Class A, B or D concrete. The upper 12 inches of marker posts shall be rubbed free of form marks, and the top surface of the post must be constructed to drain thoroughly.

(R-1) Light weight aggregate conforming to ASTM C 330 will be allowed.

All exposed surfaces of the bronze tablet are to be ground to a smooth surface. All letters are to be depressed a minimum of 1/16 inch. Information on the bronze tablet indicated by pin lines is to be stamped in field by the engineering party after post is placed; 3/16 inch letters and figures to be used. Project designations on tablets shall be properly shown (i.e.; I for Fed. Aid Interstate; F for Fed. Aid Primary; S for Fed. Aid Secondary, etc. & C for State Projects, see detail below.)

BENCH MARK

All work shall be done in accordance with Standard Specifications applicable to the project.

All exposed surfaces of the bronze tablet are to be ground to a smooth surface. All letters are to be depressed a minimum of 1/16 inch. Information on the bronze tablet indicated by pin lines is to be stamped in field by the engineering party after marker is placed. 3/16 inch letters and figures to be used. Project designation on tablets shall be properly shown (i.e.; I for Fed. Aid Interstate, F for Fed. Aid Primary, S for Fed. Aid Secondary, etc. & C for State Projects. See details below).

(R-4) Bronze Bench Mark Tablets will be furnished by the Division at no expense to the Contractor.

Installation of Bronze Bench Mark Tablets will not be paid for directly, but shall be included in the price bid for Concrete

Note: Where 2'-0" safety curbs are not used place marker in center of curb.

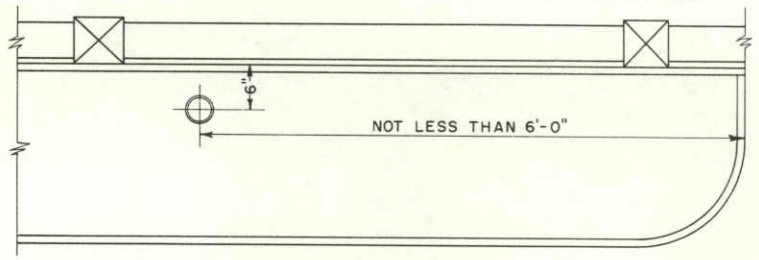

PLAN

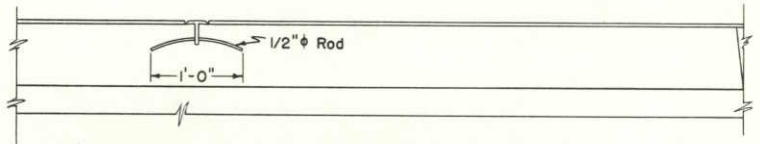

ELEVATION

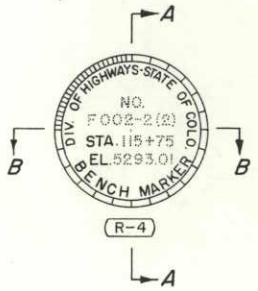

One marker to be placed on Bridges as shown. The station shown on marker shall be the centerline stationing directly opposite the marker.

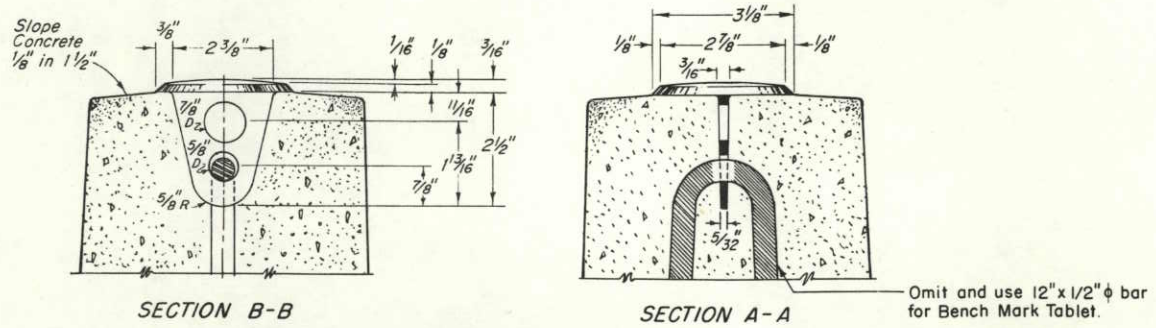

SECTION B-B

SECTION A-A

DETAIL OF BRONZE TABLET (R-4)
FOR RIGHT OF WAY MARKER POST AND BENCH MARK

(R-2)

DEPARTMENT OF HIGHWAYS
STATE OF COLORADO
DIVISION OF HIGHWAYS

MARKER POSTS AND BENCH MARKS

Designed by R.E.L.	Approved by L. E. Olson
Made by E.E.O.	Staff Design Engr.
Checked by R.E.L.	Date: July 1, 1965

HIGHWAY LIGHTING

STANDARD M-613-AA

(APRIL 7, 1967)

FEDERAL ROAD REGION NO.	DIVISION	PROJ. NO.	SHEET NO.	TOTAL SHEETS
9	COLORADO			

TYPICAL (R-1) (R-2) DETAIL OF TRANSFORMER BASES

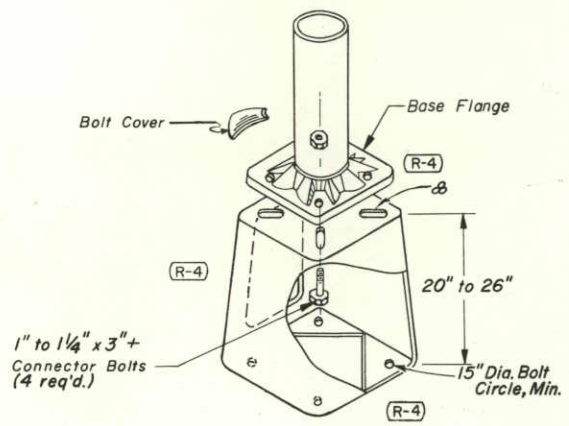

NOTES FOR TRANSFORMER BASES (R-5)

Transformer base to be mounted on concrete foundation pad shown below.

Anchor bolts shall be secured and shall terminate above the top of foundation pad as recommended by the manufacturer. (R-3) Anchor bolts shall not project through the transformer base.

(R-4) ⌀ Minimum Bolt Circle for top of Transformer Base:

Aluminum Poles { 40' M.H. = 13½" ; 30' M.H. = 10"

Steel Poles { 40' M.H. = 12" ; 30' M.H. = 10½"

TYPICAL ARMS (R-5)

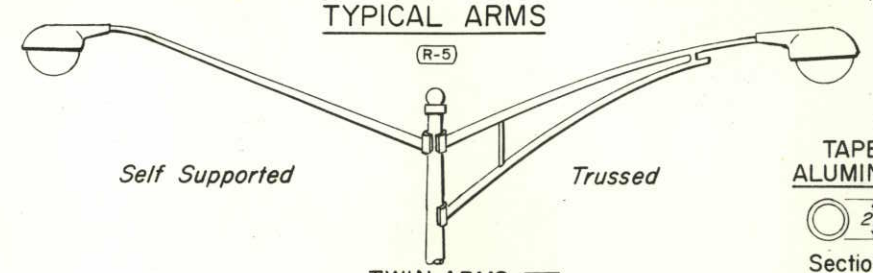

TWIN ARMS (R-5)

(R-5) TAPER FOR ALUMINUM ARM

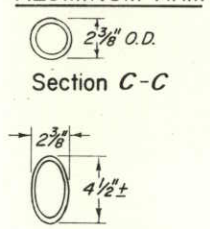

Section C-C

Section B-B

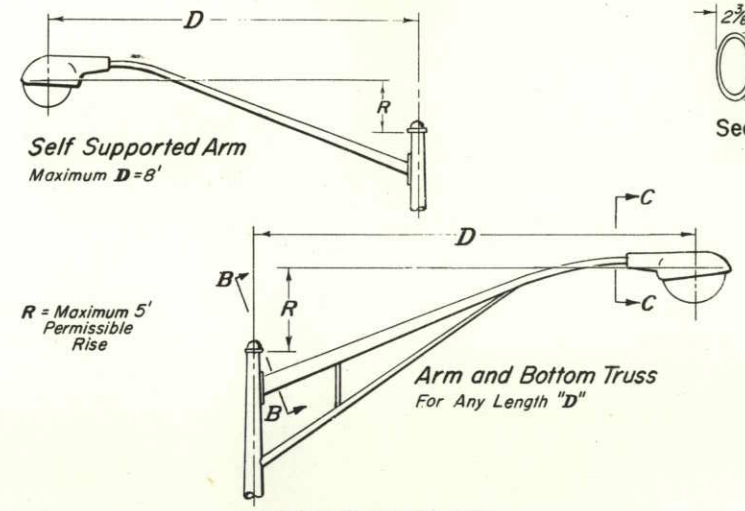

SINGLE ARMS (R-5)

TYPICAL HIGHWAY LIGHT STANDARD

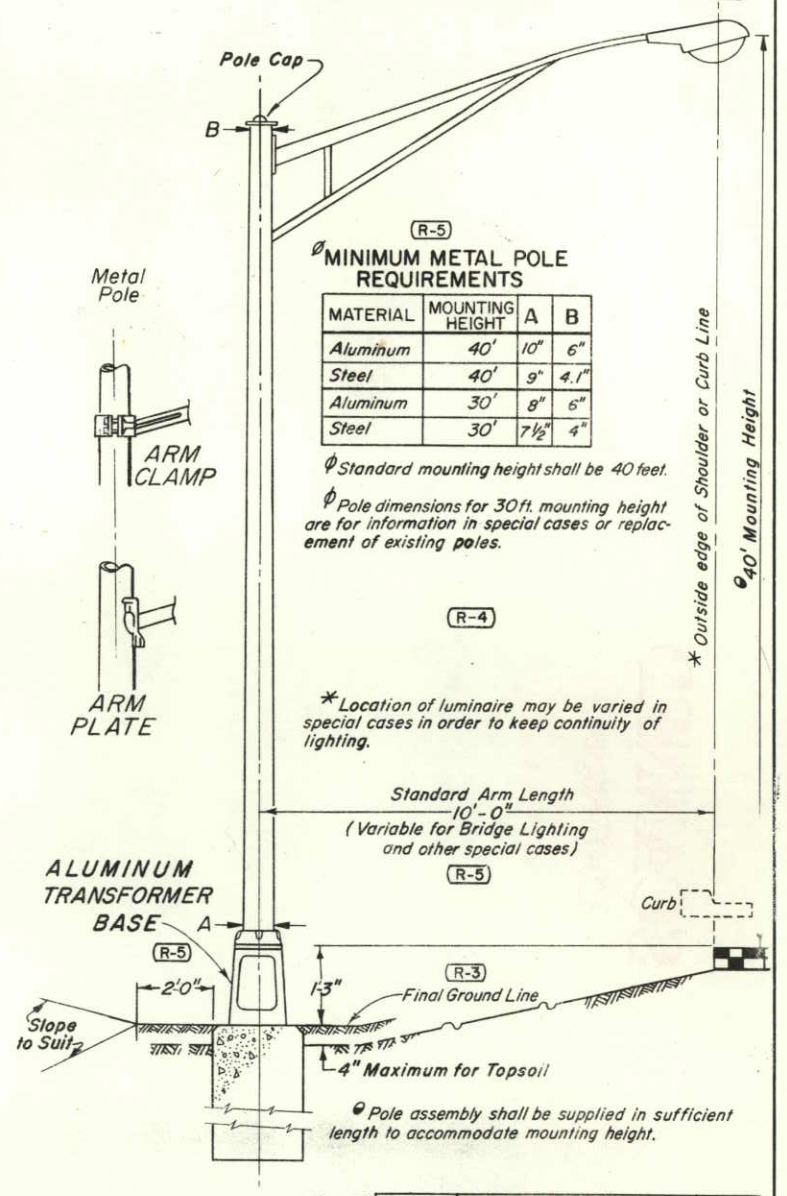

(R-5) ⌀ MINIMUM METAL POLE REQUIREMENTS

MATERIAL	MOUNTING HEIGHT	A	B
Aluminum	40'	10"	6"
Steel	40'	9"	4.1"
Aluminum	30'	8"	6"
Steel	30'	7½"	4"

⌀ Standard mounting height shall be 40 feet.

⌀ Pole dimensions for 30 ft. mounting height are for information in special cases or replacement of existing poles.

(R-4)

* Location of luminaire may be varied in special cases in order to keep continuity of lighting.

@ Pole assembly shall be supplied in sufficient length to accommodate mounting height.

TYPICAL CONCRETE FOUNDATION PAD (R-6)

SECTION THRU ELEVATION VIEW

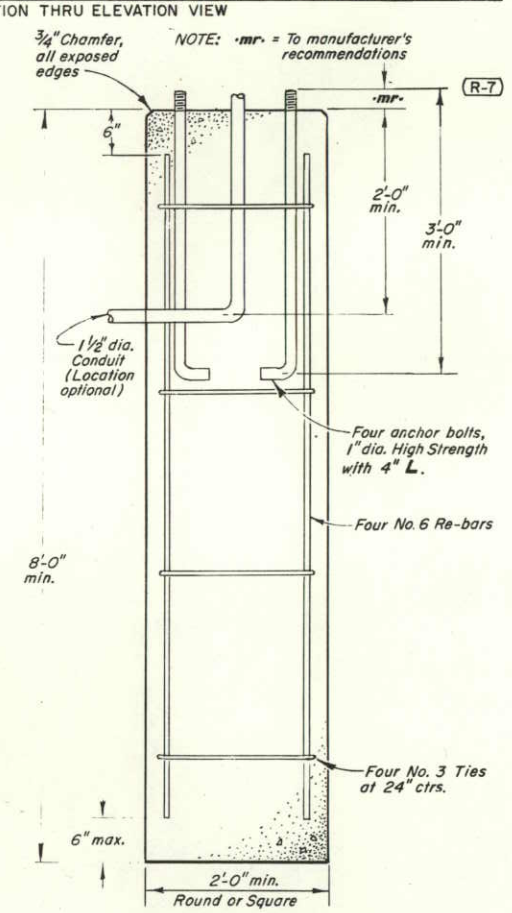

NOTE: Dimensions for transformer base, base flange, anchor bolts, bolt circle diameters are variable.

All components shall fit and shall accommodate the requirements of the light standard supplied.

Foundation pad depth is based on average compacted or undisturbed soils. Resisting moment of foundation pad and frangible base shall be equal to or greater than load test requirements of the light standard.

(R-3) TYPICAL WALL TYPE LUMINAIRE FOR UNDERPASS LIGHTING

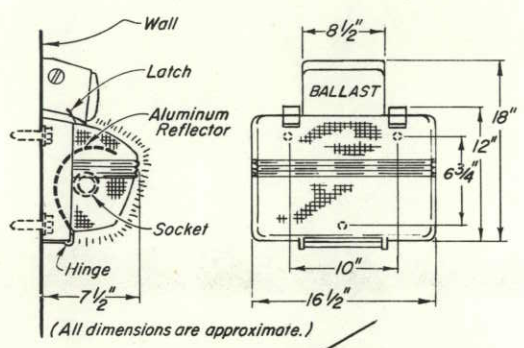

(All dimensions are approximate.)

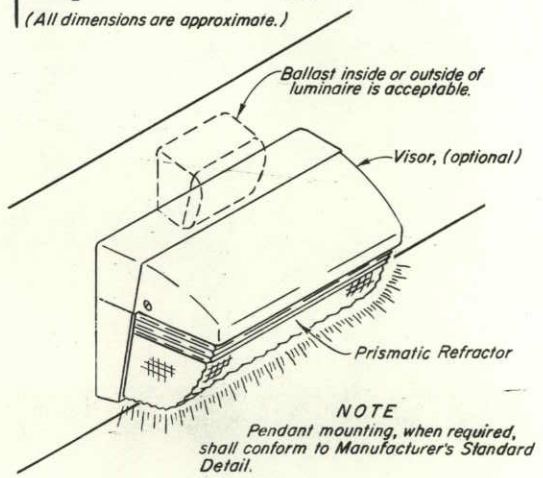

NOTE

Pendant mounting, when required, shall conform to Manufacturer's Standard Detail.

CONCRETE PULL BOX (R-3)

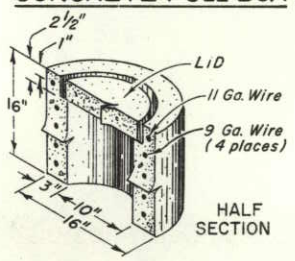

HALF SECTION

(R-7) General Notes:

All work shall be done in accordance with the Standard Specifications applicable to the project.

When island or cut slope recess is required for Light Standard installation, the cost of excavation or embankment will be included in the work. Embankment shall be compacted in accordance with Section 203.

The physical shapes of pole caps, brackets, concrete pull boxes are to be considered approximate as shown.

Concrete shall be Class A, B or D.

	REVISIONS:		
(R-1)	7-19-67	Typical Arms	M.R.H.
(R-2)	6-12-68	Delete Shoe Base	M.R.H.
(R-3)	2-10-69	Found., Wall Lum., Steel & G. Notes	M.R.H.
(R-4)	6-20-69	Bolt circles - Pole table - G. notes	M.R.H.
(R-5)	9-16-70	Delete Wood, add Twin, Notes	M.R.H.

	REVISIONS CONTINUED		
(R-6)	3-10-71	Concrete Foundation Pad	M.R.H.
(R-7)	4-9-71	Conc. Class Gen. Note. Anch. bolt dim.	M.R.H.

(R-2)

DEPARTMENT OF HIGHWAYS
STATE OF COLORADO
DIVISION OF HIGHWAYS

HIGHWAY LIGHTING

Designed by M.R.H.
Made by J.R.B.
Checked by R.S.M.

Approved by [signature]
Staff Design Engineer
Date: APRIL 7, 1967

DEPARTMENT OF HIGHWAYS—STATE OF COLORADO
FORM D. O. H. 126
MARCH 1964

STANDARD M-614-TB

(SHEET 1 OF 3 SHEETS)

(JULY 1, 1965)

FEDERAL ROAD REGION NO.	DIVISION	PROJECT NO.	SHEET NO.
9	COLORADO		

REVISIONS			
R-1	7-12-67	Note 23	G.W.F.
R-2	7-8-68	Rev. Break-away, Placement,	
		Code Nos, & Dept. Name	G.W.F.
R-3	12-24-68	Rev. U.S. Shields	J.L.S.
R-4	11-22-71	Rev. Signs & Code Nos	J.J.S.

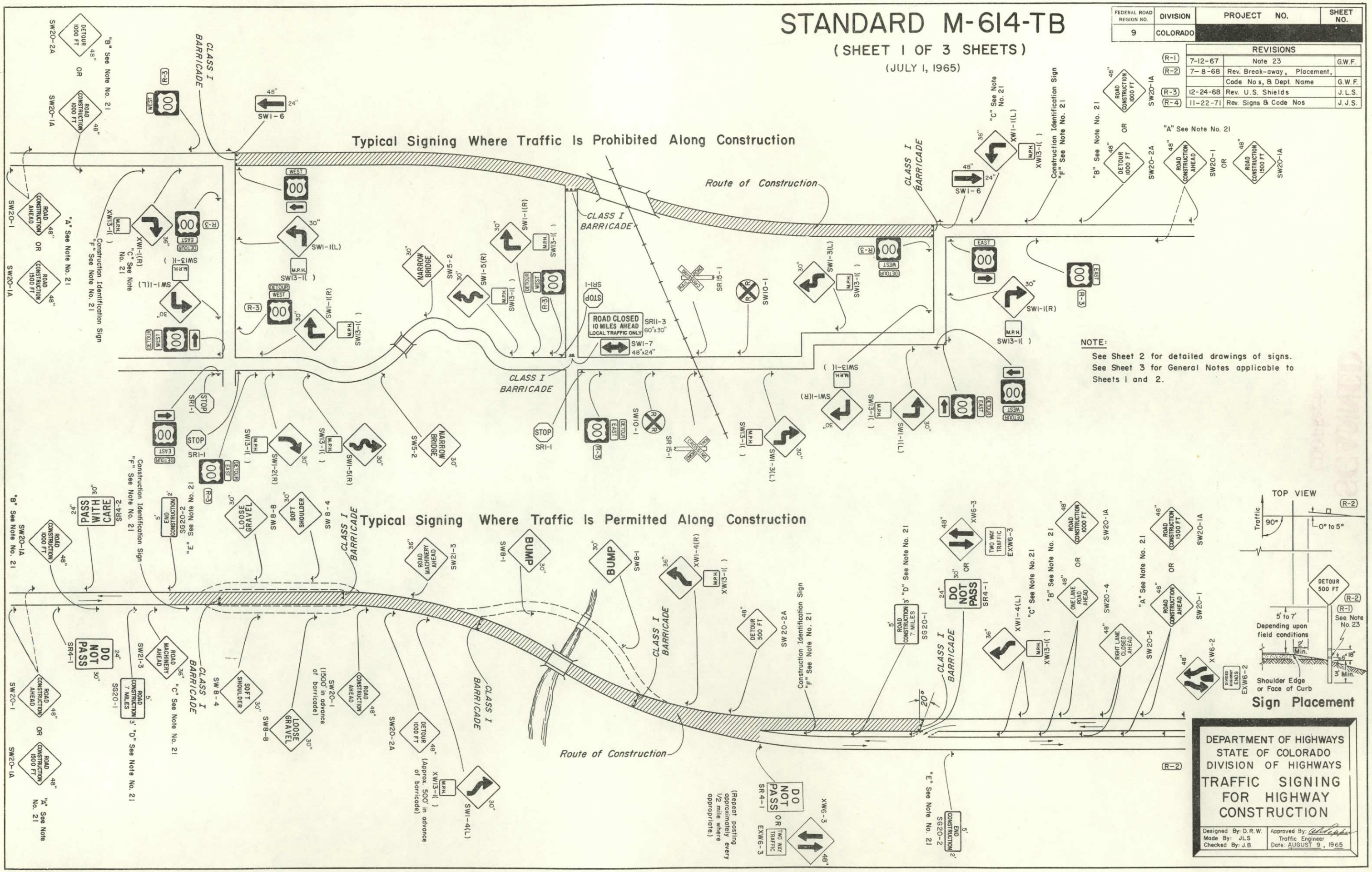

DEPARTMENT OF HIGHWAYS—STATE OF COLORADO
FORM D. O. H. 126
MARCH 1964

STANDARD M-614-TB

(SHEET 2 OF 3 SHEETS)

(JULY 1, 1965)

FEDERAL ROAD REGION NO.	DIVISION	PROJECT NO.	SHEET NO.
9	COLORADO	[redacted]	

REVISIONS			
R-1	7-12-67		M.R.H.
R-2	7-8-68	Rev. Code No. & Dept. Name	G.W.F.
R-3	12-24-68	Added Notes	J.L.S.
R-4	11-22-71	Rev. Signs & Code Nos.	J.J.S.

WARNING SIGNS
See Note No. 10

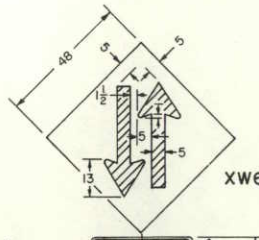

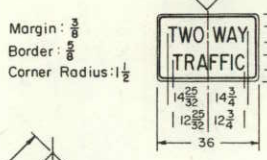

REGULATORY SIGNS
See Note No. 9

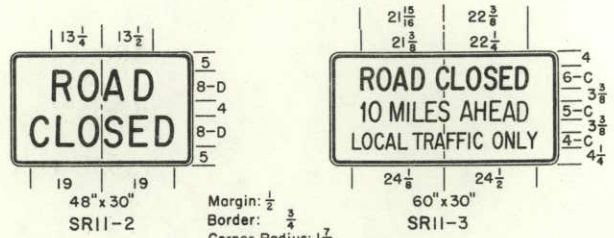

WARNING SIGNS
See Note No. 10

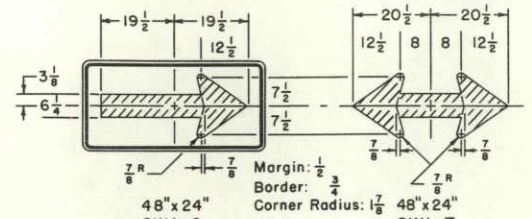

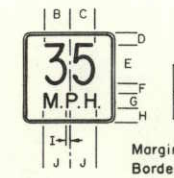

	Panel	A	B	C	D	E	F	G	H	I	J
SW13-1	18"x18"	3/8	5 1/2	5 5/16	2 1/4	8-C	2	3-E	2 3/4	3/4	5 3/16
XW13-1	24"x24"	5/8	6 5/8	6 9/16	3 1/4	10-C	2 3/4	4-E	4	15/16	6 7/8

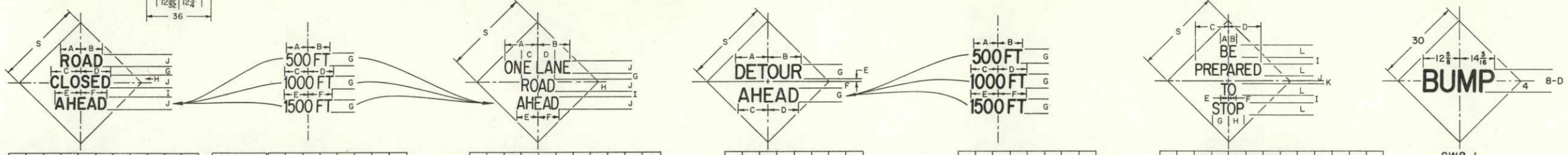

	S	A	B	C	D	E	F	G	H	I	J
SW20-3	48	11 1/4	12 1/16	16 9/16	16 9/16	14 5/8	14 5/8	4 3/4	4 7/16	5 7/16	7-D
CW20-3	36	8 1/16	8 5/8	11 13/16	11 7/8	10 1/2	10 1/2	3 3/8	3 1/4	3 3/4	5-D

	S	A	B	C	D	E	F	G
SW20-3A	48	12	12 1/16	13 1/4	14 1/8	13 1/4	13 5/8	7-C
SW20-4A	36	8 9/16	8 5/8	9 3/8	10 1/8	9 1/2	9 3/4	5-C
CW20-3A								
CW20-4A								

	S	A	B	C	D	E	F	G	H	I	J
SW20-4	48	18 1/2	17 7/8	9 3/8	9 3/8	11 7/8	11 7/8	3 1/4	5 1/4	3 1/8	7-C
CW20-4	36	13 3/16	12 3/4	6 9/16	6 1/2	8 1/2	8 1/2	2 1/4	3 3/4	2 1/4	5-C

	S	A	B	C	D	E	F	G
SW20-2	48	18 5/8	18 5/16	16 3/4	16 3/4	1 1/4	3 1/2	8-D
CW20-2	36	13 5/8	13 3/4	12 9/16	12 9/16	15/16	2 5/8	6-D

	S	A	B	C	D	E	F	G
SW20-2A	48	13 3/4	13 3/4	15	16 3/16	15 1/8	15 3/16	8-C
CW20-2A	36	10 5/16	10 5/16	11 1/4	12 1/8	11 3/8	11 11/16	6-C

	S	A	B	C	D	E	F	G	H	I	J	K	L
SW20-6	36	2 15/16	3 3/64	13 17/32	13 49/64	2 31/32	2 61/64	6 11/32	6 61/64	3	2	1	5-C

	S	A	B	C	D	E	F	G	H	I	J
SW20-5(R)	48	18 3/8	18 7/16	11 3/4	11 3/4	10 1/4	10 1/4	2 7/8	7/16	3 5/16	6-C
CW20-5(R)	36	15 3/16	15 3/8	9 1/8	9 13/16	8 9/16	8 9/16	2 3/8	3/8	2 3/4	5-C

	S	A	B	C	D	E	F	G
SW20-5A(R)	48	10 5/8	10 3/8	11 1/4	12 1/8	11 3/8	11 11/16	6-C
SW20-5A(L)	36	8 3/8	8 5/8	9 3/8	10 1/8	9 1/2	9 3/4	5-C
CW20-5A(R)								
CW20-5A(L)								

	S	A	B	C	D	E	F	G	H	I	J
SW20-5(L)	48	17 1/8	17 1/8	11 3/4	11 3/4	10 1/4	10 1/4	2 7/8	7/16	3 5/16	6-C
CW20-5(L)	36	14 1/4	14 1/4	9 13/16	9 13/16	8 3/16	8 9/16	2 3/8	3/8	2 3/4	5-C

	S	A	B	C	D	E	F	G
SW20-1A	48	12	12 1/16	13 1/4	14 1/8	13 1/4	13 5/8	7-C
CW20-1A	36	8 5/16	8 5/8	9 3/8	10 1/8	9 1/2	9 3/4	5-C

	S	A	B	C	D	E	F	G	H	I	J
SW20-1	48	9	9 3/8	26	25 9/16	11 7/8	11 7/8	4 13/16	3 1/2	4 13/16	7-C
CW20-1	36	6 3/4	6 7/8	19	18 1/2	8 1/2	8 1/2	3 3/4	2 1/2	3 3/4	5-C

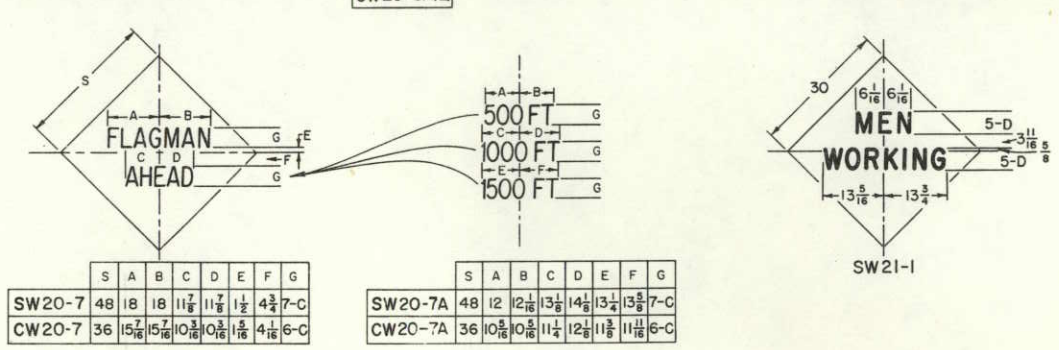

	S	A	B	C	D	E	F	G
SW20-7	48	18	18	11 7/8	11 7/8	11 1/2	4 3/4	7-C
CW20-7	36	15 7/16	15 7/16	10 3/16	10 3/16	9 7/8	4 1/16	6-C

	S	A	B	C	D	E	F	G
SW20-7A	48	12	12 1/16	13 1/4	14 1/8	13 1/4	13 5/8	7-C
CW20-7A	36	10 5/16	10 5/16	11 1/4	12 1/8	11 3/8	11 11/16	6-C

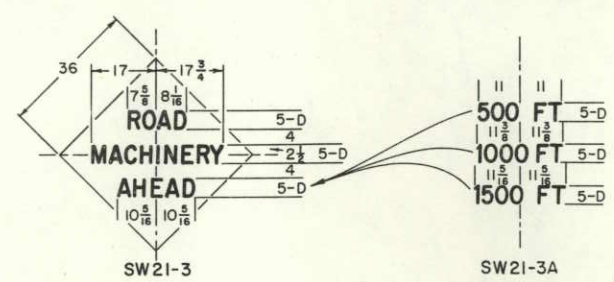

PLATE DETAILS

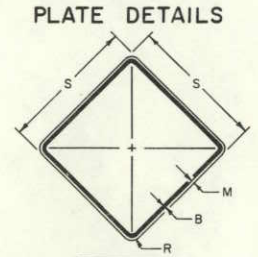

S	M	B	R
30	1/2	3/4	1 7/8
36	3/8	7/8	2 1/4
48	3/4	1 1/4	3

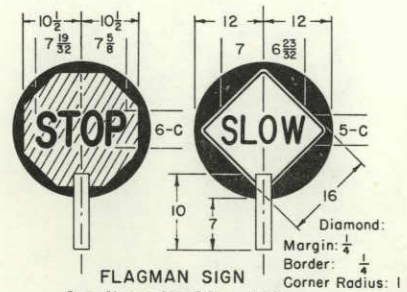

FLAGMAN SIGN
See Notes No. 20 and 22

NOTES:

SEE SHEET 1 FOR TYPICAL SIGNING AND SIGN PLACEMENT. SEE SHEET 3 FOR GENERAL NOTES APPLICABLE TO SHEETS 1 AND 2.

ALL DIMENSIONS THAT ARE NOT LABELED ARE IN INCHES.

GUIDE SIGNS
See Note No. 11

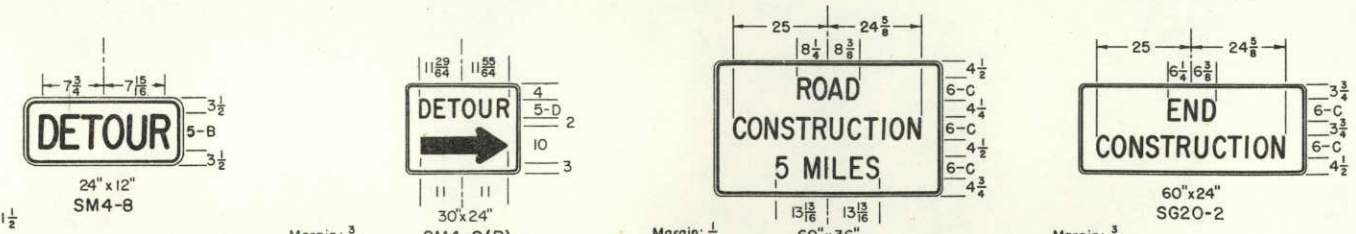

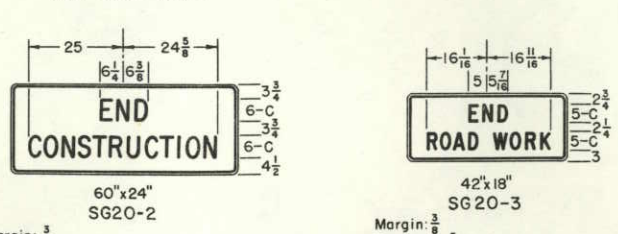

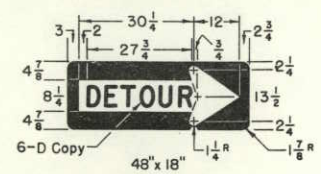

R-3 Reverse Dimensions for Left Designation

R-2

DEPARTMENT OF HIGHWAYS
STATE OF COLORADO
DIVISION OF HIGHWAYS

TRAFFIC SIGNING FOR HIGHWAY CONSTRUCTION

Designed By: D.R.W.
Made By: H.B.D.
Checked By: J.B.

Approved By: [signature]
Traffic Engineer
Date: AUGUST 9, 1965

DEPARTMENT OF HIGHWAYS—STATE OF COLORADO
FORM D. O. H. 126
MARCH 1964

FEDERAL ROAD REGION NO.	DIVISION	PROJECT NO.	SHEET NO.
9	COLORADO		

STANDARD M-614-TB

(SHEET 3 OF 3 SHEETS)

(JULY 1, 1965)

	REVISIONS		
R-1	7-12-67	Added Note 23	G.W.F.
R-2	7-8-68	Rev. Note 23 & Dept. Name –	
		Deleted Note	G.W.F.
R-3	12-24-68	Rev. Note No. 18	J.L.S.
R-4	11-22-71	Rev. Notes	J.J.S.

GENERAL NOTES

R-4 1. All work shall be done in accordance with: (a) the Standard Specifications applicable to the Project, and (b) the "Manual on Uniform Traffic Control Devices for all Classes of Streets and Highways" published by the U.S. Department of Transportation, Federal Highway Administration, and the related Colorado Supplement.

2. Where traffic is maintained through or over any part of the Project the Contractor will be required to mark all hazards within the limits of the Project (including connecting roads) with well-maintained Barricades, Warning, and Guide Signs. All Barricades and Signs shall be moved, added to, changed or removed as required during the progress of construction and removed entirely when the Project is completed.

R-4 3. Where traffic is prohibited from the Project the Detour will be marked by the Division except that the Contractor shall provide, erect and maintain Barricades, complete, (when required) at the ends of the Project, ends of the Detour and connecting roads. All U.S. or State Route Markers required for the Project will be furnished and installed by the Division. The location and positioning of Warning Signs, Barricades, and Regulatory Signs shall be as recommended by the appropriate District Engineering Forces of the Division.

4. Work on the Project shall not be started until all required signs are in place and approved by the Engineer. Where speed control appears necessary such speed control shall be requested from the Engineer by the Contractor. Control of speed through a construction zone may be achieved by Advisory Speed plates in conjunction with Warning Signs (SW13-1 for use with 30" Warning Signs and XW13-1 for use with 36" and 48" Warning Signs). The Advisory Speed plate is to be posted only at those locations where the safe speed is lower than the imposed Regulatory speed limit.

5. All Signs and Barricades shall be placed for best visibility and legibility, maintained in good condition and kept clean and free of dirt at all times. Contractor's and Engineer's vehicles and equipment must be parked so that signs and barricades are visible to approaching traffic at all times.

6. Where two identical signs are used for dual posting they are to be staggered on the two sides of the roadway for a minimum distance of 75' to avoid a tunneling effect.

7. Examples for marking Projects, as shown on Sheet 1, are typical of signs required and are subject to alteration to fit actual conditions encountered in the field. Locations for control devices are to be staked by the Engineer. In all cases Warning signs are to be placed well in advance of the hazard, the distance depending on topography and existing approach speeds. Additional markings and any special signs required for the guidance and protection of traffic will be placed as required on the Project at the Contractor's expense.

R-4 8. Desirable sizes for signs are shown on Sheet 1 of this Standard. Larger or smaller signs shall be used where warranted. Detailed dimensions for signs normally used in connection with construction are shown on Sheet 2 of this Standard. For information on standard roadway signs not detailed on this Standard see the "Manual on Uniform Traffic Control Devices for all Classes of Streets and Highways" published by the U.S. Department of Transportation, Federal Highway Administration, and the related Colorado Supplement.

9. Signs with the prefix "R" in the sign code are Regulatory signs and as such impose legal compulsions or restrictions on drivers and should only be used as authorized by the Engineer.

10. Signs with the prefix "W" in the sign code are Warning signs and are used to alert traffic to existing or potentially hazardous conditions.

11. Signs with the prefix "D" or "M" in the sign code are Guide signs. Those with the prefix "D" convey general information and those with the prefix "M" are used for marking the traffic route.

R-4 12. All signs shall be reflectorized unless otherwise specified on plans. Regulatory signs (unless otherwise specified) shall have a screen processed black legend and border on a white flexible reflective sheeting, non-exposed lens background. The back side of Regulatory and Guide signs shall be painted with two coats of "Exterior Sign White Paint." Warning signs shall have a screen processed black legend and border on an orange flexible reflective sheeting, non-exposed lens background. The back side of Warning signs shall be painted with two coats of exterior sign white. Guide signs shall have a black message on an orange background.

13. Painting for wood surfaces shall conform with Section 508 of the Standard Specifications.

14. Posts for regulatory, warning, and guide signs will normally be 4" x 4" or 6" x 6" and shall conform to the Standard Specifications for Untreated Timber-S4S. Timber shall conform to Construction grade Paragraph 123B or 125B of Standard No. 15 Grading & Dressing Rules for West Coast Douglas Fir (1956) or Dense Structural 58 and LL Structural 58 Paragraph 284 or 285 of 1956 Grading Rules for Southern Pine. Posts shall be painted with one coat of "White Wood Primer" and one coat of "Outside White Paint."

15. Sign panels furnished by the Contractor for use only during construction may be fabricated from plywood, aluminum, steel or other suitable material but shall be stable and durable enough to meet other requirements of this Standard.

16. All material shall be sound and durable. Barricades, signs, symbols, and lettering shall be of good workmanship. Uneven lettering will not be accepted.

R-4 17. Alternate methods of processing signs or the substitution of symbols or other reflecting elements for painted symbols will be permitted only after approval by the Division.

R-3 R-4 18. Lanterns and Torches – Lanterns, shall be used only in low speed urban areas. Open-flame torches shall not be used under any circumstances.

R-4 19. Barricades, Flashing Beacons and Flashers – Refer to appropriate Division Standard Drawings (Timber Barricades) for details.

20. Flagman Sign – This sign shall have a black painted background on both sides to form a contrast for the octagonal Stop sign and the diamond Warning sign. The "STOP" sign shall be fabricated by reverse screen process using transparent red paint on smooth surface silver reflective sheeting. The "SLOW" side of the Flagman Sign shall be black process paint on smooth surface orange reflective sheeting. Handle to be grooved on one side to indicate reading of sign to Flagman.

R-4 21. Sign "A": This is the first advance warning sign and shall be placed 1,500 feet ahead of Barricade or project terminal. Postings are required on both sides of the roadway on divided highways. Dual posting is required where warranted on two-lane, two-way highways.
Sign "B": This is the second advance warning sign and shall be placed 1,000 feet ahead of barricade or project terminal. Postings are required on both sides of the roadway on divided highways and singly on two-lane, two-way highways.
Sign "C": This is the third advance warning sign in cases where barricades are used and shall be placed 500 to 750 feet ahead of barricade or potentially hazardous condition. Postings are required on both sides of the roadway on divided highways and singly on two-lane, two-way highways.
Sign "D": SG20-1 This sign shall be placed to mark the beginning of a Project of more than 2 miles in extent, where traffic is maintained through the project. It shall be placed singly and near the beginning of construction.
Sign "E": SG20-2 This sign shall be placed to mark the end of the Project. It shall be placed singly and may be placed opposite barricade if desirable.
Sign "F": Construction identification signs shall be furnished and installed by the Division on all Federal-Aid and Forest Highway Projects where actual construction is in progress and visible to highway users. These signs should be located so as not to obscure or detract from the effectiveness of other official signs. Where two or more projects are contiguous the appropriate data may be included in one set of signs. Refer to appropriate Division Standard Drawings (Identification Signs) for sign details.
Signs A through F shall be furnished, installed and maintained by the Division.

22. When Flags are used in lieu of the Flagman Sign, they shall be a minimum of 18"x18", made of a good grade of bright red material, and fastened securely to a staff of approximately 3 foot length. The free edge should be weighted to insure that the flag will hang vertically, even in heavy winds.

R-1 R-2 23. Each 6"x6" timber sign post shall be provided with two 2" diameter holes through the neutral axis normal to the roadway, one hole at 6" and one hole at 18" above the ground level. The 4"x4" timber posts shall not be provided with any type of break-away device. The inside portion of each 2" diameter hole shall be painted white. The underground portion of each timber post shall be treated with creosote.

R-2

R-2

DEPARTMENT OF HIGHWAYS
STATE OF COLORADO
DIVISION OF HIGHWAYS

TRAFFIC SIGNING FOR HIGHWAY CONSTRUCTION

Designed By: D.R.W. Made By: J.L.S. Checked By: J.B.	Approved By: [signature] Traffic Engineer Date: AUGUST 9, 1965

STANDARD S-612-51A (R-1)

(SHEET 1 OF 2 SHEETS)

SEPTEMBER 29, 1972

FEDERAL ROAD REGION NO.	DIVISION	PROJ. NO.	SHEET NO.	TOTAL SHEETS
VIII	COLORADO			

REVISIONS			
(R-1)	10-26-72	Rev. Std. No., Notes & Red Usage	J.D.S.

TYPICAL INSTALLATION FOR DIAMOND INTERCHANGE

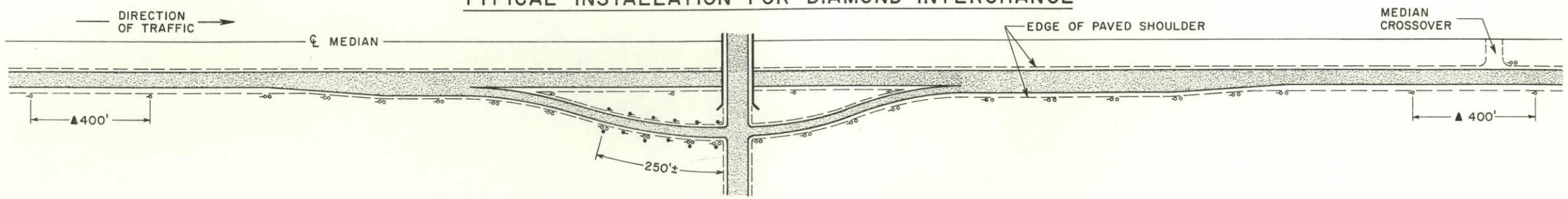

TYPICAL INSTALLATION FOR CLOVERLEAF INTERCHANGE

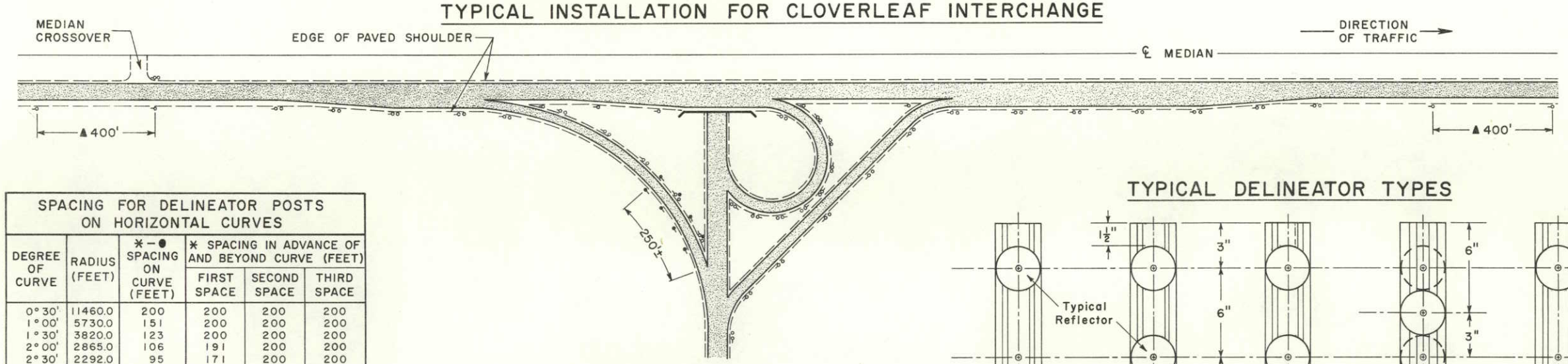

PLAN LEGEND

- TYPE I DELINEATORS
- TYPE II DELINEATORS
- TYPE III DELINEATORS
- TYPE IV DELINEATORS
- TYPE V DELINEATORS
- (R-1) ▲ EXPRESSWAY SPACING (Delineators will not be required on tangents of Conventional and Frontage roadways.)

SPACING FOR DELINEATOR POSTS ON HORIZONTAL CURVES

DEGREE OF CURVE	RADIUS (FEET)	*-● SPACING ON CURVE (FEET)	* SPACING IN ADVANCE OF AND BEYOND CURVE (FEET)		
			FIRST SPACE	SECOND SPACE	THIRD SPACE
0°30'	11460.0	200	200	200	200
1°00'	5730.0	151	200	200	200
1°30'	3820.0	123	200	200	200
2°00'	2865.0	106	191	200	200
2°30'	2292.0	95	171	200	200
3°00'	1910.0	86	155	200	200
3°30'	1637.1	80	144	200	200
4°00'	1432.5	74	133	200	200
4°30'	1273.3	70	126	200	200
5°00'	1146.0	66	119	198	200
5°30'	1041.8	63	113	189	200
6°00'	955.0	60	108	180	200
6°30'	881.5	58	104	174	200
7°00'	818.6	55	99	165	200
7°30'	764.0	53	95	159	200
8°00'	716.3	52	94	156	200
8°30'	674.1	50	90	150	200
9°00'	636.7	48	86	144	200
9°30'	603.2	47	85	141	200
10°00'	573.0	46	83	138	200
10°30'	545.7	45	81	135	200
11°00'	520.9	43	77	129	200
11°30'	498.3	42	76	126	200
12°00'	477.5	41	74	123	200
15°00'	382.0	36	65	108	200
18°00'	318.3	33	59	99	198
21°00'	272.9	30	54	90	180
25°00'	229.2	27	49	81	162
30°00'	191.0	24	43	72	144

(R-1) * OMIT THIRD SPACE ON PRIMARY AND SECONDARY ROUTES AND DOUBLE THE DISTANCE ON THE CURVE AND IN ADVANCE OF AND BEYOND THE CURVE. FOR CURVES LESS THAN 2 DEGREES ON EXPRESSWAY THROUGH ROADWAYS USE EXPRESSWAY TANGENT SPACING.

● $S = 2\sqrt{R-50}$ (NO SPACES TO EXCEED 200 FEET)

FIRST SPACE = 1.8 S
SECOND SPACE = 3 S
THIRD SPACE = 6 S

GENERAL NOTES

1. All work shall be done in accordance with the Standard Specifications applicable to the Project.
2. See the Tabulation in the Plans for delineator requirements.
3. Spacing between posts on acceleration and deceleration lanes and on relatively straight portions of interchange ramps shall be 100' on Interstate and 200' on Primary and Secondary projects. Spacing between posts on the outside of interchange ramp curves shall be as indicated in the table with a 24' minimum. Post spacing in advance of and beyond the curve shall not apply to ramp curves.
4. When guard rail is present, place delineators outside and at a height that permits an unobstructed view of all reflectors.
5. ■ Delineators are not to be placed beyond tangent points of reversing curves for median transitions. (See Sheet 2)
6. Delineators may be placed on the median side of a roadway when the Engineer determines that a location is hazardous and/or that each side can be treated as an independent roadway due to horizontal or vertical separation.
7. When normal delineator spacing falls on an intersecting roadway it may be moved either direction a distance not to exceed 1/4 of the normal space.
8. Type, location and spacing of delineators for tunnels and snow sheds shall be as directed by the Engineer.
9. Frontage road delineators are not to be installed where they might be misleading to mainline traffic.
10. Install face of delineator at 90 degrees to centerline of the roadway.
11. The color of delineator posts shall be Interstate Green.

(R-1) General Notes continued on Sheet 2.

TYPICAL DELINEATOR TYPES

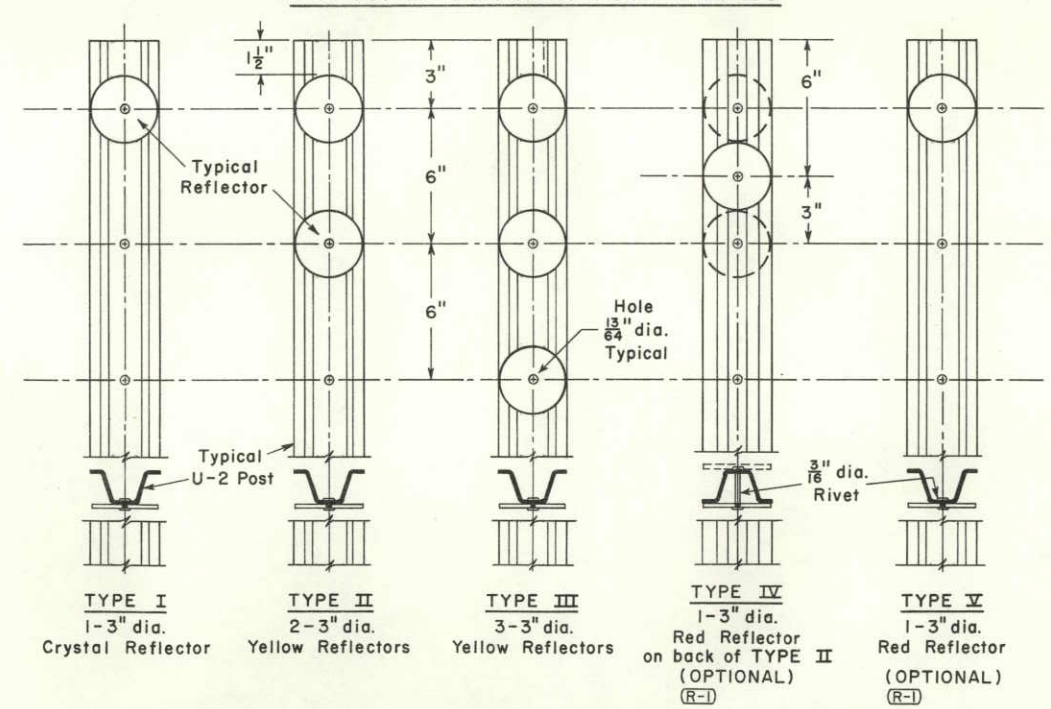

TYPICAL DELINEATOR PLACEMENT

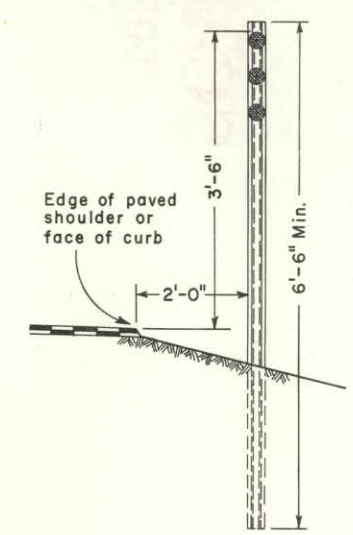

TYPICAL U-2 POST SECTION AND NOTES

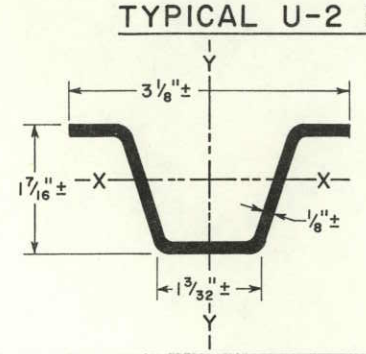

Steel posts shall meet requirements of Paragraph 4.5 U.S. Dept. of Commerce Commercial Standard 184-51. Re-rolled rails are acceptable material.

Posts are to weigh 2 lbs./ft. with a mill tolerance of minus 3 1/2% of the weight of any one post being allowed.

Alternate post is acceptable if section modulus is at least 0.200 in.³ about the X-X axis and at least 0.250 in.³ about the Y-Y axis.

Posts shall be set in drilled or excavated holes, placed plumb and firmly tamped in place; or may be driven plumb.

A minimum of 3 holes for Types I, II, III and V and a minimum of 4 holes for Type IV delineator posts with 13/64" diameter are required (spacing as shown above).

DEPARTMENT OF HIGHWAYS
STATE OF COLORADO
DIVISION OF HIGHWAYS

TYPICAL DELINEATOR INSTALLATIONS

Designed By: G.W.F.	Approved By: [signature]
Made By: F.J.B.	Traffic Engineer
Checked By: J.D.S.	Date Sept. 22, 1972

STANDARD S-612-51A (R-1)

(SHEET 2 OF 2 SHEETS)

SEPTEMBER 29, 1972

FEDERAL ROAD REGION NO.	DIVISION	PROJ. NO.	SHEET NO.	TOTAL SHEETS
VIII	COLORADO			

REVISIONS			
(R-1)	10-26-72	Rev. Std. No., Notes & Red Usage.	J.D.S.

TYPICAL INSTALLATION FOR CHANNELIZED INTERSECTION

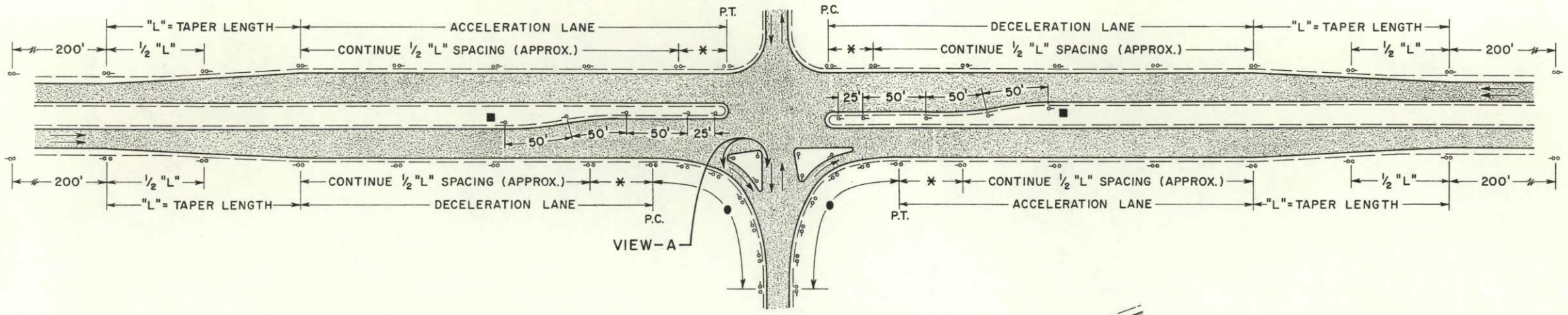

VIEW-A, TYPICAL ISLAND

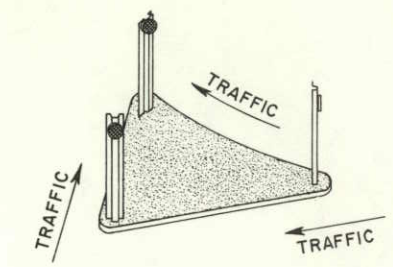

TYPICAL INSTALLATION FOR 4-LANE DIVIDED HIGHWAY

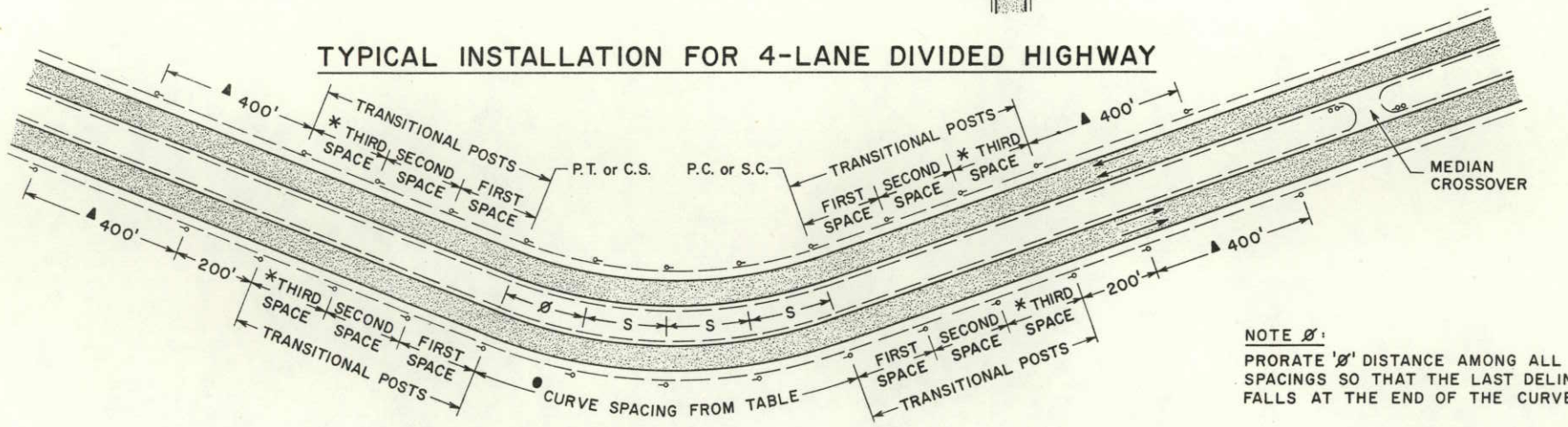

TYPICAL INSTALLATION FOR 2-LANE, 2-WAY HIGHWAY

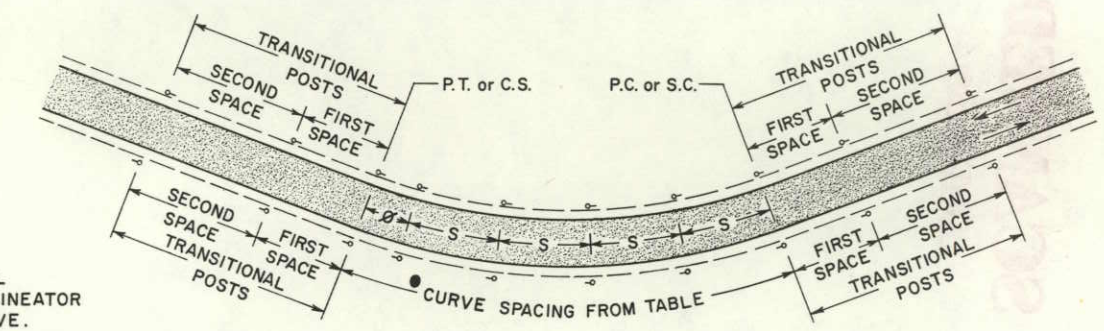

NOTE Ø:
PRORATE 'Ø' DISTANCE AMONG ALL SPACINGS SO THAT THE LAST DELINEATOR FALLS AT THE END OF THE CURVE.

TYPICAL INSTALLATION FOR BRIDGE APPROACHES

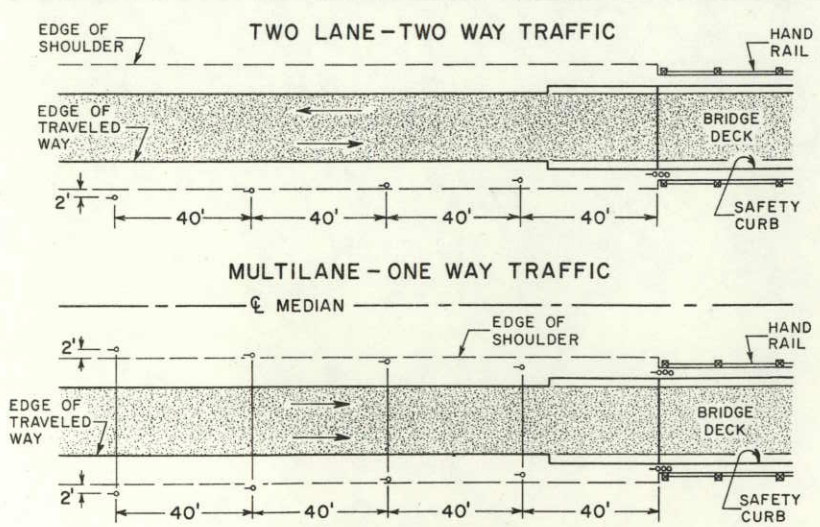

BRIDGE NOTES

WHERE CURB TO CURB WIDTH OF BRIDGE IS EQUAL TO OR GREATER THAN ROADWAY WIDTH PLUS USABLE SHOULDER WIDTH, USE THE TYPE III DELINEATORS ONLY AND OMIT ALL THE TYPE I DELINEATORS.
WHEN APPROACH SLAB HAS CURB, PLACE THE TYPE III DELINEATOR IMMEDIATELY BEHIND THE CURB.

(R-1) GENERAL NOTES CONT'D.

12. Red delineators may be installed on existing roadways where investigation shows a need to guard against wrong-way movements.

TYPICAL DELINEATOR FABRICATION DETAILS

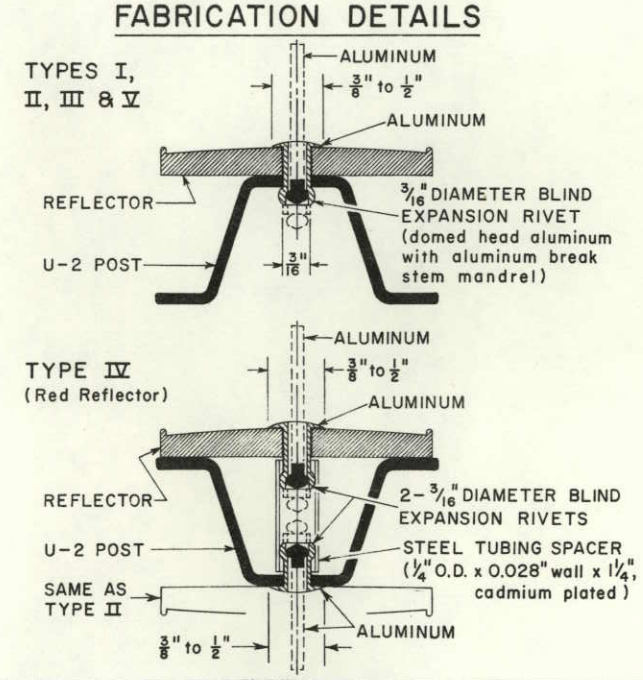

TYPICAL INSTALLATION FOR CLIMBING LANE TRANSITION

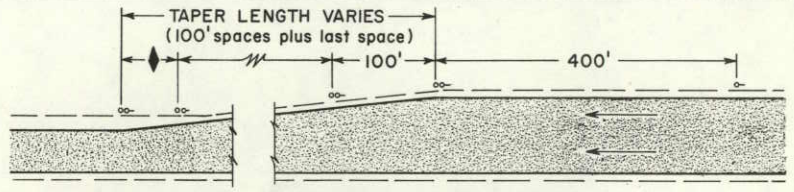

NO SPECIAL TREATMENT REQUIRED AT BEGINNING OF CLIMBING LANE.

PLAN LEGEND

- ♀ TYPE I DELINEATORS
- TYPE II DELINEATORS
- TYPE III DELINEATORS
- (R-1) ▲ EXPRESSWAY SPACING
- ■ SEE GENERAL NOTE 5
- ✳ SEE SPACING TABLE
- ● SEE SPACING TABLE
- ♦ LAST SPACE (Space is variable - not to exceed 100')

DEPARTMENT OF HIGHWAYS
STATE OF COLORADO
DIVISION OF HIGHWAYS

TYPICAL DELINEATOR INSTALLATIONS

Designed By: G.W.F.	Approved By: [signature]
Made By: F.J.B.	Traffic Engineer
Checked By: J.D.S.	Date Sept 29, 1972

STANDARD S-614-18A

JANUARY 14, 1971

FEDERAL ROAD REGION NO.	DIVISION	PROJ. NO.	SHEET NO.	TOTAL SHEETS
9	COLORADO			

REVISIONS		

TYPICAL POLE MOUNT INSTALLATION
for Class II Marker Assembly

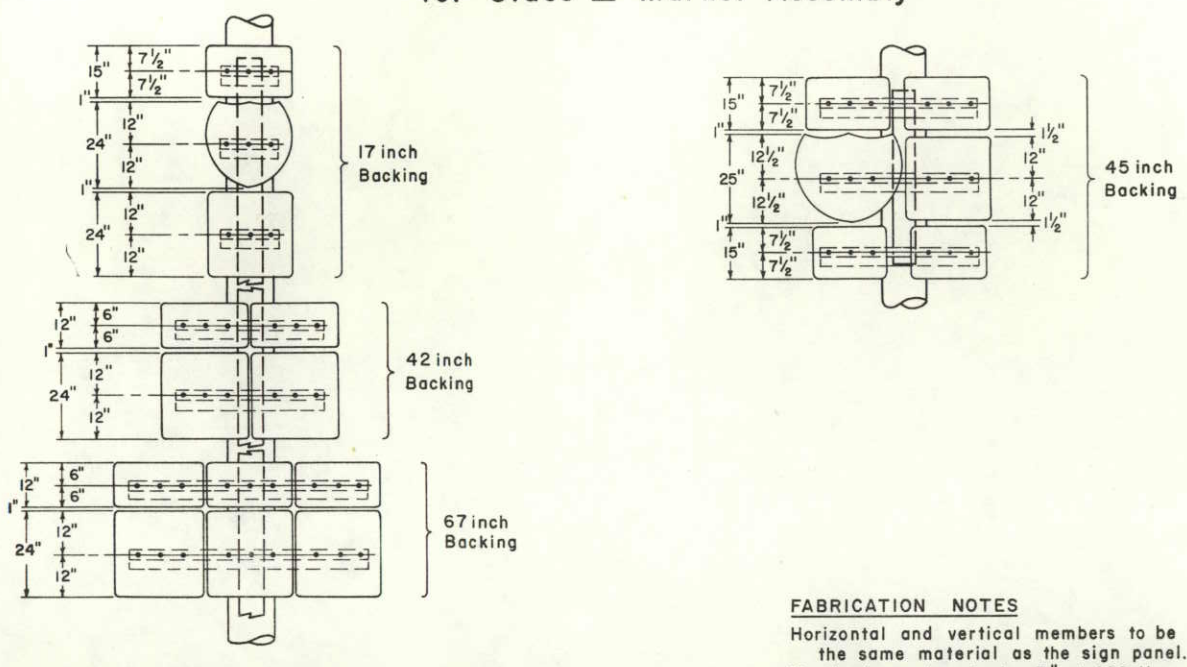

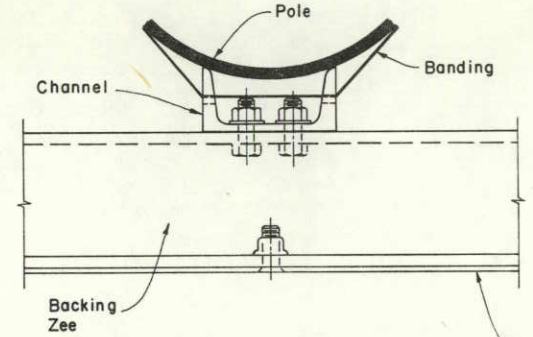

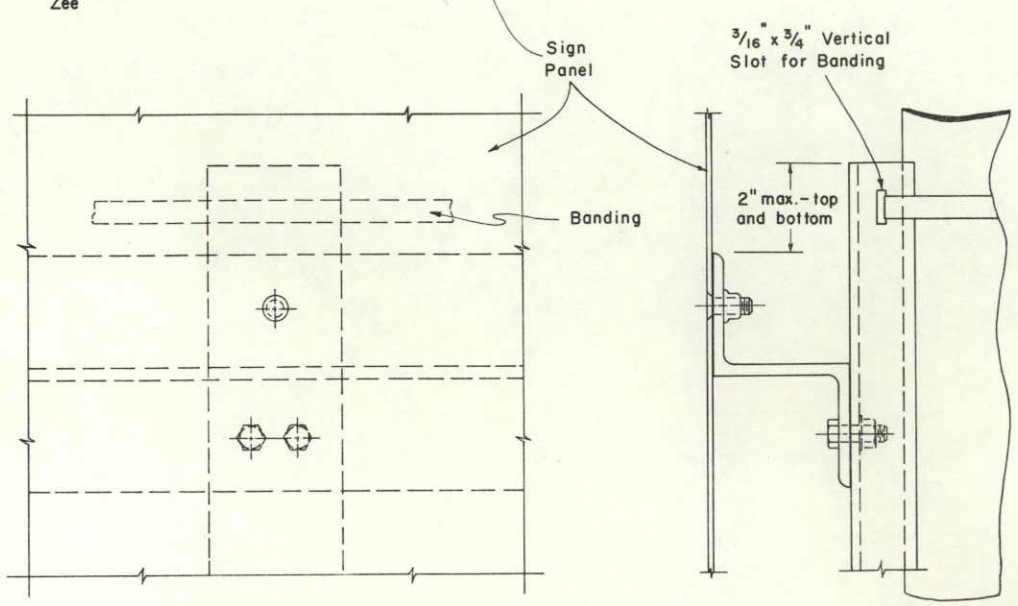

FABRICATION NOTES

Horizontal and vertical members to be the same material as the sign panel.
Vertical member to be 3" x 1.420 lbs. 6061-T6 channel banded to the pole with a minimum of two bands.
Horizontal members to be 3" x 2 3/4" x 1/4" backing zees, fastened to vertical member with 3/8" ø machine bolts with hex nut.
Sign panels to be fastened to horizontal members with 3/8"ø-90° countersunk lockbolt fasteners.
Vertical spacing between groups of panels in one marker assembly shall be 4 inches.

TYPICAL POLE MOUNT INSTALLATION
for Class I and II Sign Panels

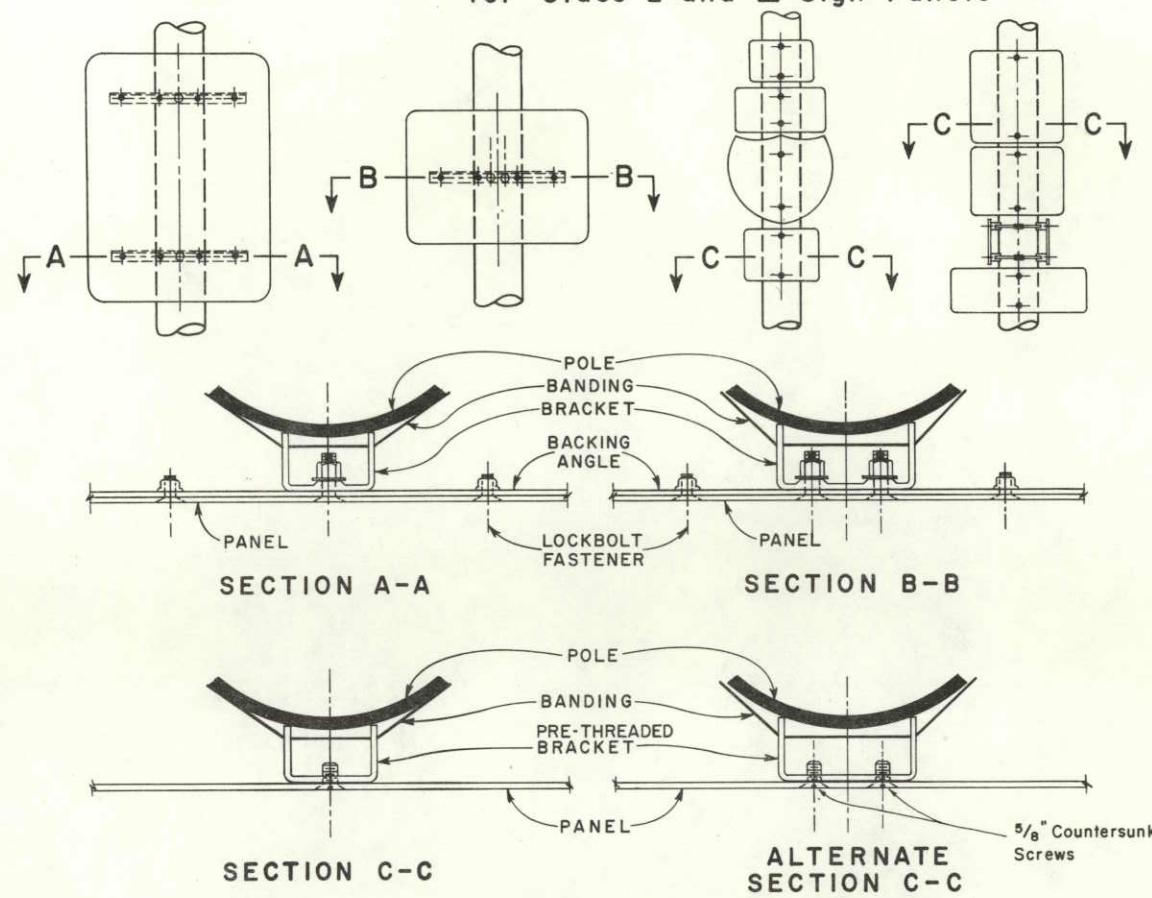

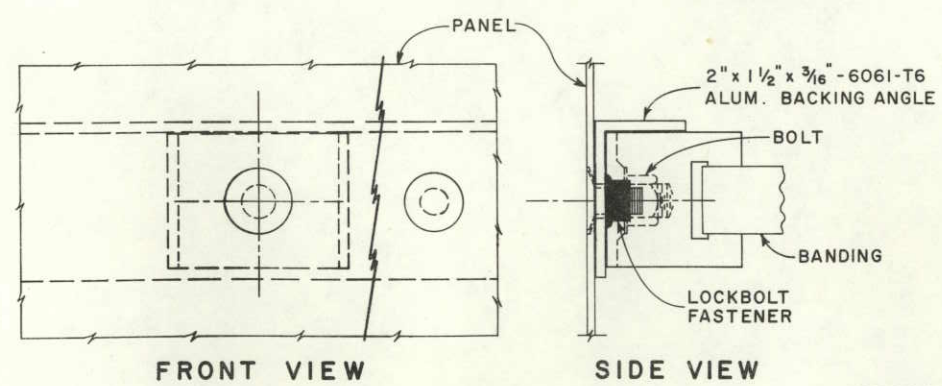

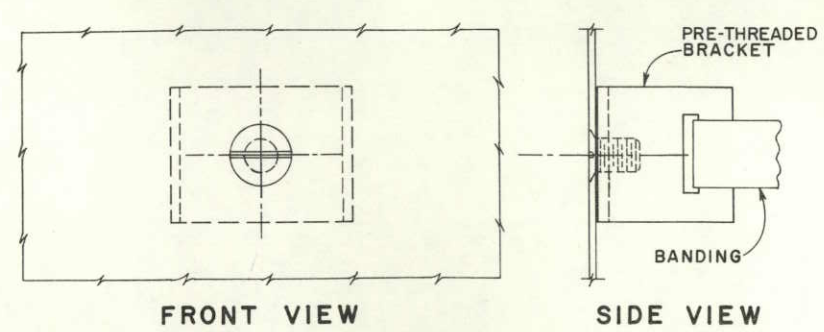

FABRICATION NOTES

Shapes other than the brackets or backing angle shown may be used.
Maximum spacing between panels in one assembly shall be 1 inch.
Panels may be installed back-to-back on the same bands.
In no case shall bolts of less than 5/16" dia. be used for any portion of the assembly.
Only fiber washers may be used on the face of the sign panel.

GENERAL NOTES

1. All work shall be done in accordance with the Standard Specifications applicable for this project.
2. Signs shall be located in accordance with the details shown on the plans. Special care shall be taken to insure an unobstructed view of each sign.
3. Brand-name attachment hardware and banding material to be approved by the Engineer.
4. For sign panel fabrication, mounting height and hole spacing for backing zees, see applicable Standard.
5. All bolts, nuts and metal washers, unless made of stainless steel, shall be galvanized or cadmium plated.
6. All holes shall be drilled or punched.
7. Exposed bolt heads and fiber washers on the face of the panel shall be painted or reflectorized to match the surrounding color.
8. Banding shall be 1/2" x .025 (min.) stainless steel, round-edge strap with an ultimate breaking strength of 1500 lbs. (min.). There shall be a minimum of two bands per panel or assembly except where a single backing angle is used.
9. Panels of 36" or greater width must have backing members in addition to brackets. Class II panels of less than 36" width and Class I panels of greater than 24" width should use pre-threaded brackets similiar to alternate section C-C (2 screws).

DEPARTMENT OF HIGHWAYS
STATE OF COLORADO
DIVISION OF HIGHWAYS

TYPICAL POLE MOUNT SIGN INSTALLATION

Designed By:	F. J. B.	Approved By:	[signature]
Made By:	F. J. B.		Traffic Engineer
Checked By:	J. J. S.	Date	Jan 14, 1971

STANDARD S - 614 - 19B

NOVEMBER 18, 1970

FEDERAL ROAD REGION NO.	DIVISION	PROJ. NO.	SHEET	TOTAL SHEETS
9	COLORADO			

REVISIONS			
(R-1)	11-17-71	Table	J.D.S.

WARNING SIGN PLACEMENT

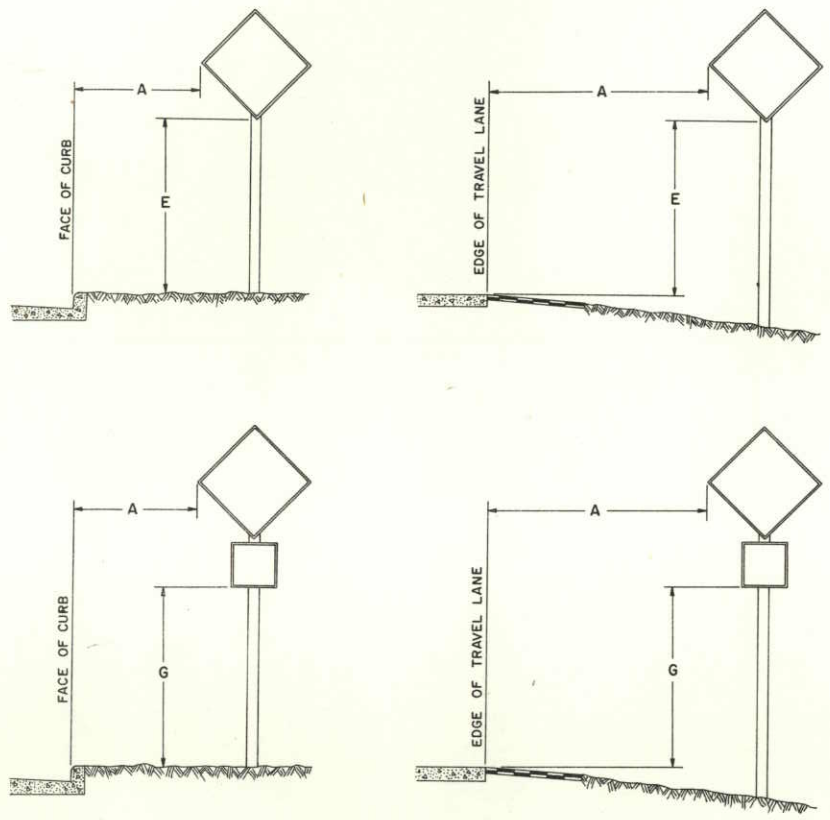

REGULATORY SIGN PLACEMENT

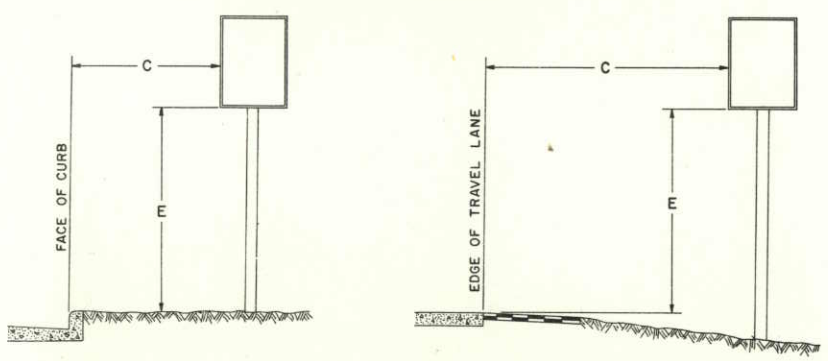

ROUTE MARKER ASSEMBLY PLACEMENT

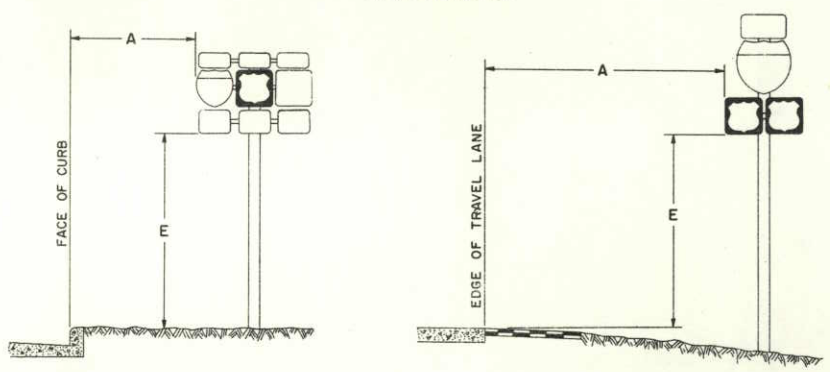

CLASS III SIGN PLACEMENT

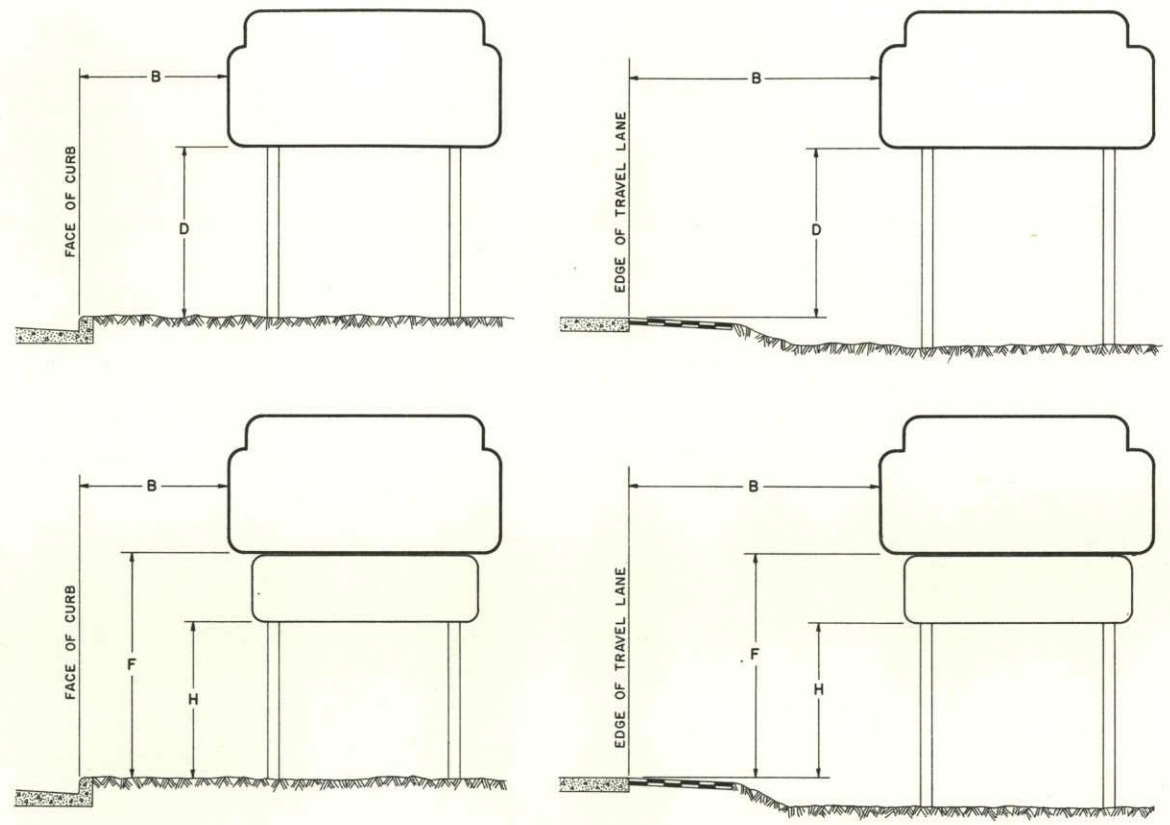

GENERAL NOTES

1. All work shall be done in accordance with the Standard Specifications applicable to the project.
2. The Engineer shall establish grades and locations for all sign posts in accordance with details shown on the plans.
3. Special care shall be taken in sign location to ensure an unobstructed view of each sign.
4. Signs shall be set to provide as much lateral clearance as existing conditions permit but shall not exceed maximum clearances as shown in the LATERAL PLACEMENT TABLE.
5. The lateral placement for all signs may be reduced to a minimum of 2 ft. outside of the shoulder edge or face of curb where necessary to fit field conditions or improve sight distance.
6. Minimum post embedment shall be 3 ft. for U-2 posts and 4"x4" timber posts, and 5 ft. for 6"x6" timber posts. For footing depth see applicable Standard.

CLASS III SIGNS PANEL GROUND CLEARANCE

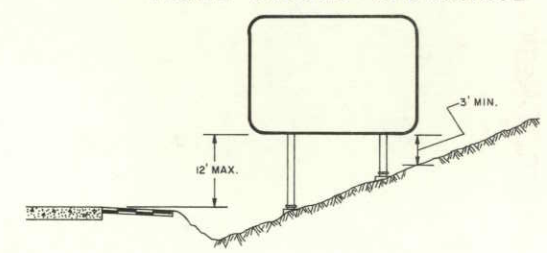

TYPICAL LOCATIONS STOP SIGNS AND YIELD SIGNS

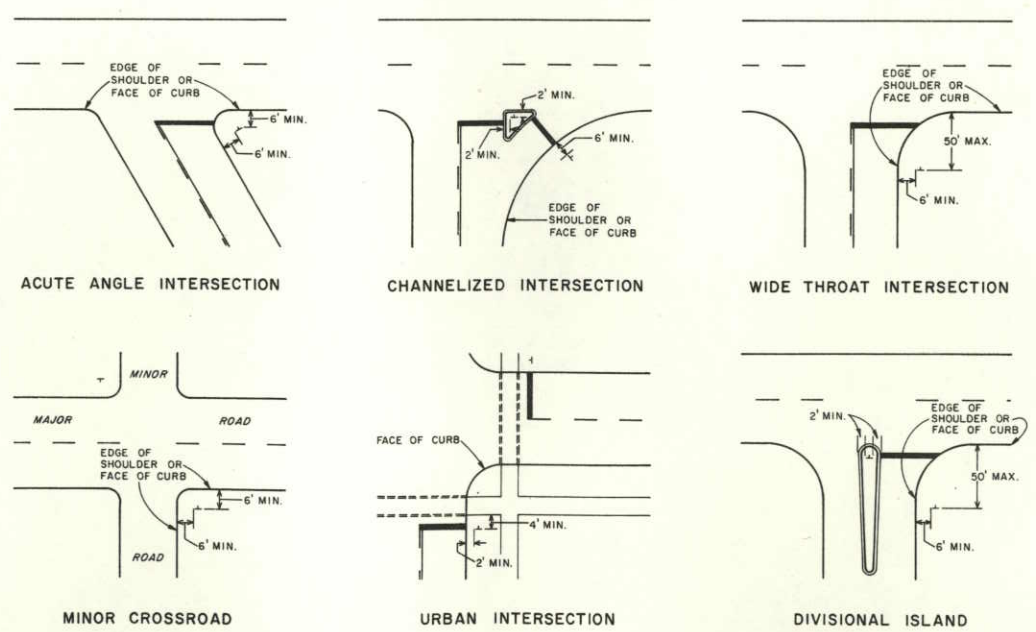

ACUTE ANGLE INTERSECTION

CHANNELIZED INTERSECTION

WIDE THROAT INTERSECTION

MINOR CROSSROAD

URBAN INTERSECTION

DIVISIONAL ISLAND

PLACEMENT TABLES

LATERAL

KEY	ALL SYSTEMS	
	MIN.	MAX.
A	*	22'-0"
B	*	30'-0"
C	*	16'-0"

* In no case shall any part of a sign be less than 2 ft. beyond any surface prepared for normal or emergency travel of vehicles.

(R-1) VERTICAL

KEY	INTERSTATE	EXPRESSWAY		NON-EXPRESSWAY	
		URBAN	RURAL	URBAN	RURAL
D	5'-0"**	7'-0"	6'-0"	7'-0"	5'-0"
E	6'-0"	7'-0"	5'-0"	7'-0"	5'-0"
F	8'-0"	—	—	—	—
G	6'-0"	6'-0"	4'-0"	6'-0"	4'-0"
H	5'-0"	4'-0"	4'-0"	4'-0"	4'-0"

** When lateral placement is minimum, "D" shall be 7'-0".

ANGULAR PLACEMENT (ALL GROUND SIGNS)

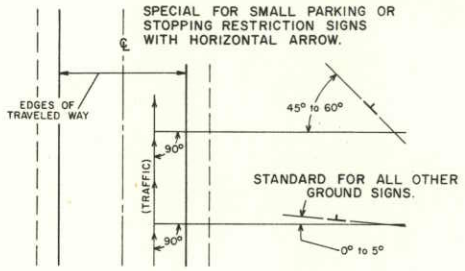

DEPARTMENT OF HIGHWAYS
STATE OF COLORADO
DIVISION OF HIGHWAYS

TYPICAL GROUND SIGN PLACEMENT

Designed By:	J.J.S.	Approved By:	[signature]
Made By:	J.E.M.	Traffic Engineer	
Checked By:	J.J.B.	Date	Nov. 18, 1970

STANDARD S-614-20B

JULY 1, 1968

FEDERAL ROAD REGION NO.	DIVISION	PROJ. NO.	SHEET NO.	TOTAL SHEETS
VIII	COLORADO			

REVISIONS			
R-1	11-17-71	Illustrations & Note	J.D.S.
R-2	10-6-72	Rev post, Add note	J.D.S.
R-3	11-2-73	Rev. Illustrations	J.D.S.

TYPICAL CLASS I GROUND SIGN INSTALLATIONS

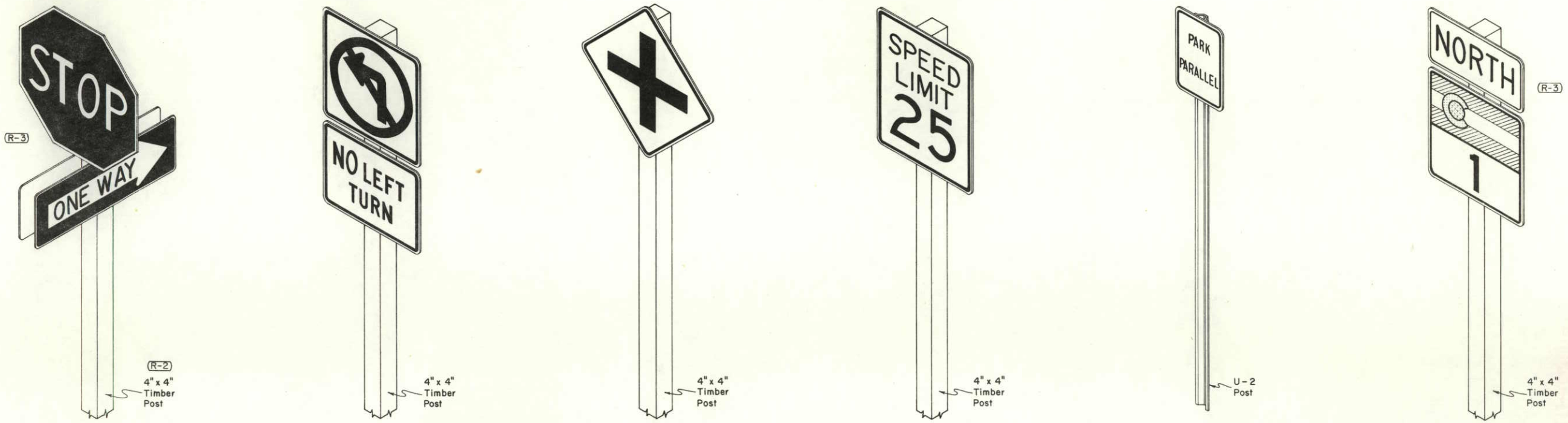

GENERAL NOTES

1. All work shall be done in accordance with the Standard Specifications applicable to the Project.
2. All Class I sign panels shall be either sheet steel, 0.0598" minimum thickness, or sheet aluminum, 0.100" minimum thickness.
3. Class I sign panels shall be fastened directly to the post. Fasten to U-2 post with 2 - 1/4" stove bolts and to timber posts with 2 - 3/8" machine bolts. See appropriate Standard for exceptions.
4. A plastic fiber washer shall be placed between the bolt head and the face of the sign panel. Use a C.I.O.G. washer under the nut on the back of the timber post.
5. Bolts, nuts and metal washers shall be galvanized or cadmium plated.
6. Exposed bolt heads and fiber washers on the face of the sign panel shall be painted or reflectorized to match the surrounding color.
7. (R-2) All reflective sheeting shall be of the Smooth Surface Type.
8. For sign placement see appropriate Standard.
9. (R-1) Steel posts shall meet requirements of Paragraph 4.5 U.S. Department of Commerce Commercial Standard 184-51. Re-rolled rails will not be permitted. U-2 post to weigh 2 lbs./ft. A mill tolerance of minus 3 1/2 % of the weight of any one post will be allowed. Alternate post acceptable if section modulus is at least 0.200 in.^{3} about the X-X axis and at least 0.250 in.^{3} about the Y-Y axis.
10. For additional information, refer to "TABULATION OF SIGNS". Timber posts shall be 4"x4" or 6"x6" as noted therein and shall conform to Standard Dressed (S4S) Sizes.
11. (R-2) Vertical spacing between panels on the same post shall be 1" minimum to 1 1/2" maximum.

TYPICAL TIMBER POST SECTION

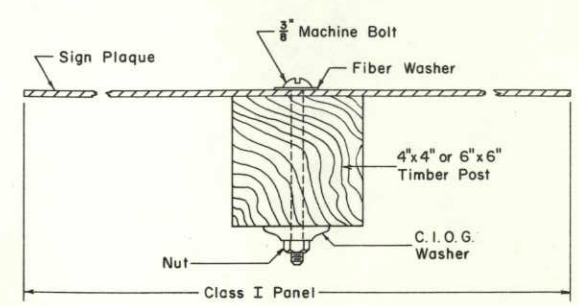

TYPICAL U-2 POST SECTION

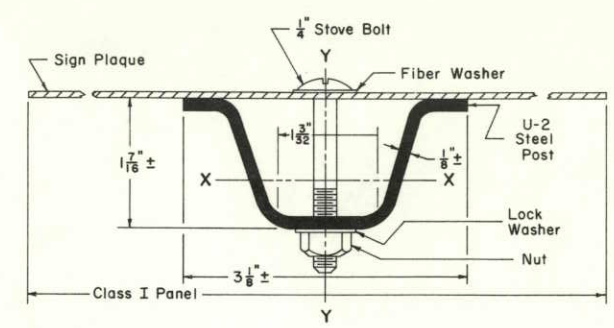

DEPARTMENT OF HIGHWAYS
STATE OF COLORADO
DIVISION OF HIGHWAYS

CLASS I GROUND SIGN INSTALLATIONS

Designed By:	F.J.B.	Approved By:	
Made By:	J.E.M.	Traffic Engineer	
Checked By:	J.D.S.	Date July 1, 1968	

STANDARD S-614-21B

JULY 1, 1968

FEDERAL ROAD REGION NO.	DIVISION	PROJ. NO.	SHEET NO.	TOTAL SHEETS
9	COLORADO	[redacted]		

REVISIONS			
R-1	4-22-69	REVISED TABLE	J.L.S.
R-2	12-2-69	REV. TABLE & ADD NOTE	J.J.B.

DIAMOND

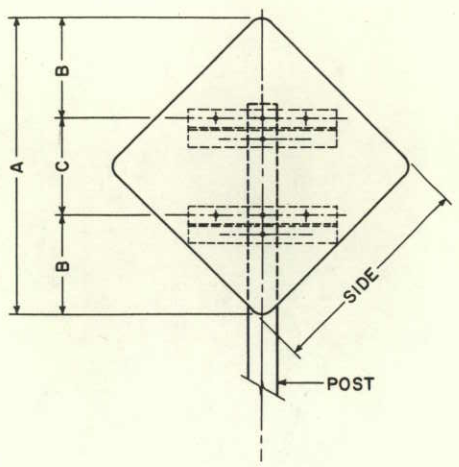

TRIANGLE

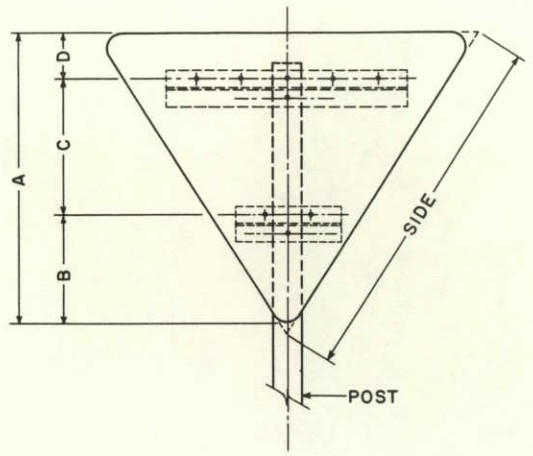

OCTAGON

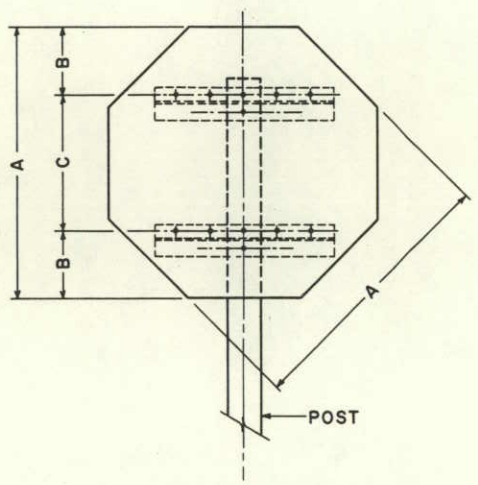

CIRCLE

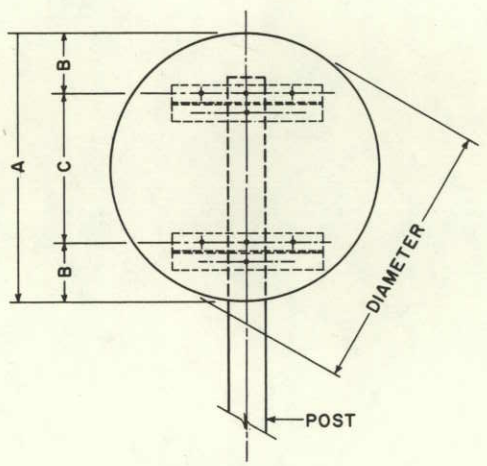

RECTANGLE

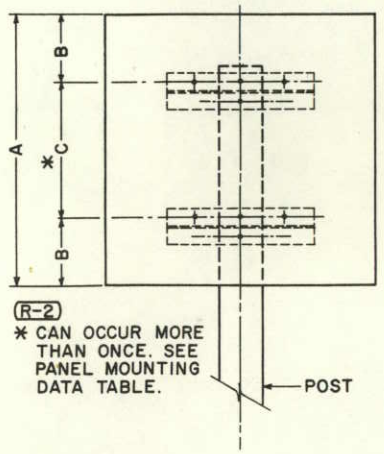

(R-2)
* CAN OCCUR MORE THAN ONCE. SEE PANEL MOUNTING DATA TABLE.

RECTANGLE (ONE ZEE)

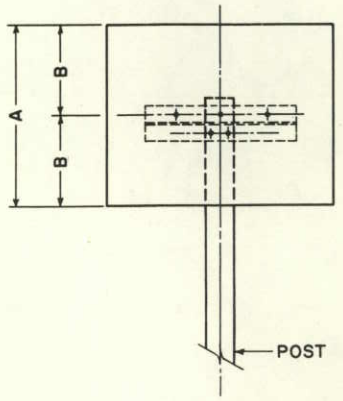

CLASS II PANEL MOUNTING DATA (R-1) (R-2)

SIGN TYPE	A	B	C	D	POST SIZE	BACKING ZEE LENGTH
DIAMOND 30" SIDES	40 7/8"	14 7/16"	12"	—	4" x 4"	1'-8"
36" SIDES	49 1/16"	14 1/32"	21"	—	6" x 6"	1'-8"
48" SIDES	65 3/8"	20 3/16"	25"	—	6" x 6"	2'-8"
TRIANGLE 36" SIDES	29 3/16"	14 3/16"	9"	6"	4" x 4"	1'-8", 1'-2"
48" SIDES	38 9/16"	14 9/16"	18"	6"	4" x 4"	2'-8", 1'-2"
60" SIDES	48"	20"	22"	6"	6" x 6"	2'-8", 1'-8"
OCTAGON 30" x 30"	30"	9"	12"	—	4" x 4"	1'-8"
48" x 48"	48"	12"	24"	—	6" x 6"	2'-8"
CIRCLE 36" DIAMETER	36"	8"	20"	—	6" x 6"	1'-8"
RECTANGLE 40" x 20"	20"	10"	—	—	4" x 4"	2'-8"
30" x 24"	24"	12"	—	—	4" x 4"	1'-8"
36" x 24"	24"	12"	—	—	4" x 4"	2'-2"
40" x 24"	24"	12"	—	—	4" x 4"	2'-8"
48" x 24"	24"	12"	—	—	6" x 6"	3'-2"
30" x 30"	30"	9"	12"	—	4" x 4"	1'-8"
48" x 30"	30"	9"	12"	—	6" x 6"	3'-2"
60" x 30"	30"	9"	12"	—	6" x 6"	4'-2"
30" x 36"	36"	9"	18"	—	6" x 6"	1'-8"
36" x 36"	36"	9"	18"	—	6" x 6"	2'-2"
48" x 36"	36"	9"	18"	—	6" x 6"	3'-2"
40" x 40"	40"	9"	22"	—	6" x 6"	2'-8"
36" x 42"	42"	9"	24"	—	6" x 6"	2'-2"
36" x 48"	48"	12"	24"	—	6" x 6"	2'-2"
40" x 48"	48"	12"	24"	—	6" x 6"	2'-8"
42" x 48"	48"	12"	24"	—	6" x 6"	2'-8"
48" x 48"	48"	12"	24"	—	6" x 6"	3'-2"
60" x 48"	48"	12"	24"	—	6" x 6"	4'-2"
48" x 54"	54"	12"	30"	—	6" x 6"	3'-2"
48" x 60"	60"	12"	36"	—	6" x 6"	3'-2"
36" x 72"	72"	10"	26" (2)	—	6" x 6"	2'-2"
48" x 96"	96"	12"	24" (3)	—	6" x 6"	3'-2"

GENERAL NOTES

1. All work shall be done in accordance with the Standard Specifications applicable to the project.
2. All Class II sign panels shall be either single sheet steel, 0.0598" minimum thickness, or single sheet aluminum, 0.100" minimum thickness, and shall be furnished with backing zees.
3. Timber posts shall be 4"x4" or 6"x6" as noted in the "Tabulation of Signs" and shall conform to Standard Dressed (S4S) Sizes.
4. Backing zees are 3" x 2 3/4" x 1/4" at 6.7 lbs. per ft. for steel or 2.33 lbs. per ft. for 6061-T6 aluminum.
5. Exposed bolt heads on the face of the sign shall be painted or reflectorized to match the surrounding color.
6. For sign placement see "Typical Ground Sign Placement" Standard.
7. All reflective sheeting shall be of the Non-Exposed Lens Type.
8. Bolts, nuts and metal washers shall be galvanized or cadmium plated.

SECONDARY PANEL MOUNTING

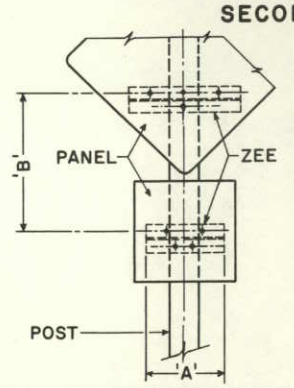

PANEL SIZE		'A' ZEE LENGTH	'B' ZEE SPACING	POST SIZE
PRIMARY	SECONDARY			
30" SIDES	18" SQUARE	1'-2"	24 7/16"	6" x 6"
36" SIDES	24" SQUARE	1'-8"	27 1/32"	6" x 6"
48" SIDES	24" SQUARE	1'-8"	33 3/16"	6" x 6"

NOTE: SEE CLASS II PANEL MOUNTING DATA AND TYPICAL BACKING ZEES FOR OTHER DIMENSIONS AND FASTENERS.

TYPICAL BACKING ZEES

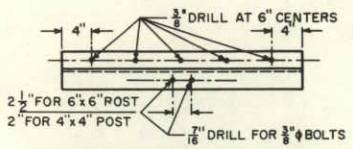

ONE POST-ONE ZEE

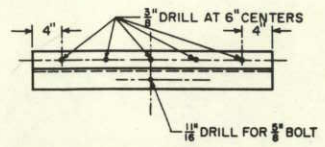

ONE POST-TWO ZEES

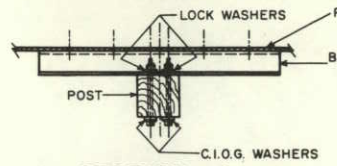

SECTION-A

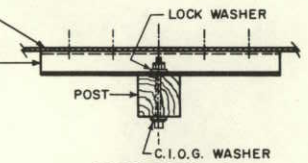

SECTION-B

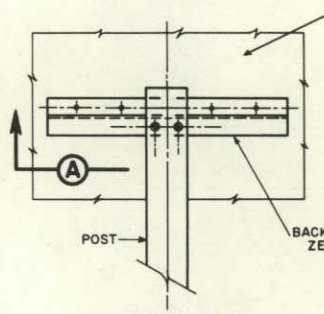

BACK VIEW

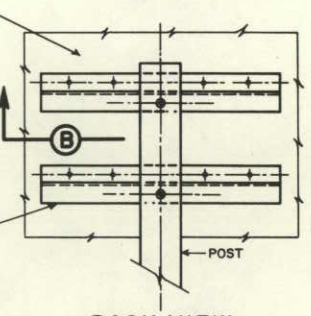

BACK VIEW

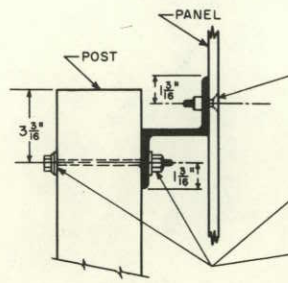

SIGNS ARE FASTENED TO BACKING ZEES WITH 3/16" ϕ (NO. 4 THRU NO. 10, AS REQUIRED) 90° COUNTERSUNK ALUMINUM LOCKBOLT FASTENERS.

FOR SINGLE POST SIGNS WITH ONE BACKING ZEE, USE TWO 3/8" ϕ MACHINE BOLTS WITH C.I.O.G. WASHERS AND HEX NUTS WITH LOCK WASHERS AT THE ZEE.

FOR SINGLE POST SIGNS WITH TWO BACKING ZEES, USE ONE 3/8" ϕ MACHINE BOLT WITH C.I.O.G. WASHER AND HEX NUT WITH LOCK WASHER AT EACH ZEE.

END VIEW

DEPARTMENT OF HIGHWAYS
STATE OF COLORADO
DIVISION OF HIGHWAYS

CLASS II GROUND SIGN INSTALLATIONS

Designed By: J. L. S.
Made By: F. J. B.
Checked By: G.W.F.

Approved By [signature]
Traffic Engineer
Date July 1, 1968

STANDARD S-614-22C

(DECEMBER 11, 1970)

FEDERAL ROAD REGION NO.	DIVISION	PROJ. NO.	SHEET NO.	TOTAL
9	COLORADO			

REVISIONS		
(R-1) 6-16-71	Panel sizes & Gen. note	J.J.B.

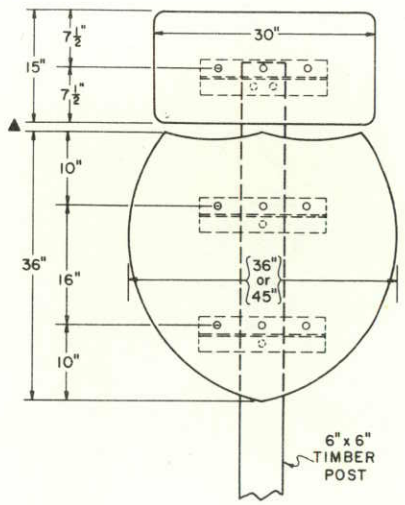

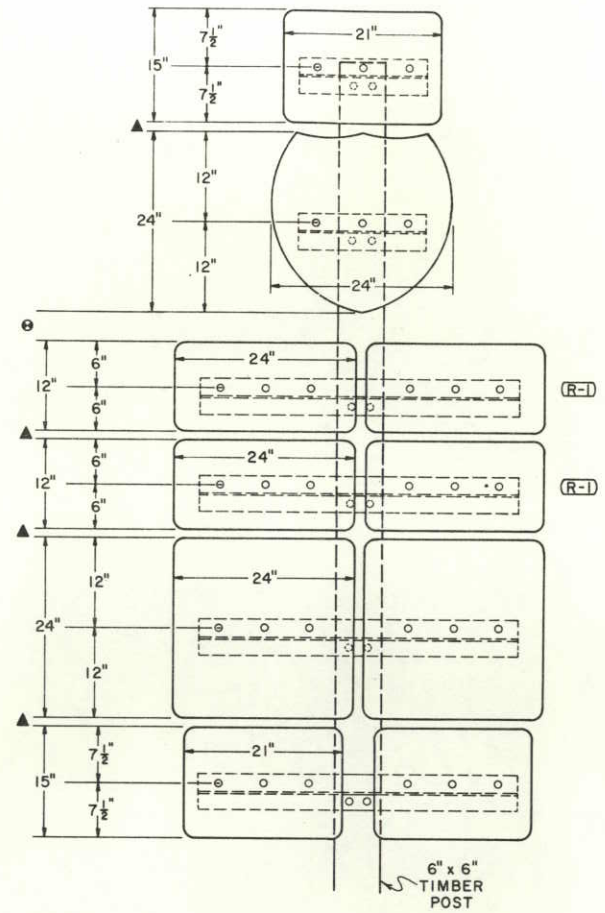

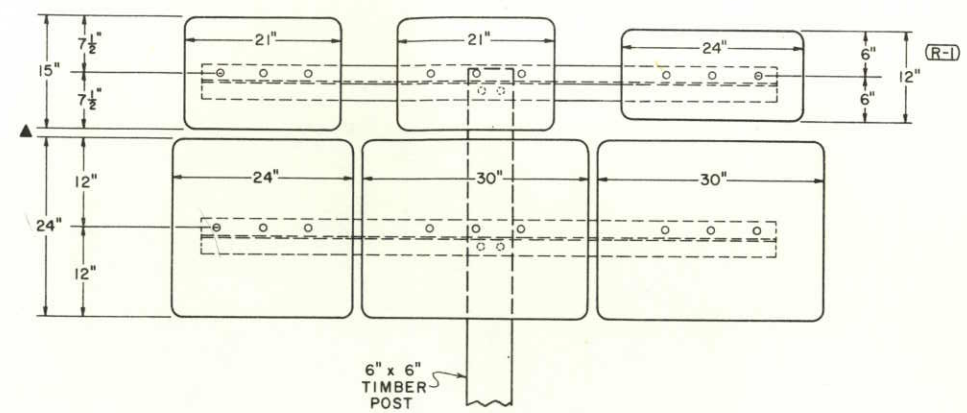

PANEL COMBINATIONS	ZEE LENGTH	HOLE SPACING
24", 30", 36", 45"	17"	2½", 6", 6", 2½"
24" & 24"	42"	2½", 6", 6", 13", 6", 6", 2½"
24" & 30"	45"	2½", 6", 6", 16", 6", 6", 2½"
30" & 30"	48"	2½", 6", 6", 19", 6", 6", 2½"
24" & 24" & 24"	67"	2½", 6", 6", 13", 6", 6", 13", 6", 6", 2½"
24" & 24" & 30"	70"	2½", 6", 6", 13", 6", 6", 16", 6", 6", 2½"
24" & 30" & 24"	73"	2½", 6", 6", 16", 6", 6", 16", 6", 6", 2½"
30" & 24" & 30"	73"	2½", 6", 6", 16", 6", 6", 16", 6", 6", 2½"
24" & 30" & 30"	76"	2½", 6", 6", 16", 6", 6", 19", 6", 6", 2½"
30" & 30" & 30"	79"	2½", 6", 6", 19", 6", 6", 19", 6", 6", 2½"

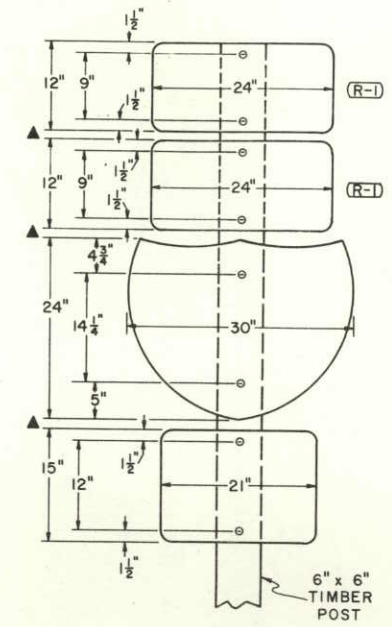

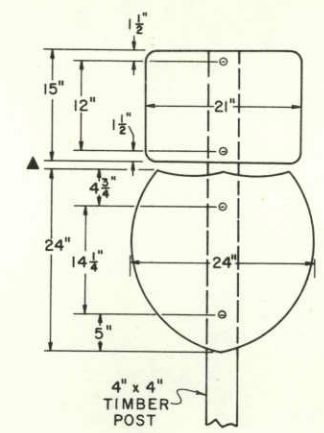

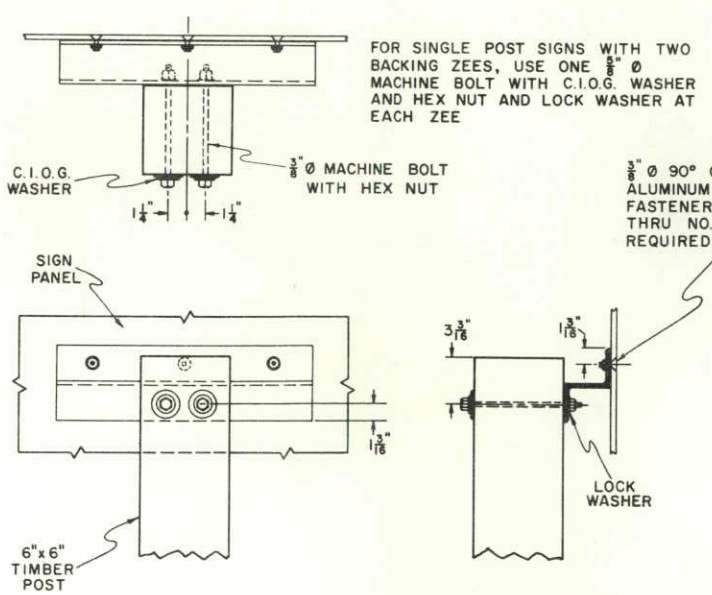

CLASS II MARKER ASSEMBLY INSTALLATION

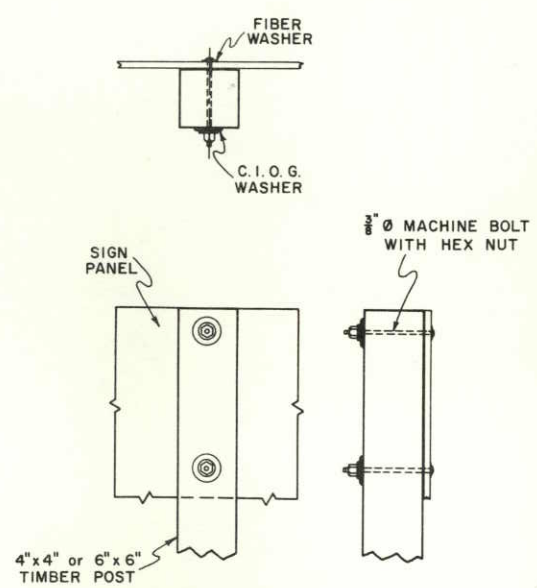

CLASS I MARKER ASSEMBLY INSTALLATION

GENERAL NOTES

1. All work shall be done in accordance with the Standard Specifications applicable to the project.
2. For sign placement see "TYPICAL GROUND SIGN PLACEMENT" STANDARD.
3. For sign panel fabrication details, see applicable STANDARDS.
4. Timber posts shall be 4"x4" or 6"x6" as noted in the "TABULATION OF SIGNS" and shall conform to standard dressed (S4S) sizes.
5. Posts shall be set in drilled or excavated holes, placed plumb, and firmly tamped in place.
6. Backing zees are 3"x2¾"x¼". Steel zees shall weigh 6.7 lbs. per foot and aluminum zees shall be of 6061-T6 alloy weighing 2.33 lbs. per foot.
7. All reflective sheeting shall be of the non-exposed lens type.
8. ▲ Vertical spacing between panels shall be 1" minimum to 1½" maximum.
9. ⊖ Vertical spacing between groups of panels shall be 4".
10. Bolts, nuts, and metal washers shall be galvanized or cadmium plated.
11. Exposed bolt heads and fiber washers on the face of the sign panel shall be painted or reflectorized to match the surrounding color.
12. (R-1) Zee length and hole spacing for auxiliary markers to be the same as for corresponding route markers.

DEPARTMENT OF HIGHWAYS
STATE OF COLORADO
DIVISION OF HIGHWAYS

TYPICAL MARKER ASSEMBLY INSTALLATIONS

Designed By: J.J.S. Made By: J.E.M. Checked By: J.J.B.	Approved By: [signature] Traffic Engineer Date Dec., 1970

STANDARD S-614-23 C

(SHEET 1 OF 2 SHEETS)

OCTOBER 20, 1969

FEDERAL ROAD REGION NO.	DIVISION	PROJ. NO.	SHEET NO.	TOTAL SHEETS
9	COLORADO			

REVISIONS		

TYPICAL PANEL ELEVATIONS

HORIZONTAL SECTIONS

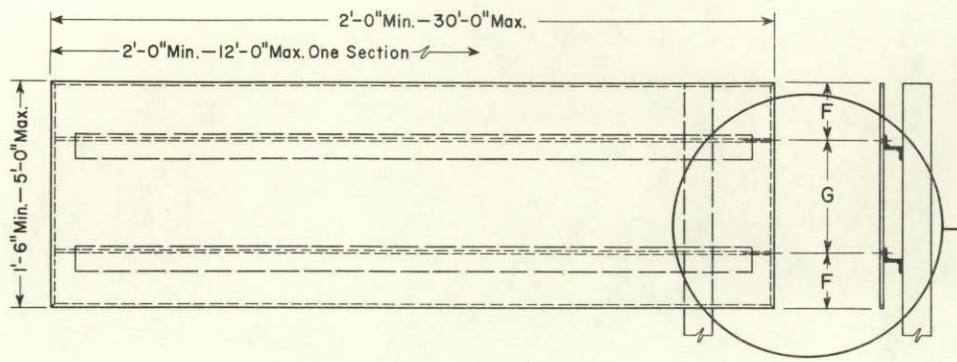

SECTIONS REQUIRED
Height x 2'-0" to 12'-0" = 1 Section
Height x 12'-6" to 24'-0" = 2 Sections
Height x 24'-6" to 30'-0" = 3 Sections

SEE TYPICAL DETAIL ON SHEET 2

VERTICAL SECTIONS

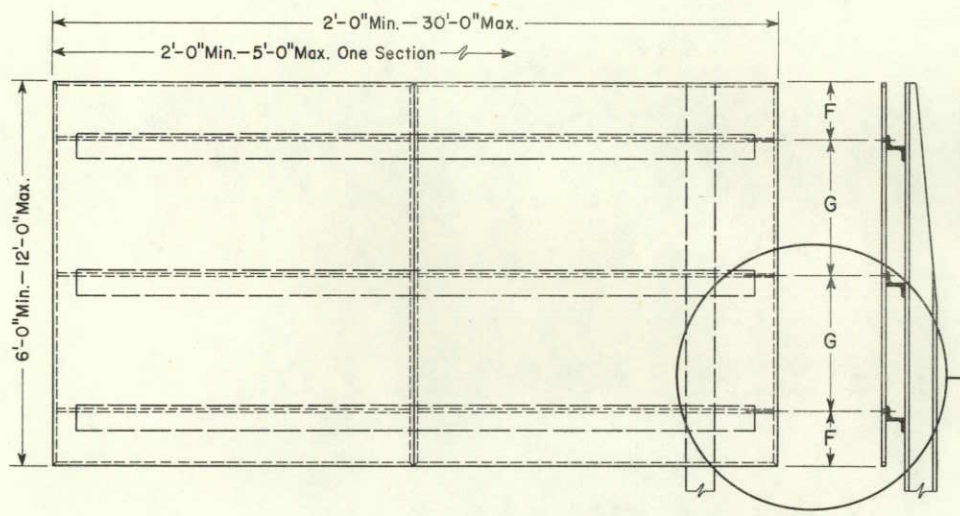

SECTIONS REQUIRED
Height x 2'-0" to 5'-0" = 1 Section
Height x 5'-6" to 10'-0" = 2 Sections
Height x 10'-6" to 15'-0" = 3 Sections
Height x 15'-6" to 20'-0" = 4 Sections
Height x 20'-6" to 25'-0" = 5 Sections
Height x 25'-6" to 30'-0" = 6 Sections

SEE TYPICAL DETAIL ON SHEET 2

MULTI-VERTICAL SECTIONS

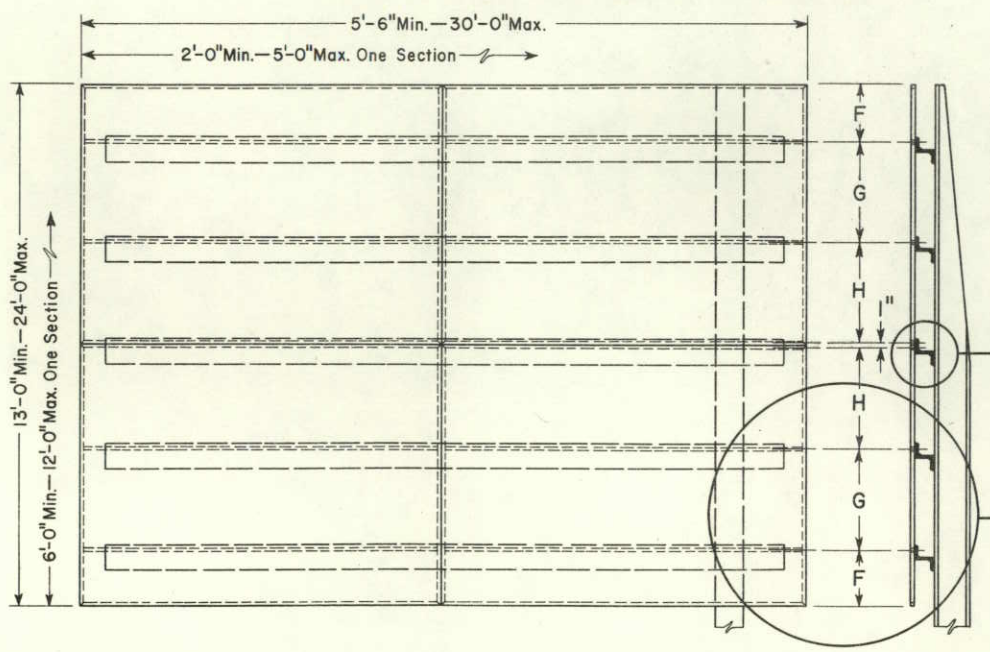

SECTIONS REQUIRED
Height x 5'-6" to 10'-0" = 4 Sections
Height x 10'-6" to 15'-0" = 6 Sections
Height x 15'-6" to 20'-0" = 8 Sections
Height x 20'-6" to 25'-0" = 10 Sections
Height x 25'-6" to 30'-0" = 12 Sections

SEE TYPICAL SEAM CLOSURE ZEE DETAIL ON SHEET 2

SEE TYPICAL DETAIL ON SHEET 2

GENERAL NOTES

1. ALL WORK SHALL BE DONE IN ACCORDANCE WITH THE STANDARD SPECIFICATIONS APPLICABLE TO THE PROJECT.
2. SEE THE APPLICABLE STANDARDS FOR SIGN PLACEMENT AND FOOTING DETAILS.
3. FASTENERS: A BUTTON-HEAD BOLT WITH NUT AND WASHERS SHALL BE USED TO FASTEN THE SIGN PANEL TO THE BACKING ZEE. A HEX-HEAD BOLT WITH NUT AND WASHERS SHALL BE USED TO FASTEN THE BACKING ZEE TO A TIMBER POST OR TO A STEEL POST.
4. WASHERS: A FLAT WASHER WITH NEOPRENE SEAL SHALL BE PLACED BETWEEN THE BOLT HEAD AND THE PANEL FACE. A FLAT WASHER SHALL BE PLACED BETWEEN THE BOLT HEAD AND THE BACKING ZEE. A LOCK WASHER SHALL BE PLACED UNDER THE NUT ON A STEEL POST OR A BACKING ZEE. A C.I.O.G. WASHER SHALL BE PLACED UNDER THE BOLT HEAD ON A TIMBER POST.
5. BOLT HEADS AND WASHERS ON THE PANEL FACE SHALL BE DIPPED, PAINTED OR COVERED WITH REFLECTIVE SHEETING TO MATCH THE BACKGROUND COLOR OF THE SIGN.
6. SIGN PANELS SHALL BE CONSTRUCTED FROM THE LEAST NUMBER OF SECTIONS. THE SECTIONS SHALL BE AS LARGE AS POSSIBLE AND AS NEARLY EQUAL IN SIZE AS POSSIBLE, ACCORDING TO THE LIMITS SHOWN.
7. FOR ADDITIONAL POST AND PANEL INFORMATION SEE THE "TABULATION OF SIGNS" INCLUDED IN THE PLANS.

SPACING TABLE for ALUMINUM BACKING ZEES AND SUPPORT TUBES

SIGN PANEL HEIGHT	NUMBER OF ZEES AND SUPPORT TUBES	OVERHANG "F"	SPACING "G"	SIGN PANEL HEIGHT	NUMBER OF ZEES AND SUPPORT TUBES	OVERHANG "F"	SPACING "G"	SPACING "H"
1'-6"	2	0'-4"	0'-10"	13'-0"	7-6	1'-0"	1'-10"	1'-9½"
2'-0"	2	0'-5"	1'-2"	14'-0"	7-6	0'-6"	2'-2"	2'-1½"
2'-6"	2	0'-6"	1'-6"	15'-0"	7-6	1'-0"	2'-2"	2'-1½"
3'-0"	2	0'-7"	1'-10"	16'-0"	7-6	0'-6"	2'-6"	2'-5½"
4'-0"	2	0'-11"	2'-2"	17'-0"	7-6	1'-0"	2'-6"	2'-5½"
5'-0"	2	1'-3"	2'-6"	18'-0"	9-8	0'-4"	2'-2"	2'-1½"
6'-0"	3	0'-10"	2'-2"	19'-0"	9-8	0'-10"	2'-2"	2'-1½"
7'-0"	3	1'-0"	2'-6"	20'-0"	9-8	1'-4"	2'-2"	2'-1½"
8'-0"	4	0'-9"	2'-2"	21'-0"	9-8	0'-6"	2'-6"	2'-5½"
9'-0"	4	1'-3"	2'-2"	22'-0"	9-8	1'-0"	2'-6"	2'-5½"
10'-0"	4	1'-3"	2'-6"	23'-0"	11-10	0'-8"	2'-2"	2'-1½"
11'-0"	5	1'-2"	2'-2"	24'-0"	11-10	1'-2"	2'-2"	2'-1½"
12'-0"	5	1'-0"	2'-6"					

DEPARTMENT OF HIGHWAYS
STATE OF COLORADO
DIVISION OF HIGHWAYS

LAMINATED ALUMINUM PANELS AND POST SPACING TABLE FOR CLASS III SIGNS

Designed By: J.J.B.
Made By: F.J.B.
Checked By: J.L.S.

Approved By: [signature]
Traffic Engineer
Date: Oct 20, 1969

STANDARD S-614-23 C

(SHEET 2 OF 2 SHEETS)

OCTOBER 20, 1969

FEDERAL ROAD REGION NO.	DIVISION	PROJ. NO.	SHEET NO.	TOTAL SHEETS
9	COLORADO			

REVISIONS		

POST SPACING TABLE for LAMINATED, EXTRUDED, and SHEET ALUMINUM SIGN PANELS

WIDTH OF SIGN	NO. OF POSTS	OVERHANG "A"	POST SPACING "B"	NO. OF POSTS	OVERHANG "A"	POST SPACING "C"	NO. OF POSTS	OVERHANG "A"	POST SPACING "C"
1'-6"	1	0'-9"							
2'-0"	1	1'-0"							
2'-6"	1	1'-3"							
3'-0"	1	1'-6"							
4'-0"	1	2'-0"							
5'-0"	1	2'-6"							
6'-0"	2	1'-0"	4'-0"						
7'-0"	2	1'-3"	4'-6"						
8'-0"	2	1'-6"	5'-0"						
9'-0"	2	1'-10"	5'-4"						
10'-0"	2	2'-0"	6'-0"						
11'-0"	2	2'-0"	7'-0"	3	2'-0"	3'-6"			
12'-0"	2	2'-6"	7'-0"	3	2'-0"	4'-0"			
13'-0"	2	2'-6"	8'-0"	3	2'-6"	4'-0"			
14'-0"	2	2'-6"	9'-0"	3	2'-6"	4'-6"			
15'-0"	2	3'-0"	9'-0"	3	3'-0"	4'-6"			
16'-0"	2	3'-3"	9'-6"	3	3'-0"	5'-0"			
17'-0"	2	3'-3"	10'-6"	3	3'-0"	5'-6"			
18'-0"	2	3'-6"	11'-0"	3	3'-0"	6'-0"			
19'-0"	2	3'-9"	11'-6"	3	3'-0"	6'-6"			
20'-0"	2	4'-0"	12'-0"	3	3'-0"	7'-0"			
21'-0"				3	3'-3"	7'-3"	4	2'-0"	5'-8"
22'-0"				3	3'-4"	7'-8"	4	2'-0"	6'-0"
23'-0"				3	3'-6"	8'-0"	4	2'-0"	6'-4"
24'-0"				3	3'-8"	8'-4"	4	2'-0"	6'-8"
25'-0"				3	4'-0"	8'-6"	4	2'-0"	7'-0"
26'-0"				3	4'-0"	9'-0"	4	2'-0"	7'-4"
27'-0"				3	4'-0"	9'-6"	4	2'-0"	7'-8"
28'-0"				3	4'-0"	10'-0"	4	2'-0"	8'-0"
29'-0"				3	4'-0"	10'-6"	4	2'-0"	8'-4"
30'-0"				3	4'-0"	11'-0"	4	2'-0"	8'-8"

TYPICAL PANEL FABRICATION AND MOUNTING DETAILS

PANEL MOUNTING

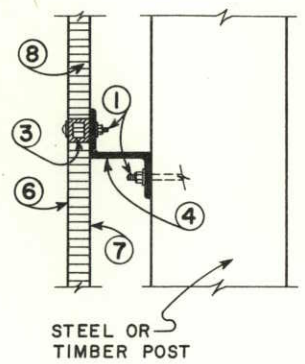

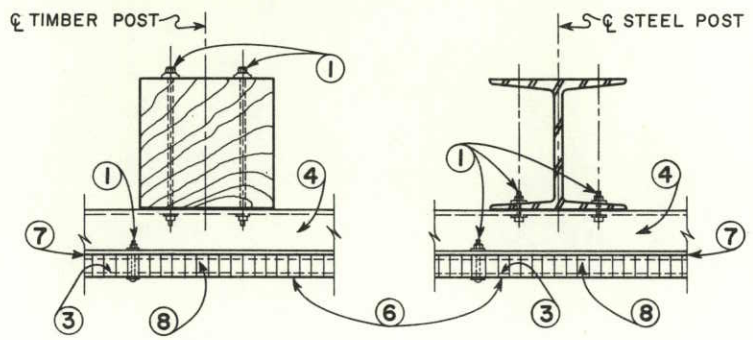

PANEL SECTION

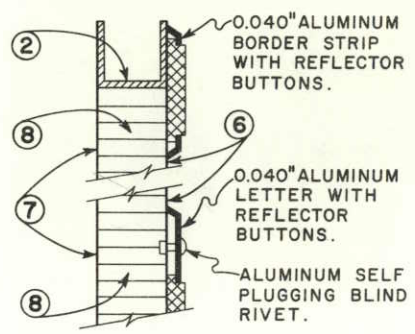

SEAM CLOSURE

(Vertical Seam)

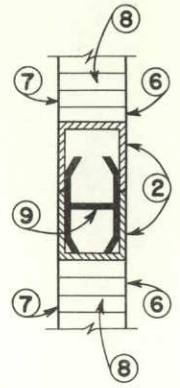

FABRICATION NOTES

1. 3/8"ø BOLTS. Panel to Backing Zee : maximum spacing between bolts shall be 9". Backing Zee to Post : minimum of 2 bolts per backing zee per post.
2. PERIMETER FRAME. 1"x 1"x 1/16" extruded aluminum channel.
3. SUPPORT TUBE. 1"x 1"x 1/16" extruded aluminum tubing.
4. BACKING ZEE. 3"x 2 11/16"x 2.33, Aluminum Alloy 6061-T6. Each Zee to be provided with a 9/16"x 2" horizontal slot for each post mounting bolt. The length of each Zee to be 1' less than the sign panel width.
5. WEEP HOLE. Three 1/8" weep holes to be provided in the perimeter frame at the bottom of each section. They shall be spaced approximately 3" from each end and in the center of the section.
6. FACE SHEET. 0.063" Aluminum Sheet.
7. BACK SHEET. 0.040" Aluminum Sheet.
8. CORE. 1" Phenolic Impregnated Honeycombed Core.
9. ALIGNMENT EXTRUSION. 0.062" Aluminum Extrusion.

TYPICAL DETAIL EXIT NUMBER PANEL

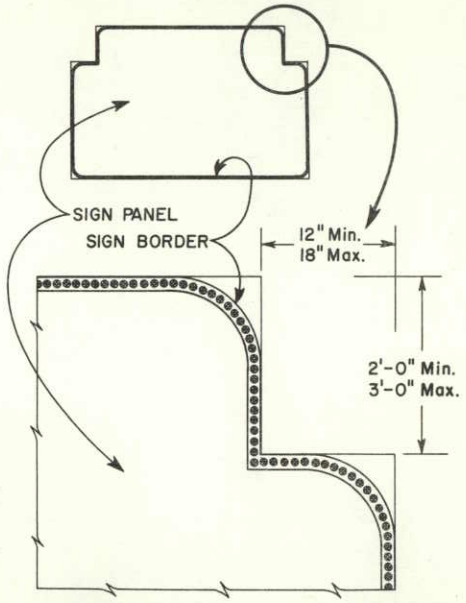

TYPICAL POST SPACING

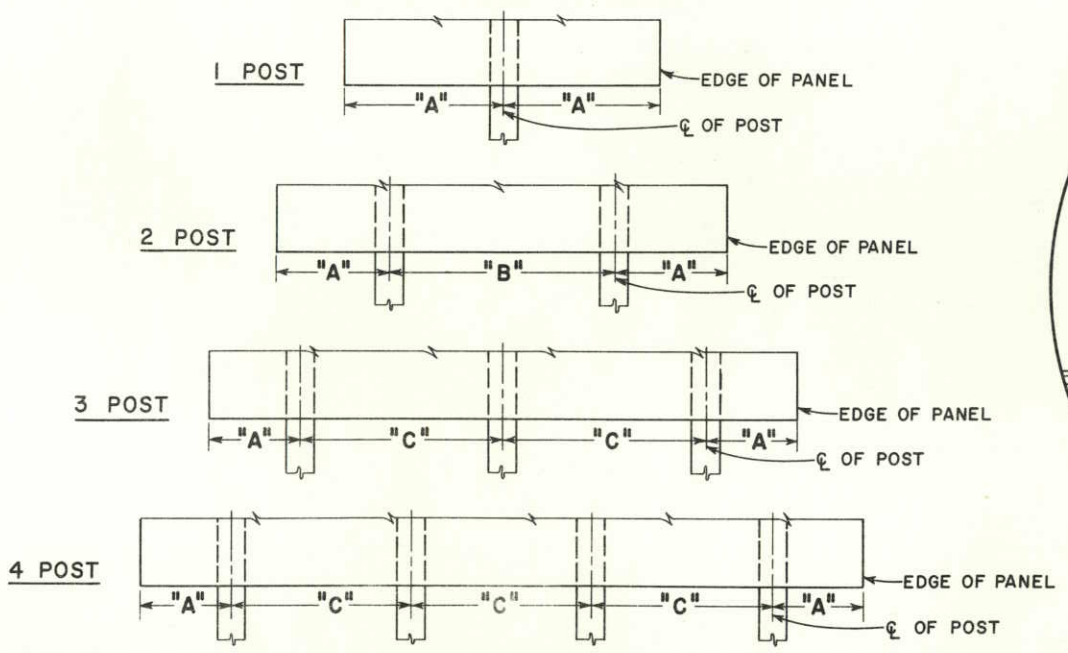

TYPICAL ELEVATION DETAIL

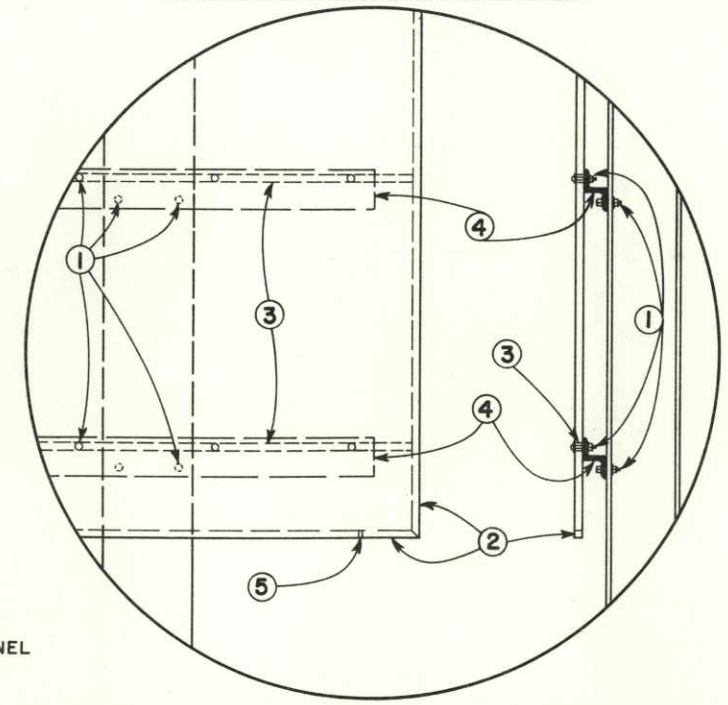

TYPICAL DETAIL SEAM CLOSURE ZEE

(Multi-Vertical Sections, Horizontal Seam)

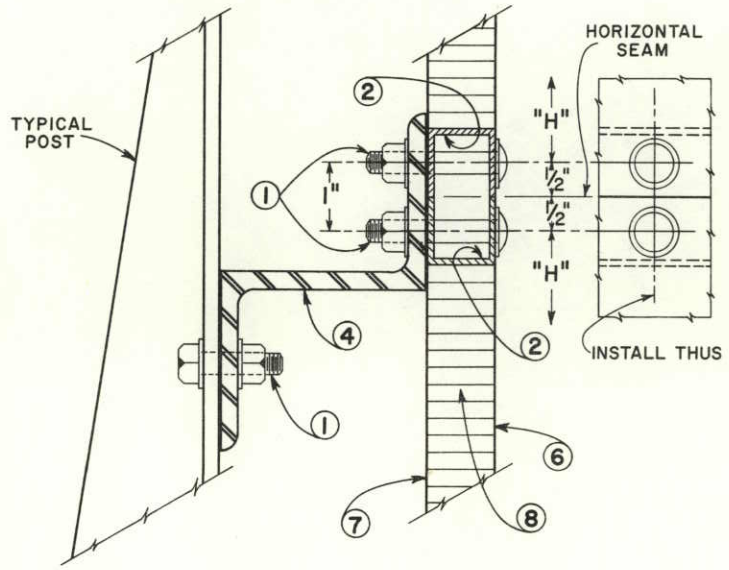

DEPARTMENT OF HIGHWAYS
STATE OF COLORADO
DIVISION OF HIGHWAYS

LAMINATED ALUMINUM PANELS AND POST SPACING TABLE FOR CLASS III SIGNS

Designed By : J.J.B.	Approved By: [signature]
Made By : F.J.B.	Traffic Engineer
Checked By : J.L.S.	Date: Oct. 20, 1969

STANDARD S-614-26C

(SHEET 1 OF 2 SHEETS)

APRIL 11, 1973

FEDERAL ROAD REGION NO.	DIVISION	PROJ. NO.	SHEET NO.	TOTAL SHEETS
VIII	COLORADO			

REVISIONS			
(R-1)	5-2-74	Rev. Note	J.D.S.

TYPICAL ELEVATION STEEL POST ASSEMBLY

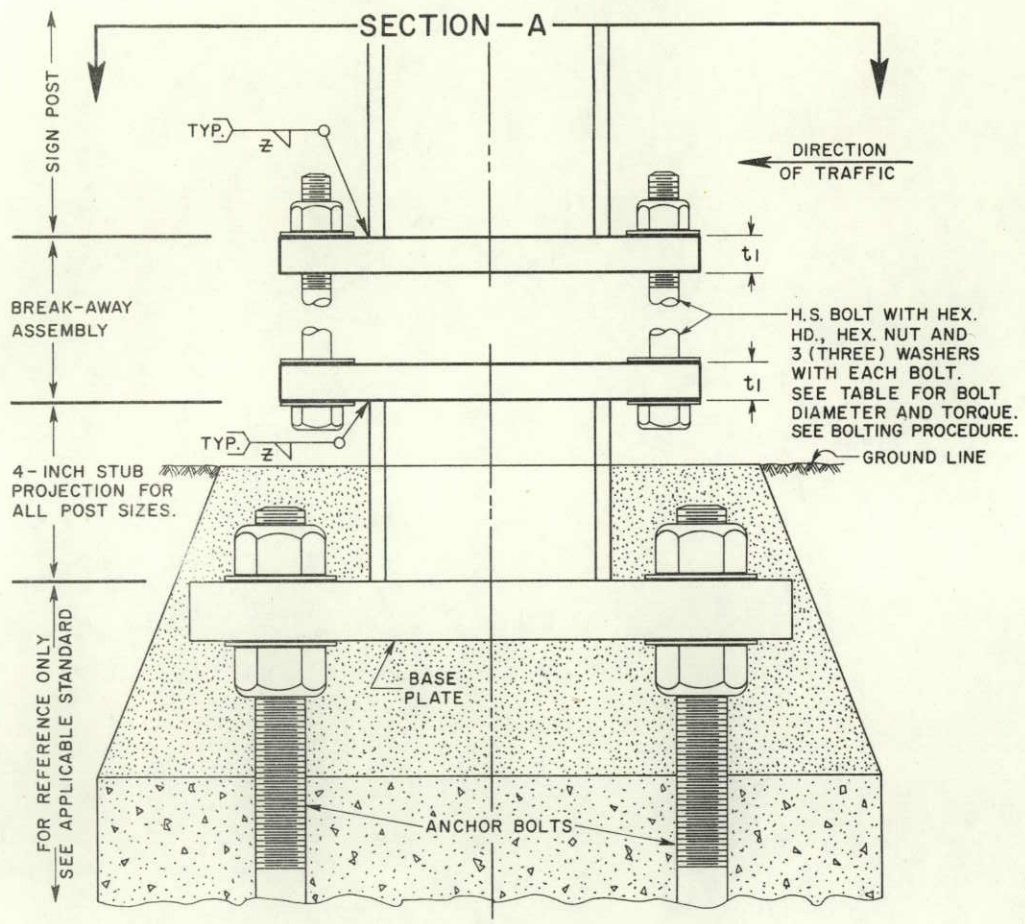

TYPICAL BREAK-AWAY SIGN SUPPORT INSTALLATIONS

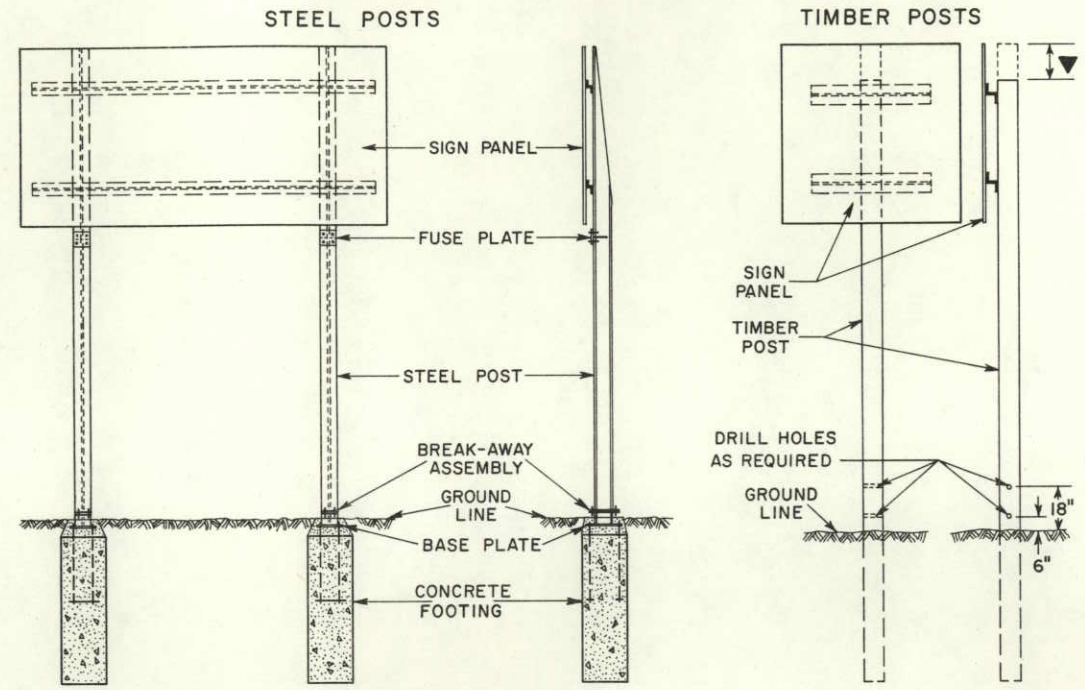

TYPICAL PROJECTED VIEW STEEL POST ASSEMBLY

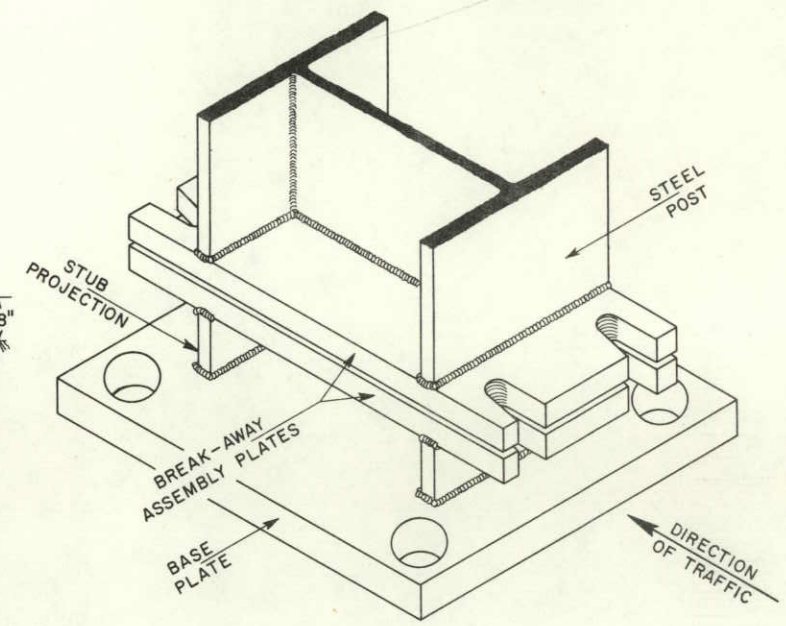

TYPICAL SECTION -A-

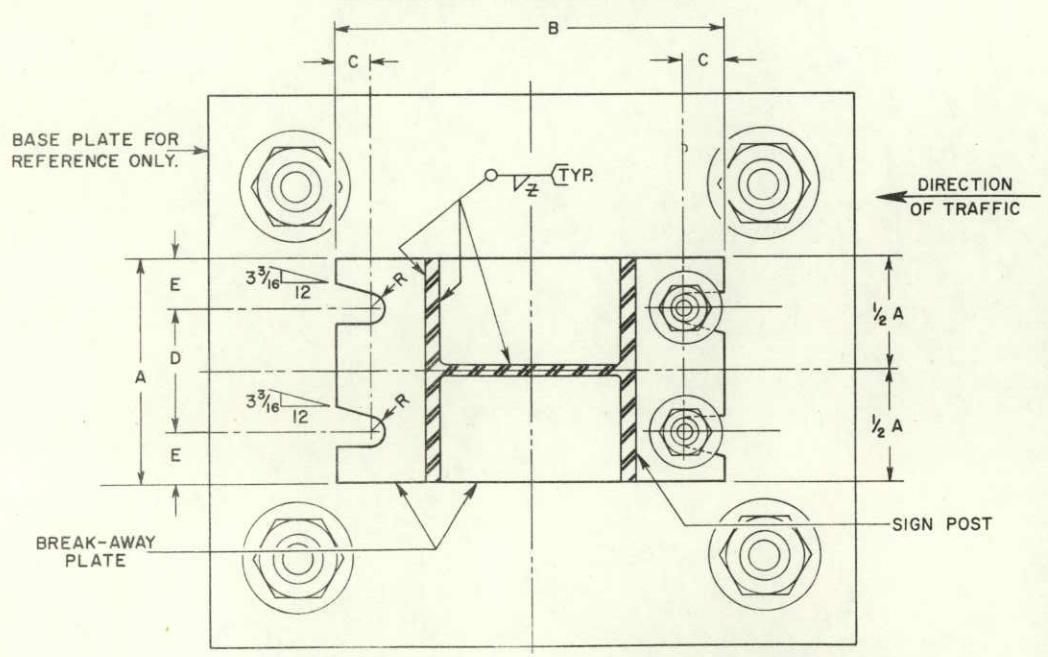

SECTION SHOWN IS FOR INSTALLATION ON RIGHT SHOULDER AND IN GORE. PLATE SLOT BEVELS ARE OPPOSITE HAND FROM THAT REQUIRED FOR INSTALLATION ON LEFT SHOULDER.

GENERAL NOTES

1. All work shall be done in accordance with the Standard Specifications applicable to the Project.
2. Design conforms with AASHO "Specifications for the Design and Construction of Structural Supports for Highway Signs".
3. All structural steel shall conform to ASTM – A36 and Section 509 of the Standard Specifications.
4. Notched steel fuse plates shall conform to the requirements of ASTM – A36.
5. All high strength bolts, nuts and washers shall conform to ASTM – A325.
6. All bolts other than high strength bolts shall conform to ASTM – A307.
7. All bolts, nuts, and washers shall be galvanized as per ASTM – A153 or ASTM – A164.
8. All holes shall be drilled.
9. All steel cuts shall preferably be saw cuts; however, flame cutting will be permitted, provided all edges are ground. Remove all burrs. Metal shall not project beyond the plane of the plate face.
10. High strength bolts in the break-away assembly shall be tightened only to the torque shown in the table. DO NOT OVERTIGHTEN.
11. (R-1) The "STUB POST" and one "BREAK-AWAY PLATE" are considered part of the footing. The other "BREAK-AWAY PLATE" and all nuts, bolts and washers for fastening the break-away plates are considered a part of the post.
12. Timber posts shall be in accordance with Section 614 of the Standard Specifications as to Size, Alternate Size, Grade, Species, Treatment, and Break-Away Holes.
13. For all base plate and footing work see the applicable Standard included in the plans.
14. For additional information, refer to "Tabulation of Signs" and "Cross Sections for Class III Signs" included in the plans.
15. ▼ Timber post flush with top of sign panel for direct mount and 3 3/16" minimum above bolt for backing zee mount.

BREAK-AWAY PLATE DATA TABLE

POST SIZE \ DIMENSION	BOLT SIZE AND TORQUE	A	B	C	D	E	t1	WELD z	R	STUB POST LENGTH
W 12 x 40	7/8" ø x 3 3/4" 1,135 In. Lb.	8"	19 1/4"	1 5/8"	4"	2"	1 1/4"	3/8"	15/32"	0'-4"
W 12 x 31	3/4" ø x 3 1/2" 750 In. Lb.	6 1/2"	16 5/8"	7/8"	3 1/2"	1 1/2"	1"	5/16"	13/32"	0'-4"
W 10 x 25		5 3/4"	14 5/8"	7/8"	3 1/4"	1 1/4"	1"	5/16"	13/32"	0'-4"
W 10 x 21		5 3/4"	14 3/8"	7/8"	3 1/4"	1 1/4"	1"	5/16"	13/32"	0'-4"
W 8 x 20		5 1/4"	12 5/8"	7/8"	2 3/4"	1 1/4"	1"	5/16"	13/32"	0'-4"
W 8 x 17	5/8" ø x 2 3/4" 450 In. Lb.	5 1/4"	12"	3/4"	3"	1 1/8"	3/4"	1/4"	11/32"	0'-4"
W 6 x 15.5		6"	10"	3/4"	3 3/4"	1 1/8"	3/4"	1/4"	11/32"	0'-4"
W 6 x 12		5"	10"	3/4"	2 3/4"	1 1/8"	3/4"	1/4"	11/32"	0'-4"

BOLTING PROCEDURE FOR BREAK-AWAY PLATE ASSEMBLY

1. Assemble post to stub with bolts and with one flat washer on each bolt top, bottom, and between the break-away plates.
2. Tighten all bolts to a "snug tight" condition with a 12" to 15" wrench to bed washers and to clean bolt threads, then loosen each bolt in turn and retighten in a systematic order to the prescribed torque. (See Break-Away Plate Data Table)
3. Burr threads at junction with nut using a center punch to prevent nut loosening.

DEPARTMENT OF HIGHWAYS
STATE OF COLORADO
DIVISION OF HIGHWAYS

BREAK-AWAY SIGN SUPPORT DETAILS FOR GROUND SIGNS

Designed By: G.W.F.	Approved By: [signature]
Made By: F.J.B.	Traffic Engineer
Checked By: J.D.S.	Date April 11, 1973

STANDARD S-614-26C

(SHEET 2 OF 2 SHEETS)

APRIL 11, 1973

FEDERAL ROAD REGION NO.	DIVISION	PROJ. NO.	SHEET NO.	TOTAL SHEETS
VIII	COLORADO			

REVISIONS			
(R-1)	5-2-74	Rev. Note on Sheet No. 1	J.D.S.

TYPICAL SIDE VIEW FUSE PLATE AND POST COPE

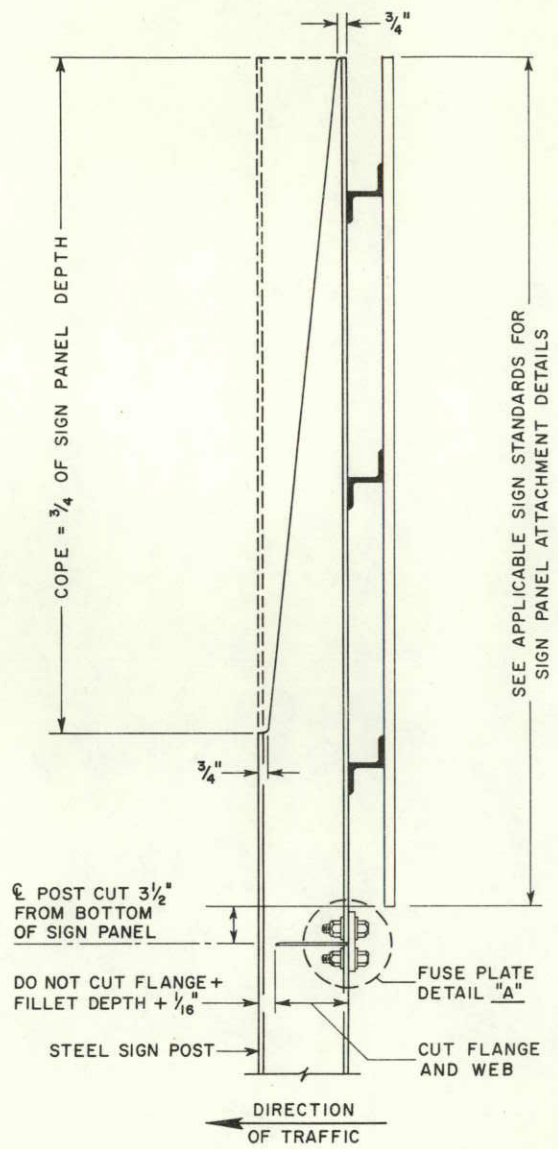

TYPICAL PROJECTED VIEW FUSE PLATE AND POST COPE

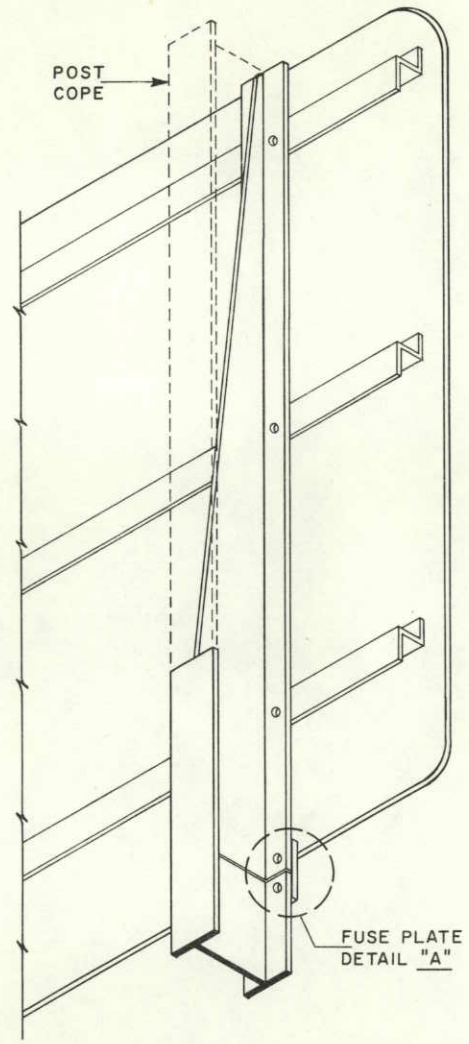

TYPICAL FUSE PLATE HINGE DETAILS

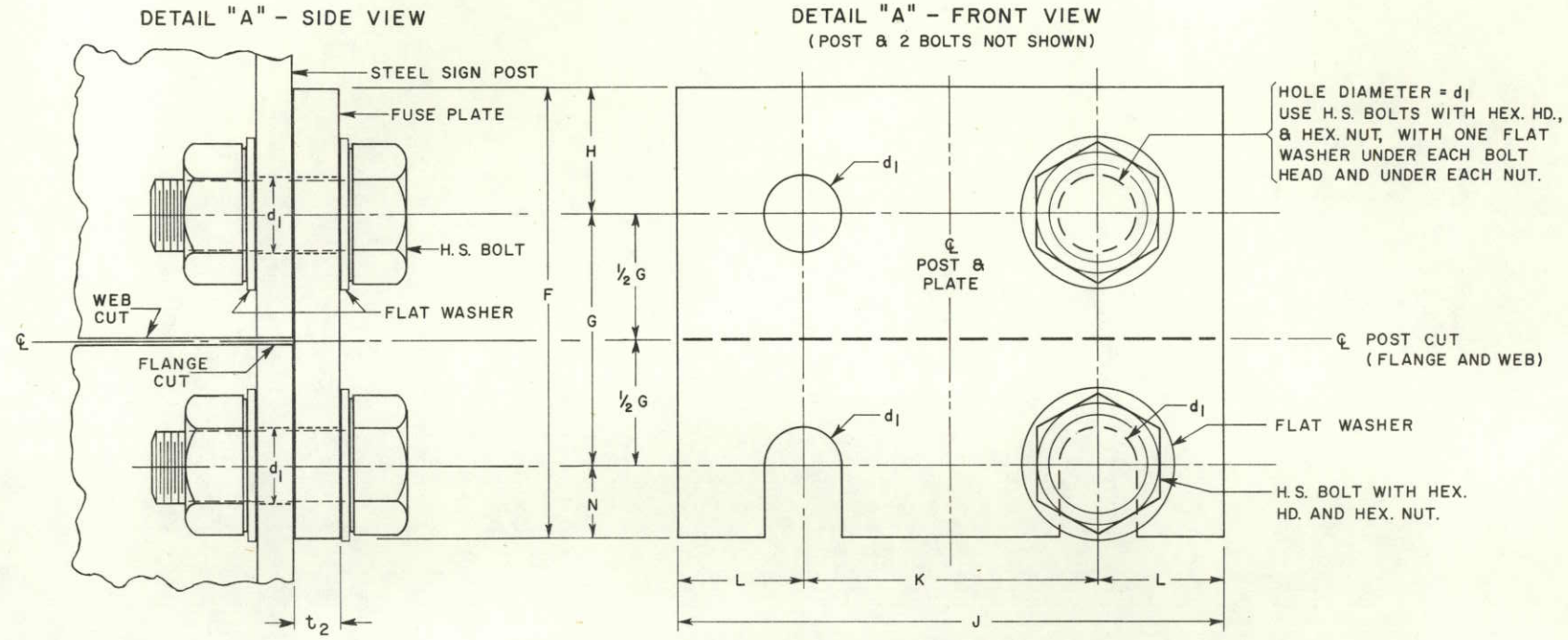

FUSE PLATE HINGE DATA TABLE

DIMENSION / POST SIZE	F	G	H	J	K	L	N	d_1	t_2	BOLT SIZE	MINIMUM RESIDUAL BOLT TENSION	FABRICATION NOTES
W 12 x 40	6"	3 1/4"	1 3/4"	8"	4"	2"	1"	15/16"	5/8"	7/8"ø x 2 1/2"	36,050 LBS.	Fuse plate and post flange holes shall be drilled. Install fuse plate with the notches toward the base of the post. IMPORTANT— All fuse plate hinge bolts shall be tightened in the shop following a method approved by the Engineer. Tightening shall be to such a degree as to obtain the minimum residual tension in each of the bolts.
W 12 x 31	5 3/8"	3"	1 1/2"	6 1/2"	3 1/2"	1 1/2"	7/8"	15/16"	9/16"	7/8"ø x 2 1/2"	36,050 LBS.	
W 10 x 25	5 3/8"	3"	1 1/2"	5 3/4"	2 3/4"	1 1/2"	7/8"	15/16"	9/16"	7/8"ø x 2 1/2"	36,050 LBS.	
W 10 x 21	5 3/8"	3"	1 1/2"	5 3/4"	2 3/4"	1 1/2"	7/8"	15/16"	9/16"	7/8"ø x 2 1/2"	36,050 LBS.	
W 8 x 20	4 7/8"	2 1/2"	1 1/2"	5 1/4"	2 3/4"	1 1/4"	7/8"	15/16"	9/16"	7/8"ø x 2 1/2"	36,050 LBS.	
W 8 x 17	4 1/2"	2 1/2"	1 1/4"	5 1/4"	2 3/4"	1 1/4"	3/4"	13/16"	1/2"	3/4"ø x 2"	28,400 LBS.	
W 6 x 15.5	4 1/2"	2 1/2"	1 1/4"	6"	3 1/2"	1 1/4"	3/4"	13/16"	1/2"	3/4"ø x 2"	28,400 LBS.	
W 6 x 12	3 3/4"	2"	1 1/8"	4"	2 1/4"	7/8"	5/8"	11/16"	3/8"	5/8"ø x 2"	19,200 LBS.	

DEPARTMENT OF HIGHWAYS
STATE OF COLORADO
DIVISION OF HIGHWAYS

BREAK-AWAY SIGN SUPPORT DETAILS FOR GROUND SIGNS

Designed By: G.W.F.
Made By: F.J.B.
Checked By: J.D.S.

Approved By: [signature]
Traffic Engineer
Date April 11, 1973

STANDARD S-614-27C

(SHEET 1 OF 2 SHEETS)

APRIL 11, 1973

FEDERAL ROAD REGION NO.	DIVISION	PROJ. NO.	SHEET NO.	TOTAL SHEETS
VIII	COLORADO			

REVISIONS			
R-1	5-2-74	Add Note on Sheet No. 2	J. D. S.
R-2	9-24-75	Rev. "D" for Ty. I Footing	J. D. S.

TYPICAL CONCRETE FOOTING ASSEMBLY

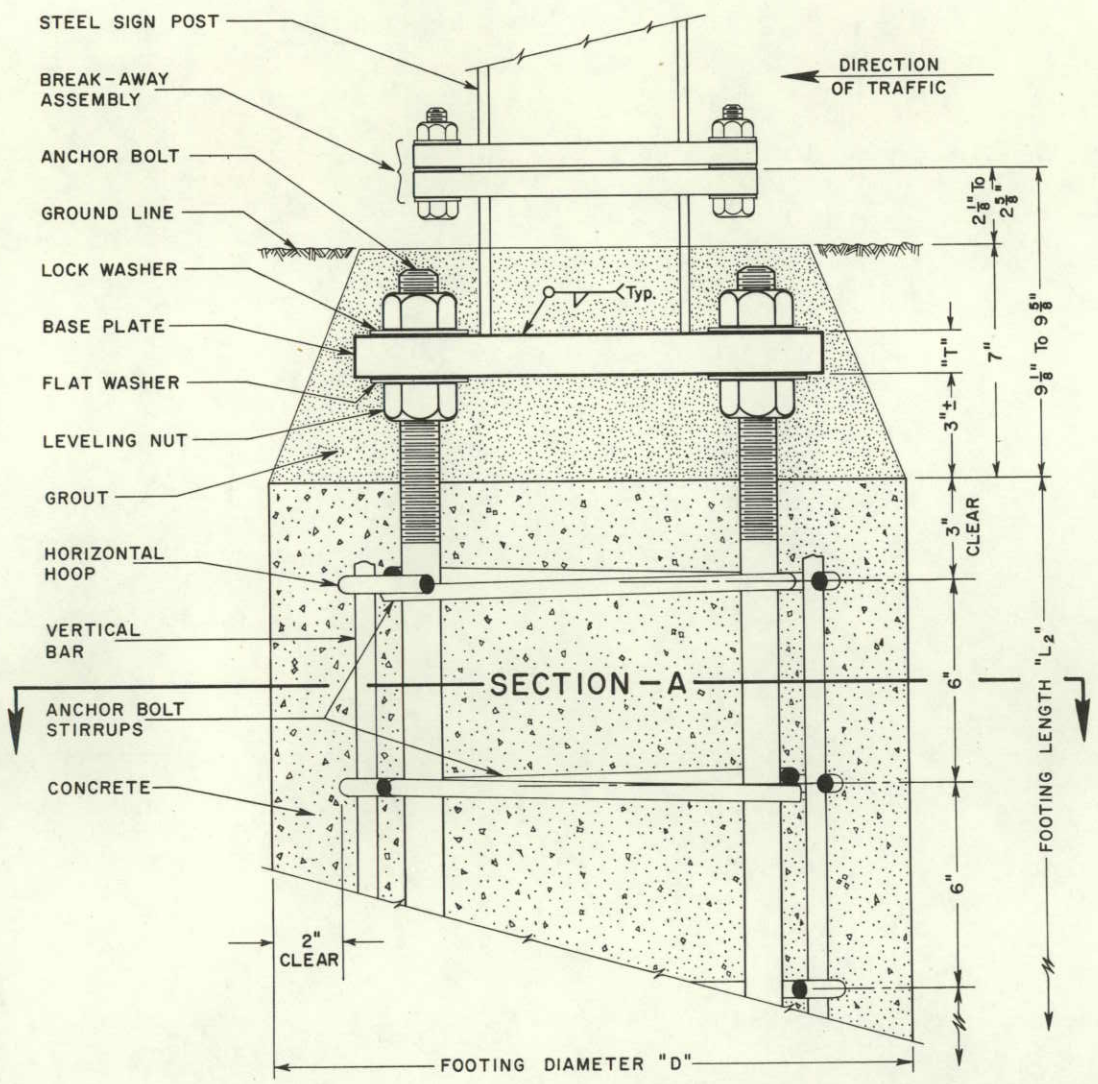

TYPICAL SECTION -A-

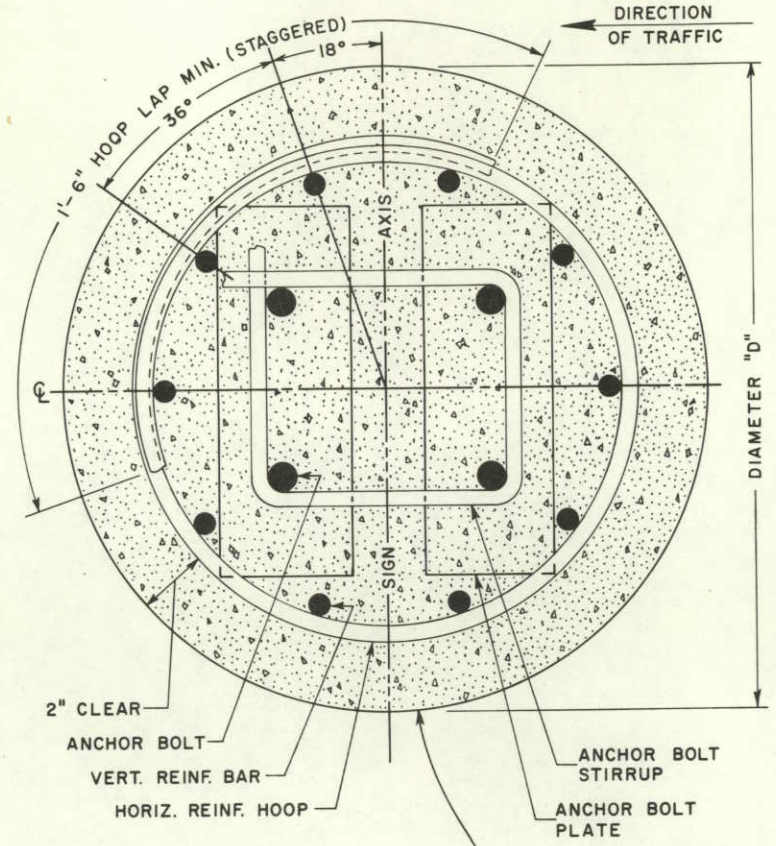

BASE PLATE TYPICAL DETAILS

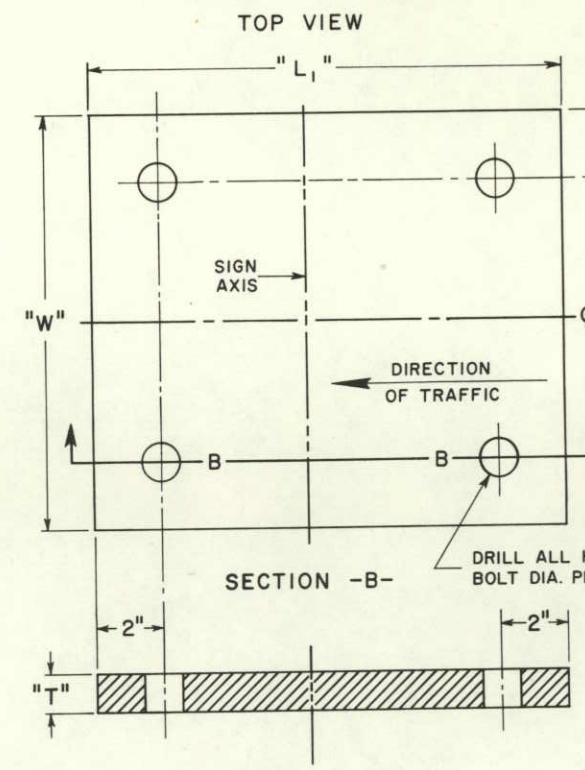

BOLT PLATE TYPICAL DETAILS

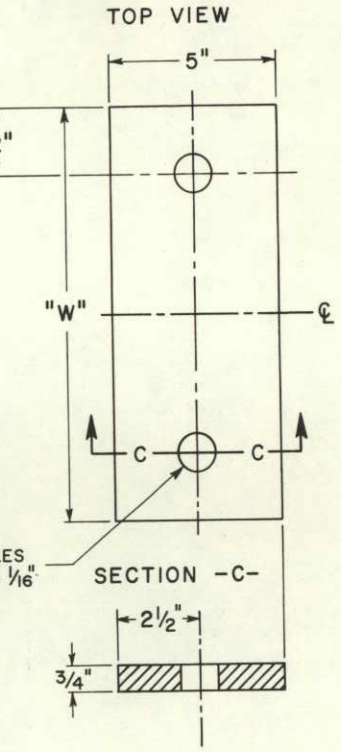

EXCAVATION PROCEDURE

DRILL TO O. D. OF FOOTING NEAT LINE AND TO DEPTH SHOWN, AND IN ACCORDANCE WITH THE STANDARD SPECIFICATIONS FOR DRILLED CAISSONS. (FOOTINGS SHALL BE CAST IN PLACE AGAINST UNDISTURBED MATERIAL.)

TYPICAL FOOTING INSTALLATION

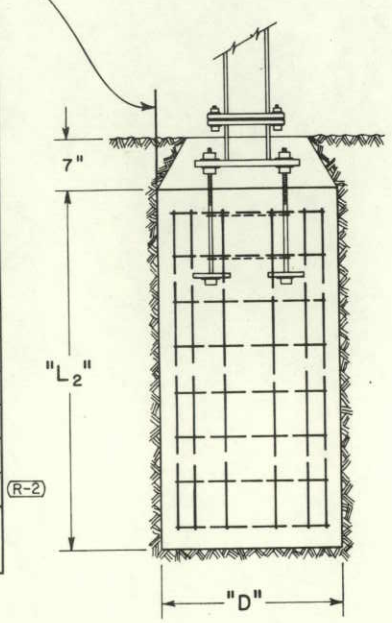

CONCRETE FOOTING TABLE

POST BASE STRUCTURAL DATA									FOOTING STRUCTURAL DATA				
SIZE	MAXIMUM ALLOWABLE MOMENT	POST TO BASE ℄ WELD	BASE PLATE			ANCHOR COMPONENTS			SIZE			REINFORCING	
			"L1"	"W"	"T"	ANCHOR BOLTS	BOLT PLATES	STIRRUPS	TYPE	"D"	"L2"	VERT. BAR	HORIZ. HOOP
W12x40	79.1 kip ft.	1/2" FILLET	21 1/4"	16"	1 3/4"	4-1 1/4"ϕ x 2'-6"	2-5"x 3/4"x 16"	2-1/2"ϕ	8	36"	11'	10-#10 x 10'-6"	22-#4@6"
W12x31	57.6 kip ft.	3/8" FILLET	19 3/4"	14"	1 3/8"	4-1 1/8"ϕ x 2'-6"	2-5"x 3/4"x 14"	2-1/2"ϕ	7	36"	10'	10-#9 x 9'-6"	20-#4@6"
W10x25	36.9 kip ft.	3/8" FILLET	16 1/4"	14"	1 1/4"	4-1"ϕ x 2'-6"	2-5"x 3/4"x 14"	2-1/2"ϕ	6	30"	9'	10-#9 x 8'-6"	18-#4@6"
W10x21	29.9 kip ft.	3/8" FILLET	16 1/4"	14"	1 1/4"	4-1"ϕ x 2'-6"	2-5"x 3/4"x 14"	2-1/2"ϕ	5	30"	8'	10-#8 x 7'-6"	16-#4@6"
W8x20	22.7 kip ft.	3/8" FILLET	14"	13 1/4"	1 1/8"	4-7/8"ϕ x 2'-0"	2-5"x 3/4"x 13 1/4"	2-1/2"ϕ	4	24"	7'	10-#8 x 6'-6"	14-#4@6"
W8x17	18.8 kip ft.	3/8" FILLET	14"	13 1/4"	1 1/8"	4-7/8"ϕ x 2'-0"	2-5"x 3/4"x 13 1/4"	2-1/2"ϕ	3	24"	6'	10-#7 x 5'-6"	12-#4@6"
W6x15.5	14.2 kip ft.	3/8" FILLET	14"	12 1/4"	1"	4-3/4"ϕ x 1'-6"	2-5"x 3/4"x 12 1/4"	2-1/2"ϕ	2	24"	5'	10-#6 x 4'-6"	10-#4@6"
W6x12	8.3 kip ft.	1/4" FILLET	13"	12"	7/8"	4-3/4"ϕ x 1'-6"	2-5"x 3/4"x 12"	2-1/2"ϕ	1	24"	4'	10-#5 x 3'-6"	8-#4@6"
6x6 TIMBER	5.0 kip ft.	TIMBER POST SHALL BE SET IN DRILLED OR EXCAVATED HOLES -- DEPTH SHALL BE 5' FOR 6x6 POST (Unless otherwise noted on the tabulation in the plans) AND 3' FOR 4x4 POST. POSTS SHALL BE PLACED PLUMB, BACKFILLED WITH EXCAVATED MATERIALS, AND THOROUGHLY TAMPED INTO PLACE.											
4x4 TIMBER	1.4 kip ft.												

(R-2)

GENERAL NOTES

1. ALL WORK SHALL BE DONE IN ACCORDANCE WITH THE STANDARD SPECIFICATIONS APPLICABLE TO THE PROJECT.
2. ALL CONCRETE IS TO BE CLASS "A" OR CLASS "B". GROUT SHALL CONFORM TO "JOINT MORTAR".
3. ANCHOR BOLTS PROJECT ABOVE FOOTING 4", PLUS BASE PLATE THICKNESS, PLUS BOLT DIAMETER. THREAD UPPER PORTION -- PROJECTION PLUS 2"±. GALVANIZE UPPER PORTION -- PROJECTION PLUS 4"±.
4. USE ASTM-A36 STEEL FOR BASE PLATES AND BOLT PLATES. USE ASTM-A307 STEEL FOR ANCHOR BOLTS.
5. USE GRADE 40 FOR REINFORCING STEEL VERTICAL BARS, HORIZONTAL HOOPS, AND ANCHOR BOLT STIRRUPS.
6. FOR ALL STEEL WORK ABOVE THE BASE PLATE, AND FOR ANGULAR PLACEMENT OF SIGNS, SEE APPLICABLE STANDARDS INCLUDED IN THE PLANS.
7. FOR ADDITIONAL INFORMATION, REFER TO "TABULATION OF SIGNS" AND "CROSS SECTIONS FOR CLASS III SIGNS" INCLUDED IN THE PLANS.
8. ALTERNATE FOOTING DESIGNS ARE AVAILABLE FROM THE TRAFFIC ENGINEER FOR FOOTINGS IN ROCK.

CONT'D. SHEET 2.

DEPARTMENT OF HIGHWAYS
STATE OF COLORADO
DIVISION OF HIGHWAYS

CONCRETE FOOTINGS AND SIGN ISLANDS FOR CLASS III SIGNS

Designed By: J. E. S.
Made By: F. J. B.
Checked By: J. D. S.

Approved By: [signature] Traffic Engineer
Date April 11, 1973

STANDARD S-614-27C

(SHEET 2 OF 2 SHEETS)

APRIL 11, 1973

FEDERAL ROAD REGION NO.	DIVISION	PROJ. NO.	SHEET NO.	TOTAL SHEETS
VIII	COLORADO			

REVISIONS			
R-1	5-2-74	Add Note	J. D. S.
R-2	9-24-75	Rev. Table on Sheet No. 1	J. D. S.

DETAILS OF SIGN PLACEMENT

TYPICAL SIGN ISLAND PLAN

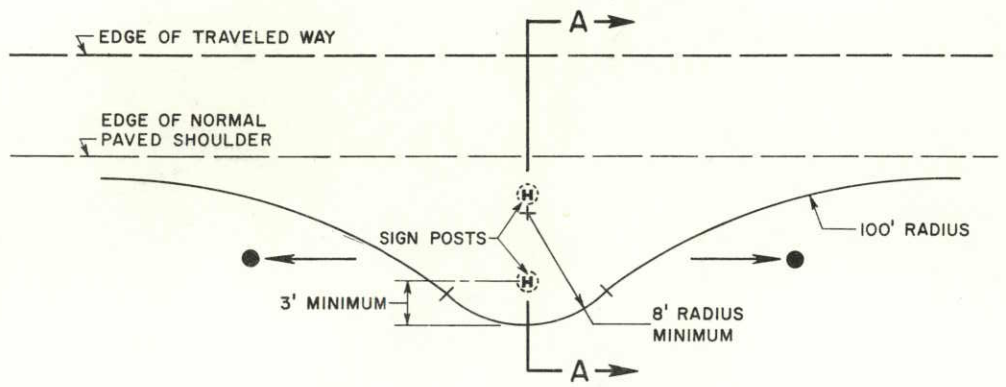

MAXIMUM CLEARANCE PLAN

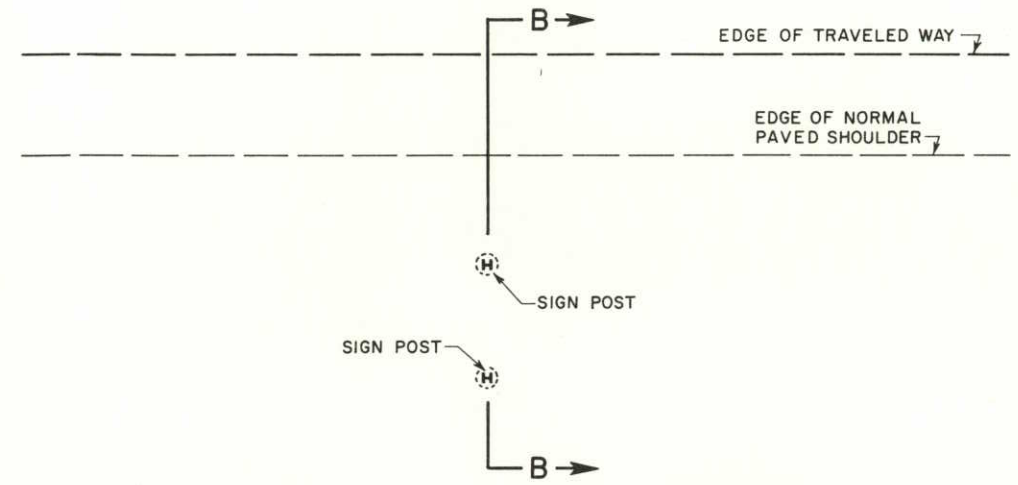

TYPICAL FILL SECTION : A-A

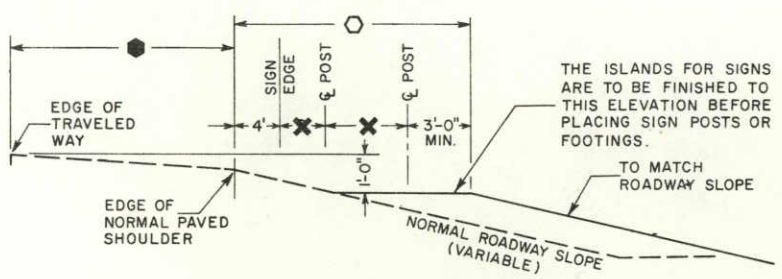

TYPICAL FILL SECTION : B-B

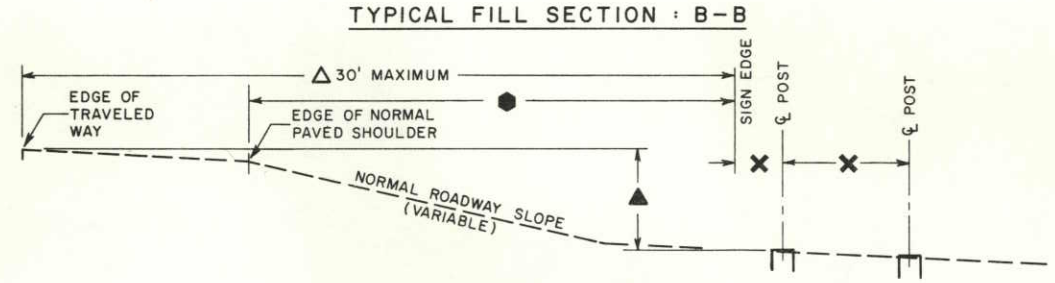

TYPICAL CUT SECTION : A-A

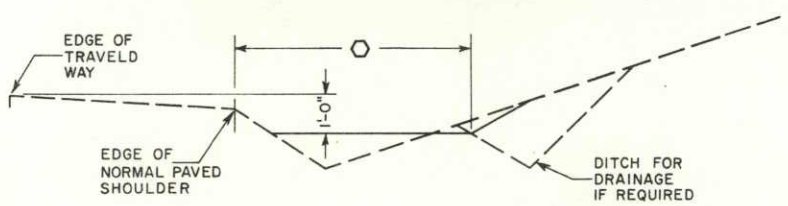

TYPICAL CUT SECTION : B-B

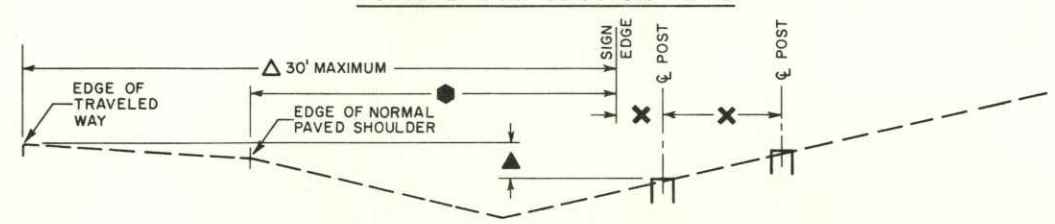

TYPICAL SIGN ISLAND ELEVATIONS

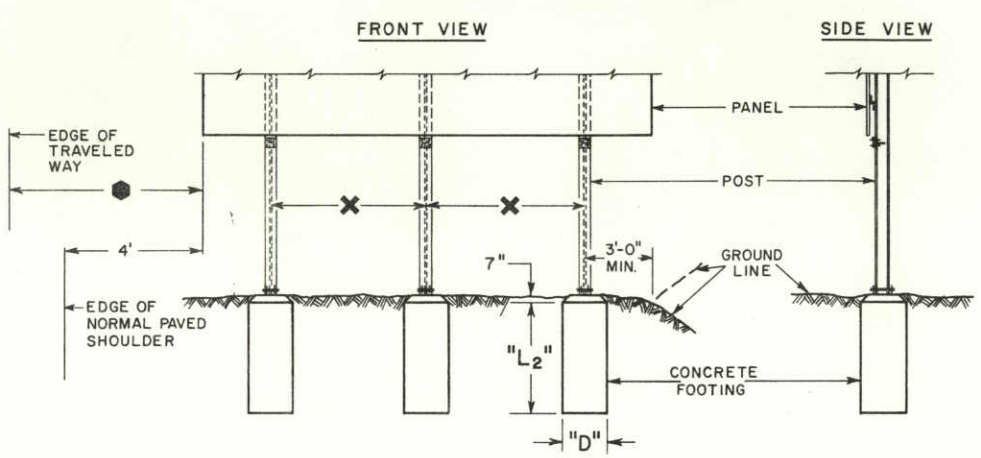

TYPICAL ELEVATIONS

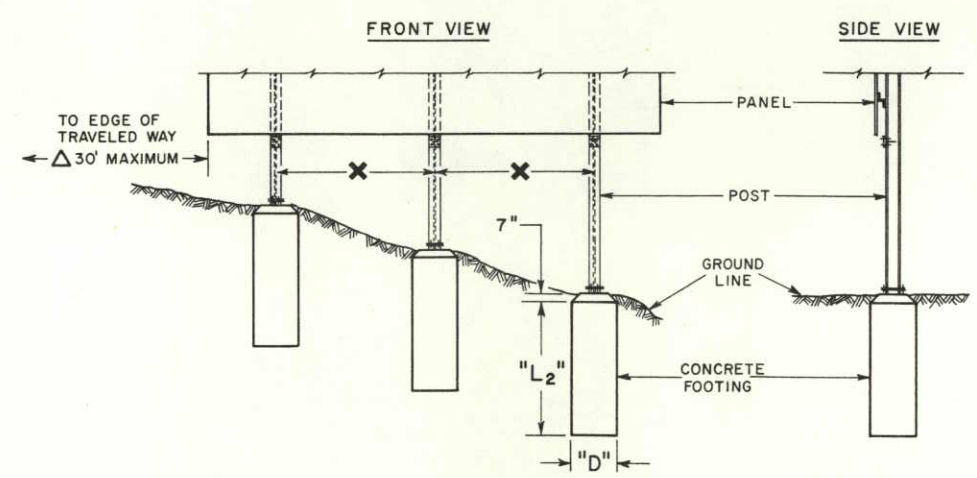

GENERAL NOTES CONT'D.

9. ✕... FOR DIMENSIONS SEE APPLICABLE STANDARD INCLUDED IN THE PLANS.

10. ●... THE SIGN ISLAND SIDE SLOPE PARALLEL TO THE ROADWAY SHALL BE 4:1 OR FLATTER.

11. ○... VARIABLE, SEE SIGN ISLAND WIDTH COLUMN IN "TABULATION OF SIGNS" INCLUDED WITH THE PLANS, OR SEE APPLICABLE STANDARD.

12. ⬢... VARIABLE DIMENSION, SEE CROSS SECTIONS.

13. ▲... VARIABLE FOOTING ELEVATIONS, SEE CROSS SECTIONS FOR PLACEMENT.

14. △... THE LATERAL PLACEMENT MAY BE REDUCED TO A MINIMUM OF 4 FEET FROM THE EDGE OF NORMAL PAVED SHOULDED TO FIT FIELD CONDITIONS WHEN THE DESIRABLE 30 FOOT MAXIMUM PLACEMENT IS NOT FEASIBLE. SEE THE CROSS SECTIONS.

15. ..... EMBANKMENT FOR SIGN ISLANDS IS TO BE COMPACTED AS REQUIRED UNDER ITEM 203 OF THE STANDARD SPECIFICATIONS.

16. ..... FOR ANGULAR PLACEMENT OF SIGNS, SEE APPLICABLE STANDARD.

(R-1) 17. THE "STUB POST" AND ONE "BREAK-AWAY PLATE" ARE CONSIDERED PART OF THE FOOTING. THE OTHER "BREAK-AWAY PLATE" AND ALL NUTS, BOLTS AND WASHERS FOR FASTENING THE BREAK-AWAY PLATES ARE CONSIDERED A PART OF THE POST.

DEPARTMENT OF HIGHWAYS
STATE OF COLORADO
DIVISION OF HIGHWAYS

CONCRETE FOOTINGS AND SIGN ISLANDS FOR CLASS III SIGNS

Designed By: J. E. S.	Approved By: [signature]
Made By: F. J. B.	Traffic Engineer
Checked By: J. D. S.	Date April 11, 1973

STANDARD S-614-31C

NOVEMBER 18, 1970

FEDERAL ROAD REGION NO.	DIVISION	PROJ. NO	SHEET NO.	TOTAL SHEETS
9	COLORADO			

REVISIONS			
R-1	11-16-71	Rev. Sign Codes	J.D.S.

STATE ROUTE MARKERS

FOR INDEPENDENT USE
OR USE AS SHIELDS ON GUIDE SIGN PANELS

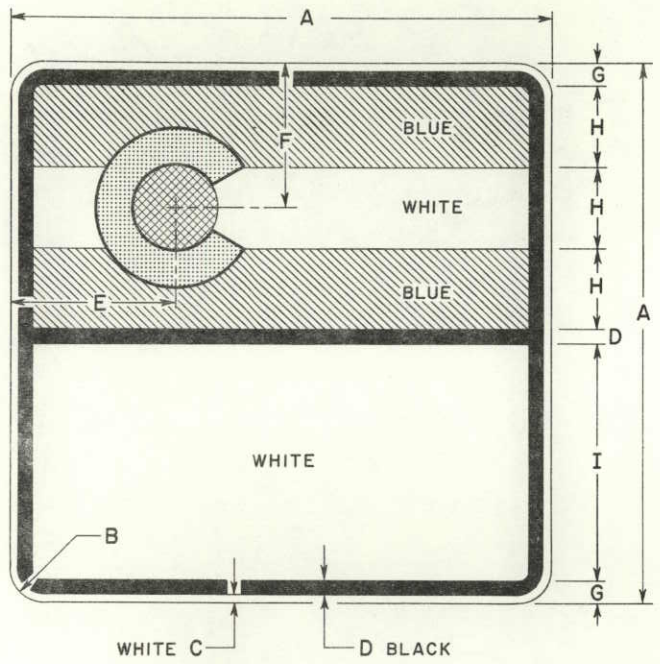

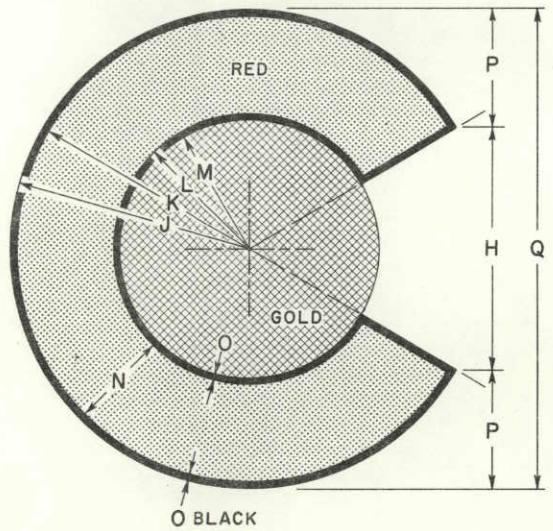

U. S. ROUTE MARKERS

PLAQUE BASIC DESIGN

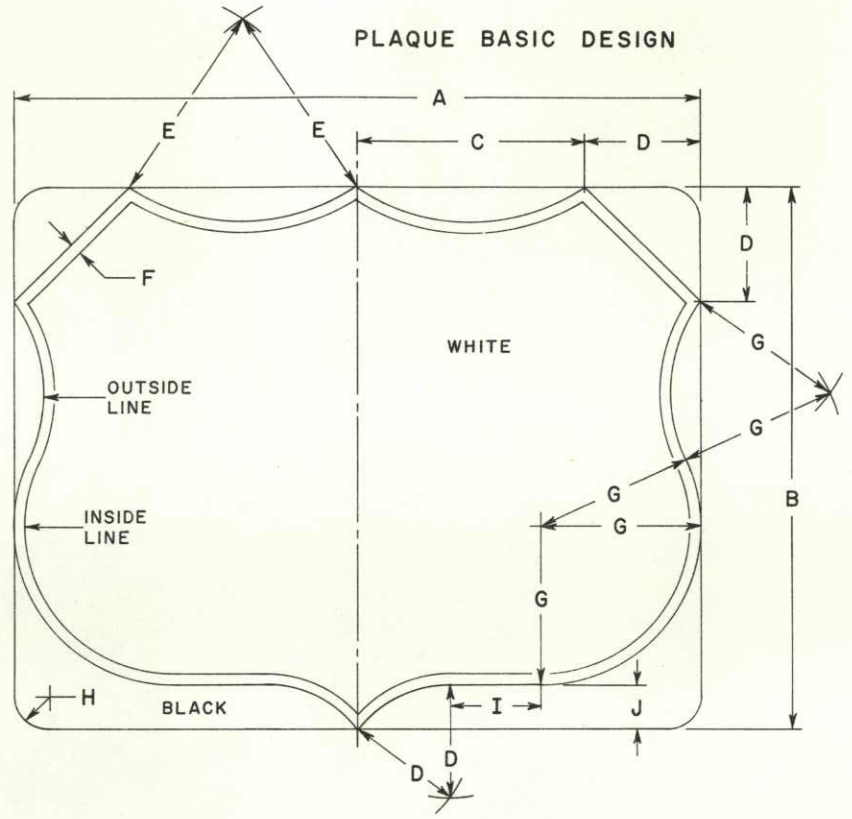

NOTE: All dimensions in inches.

CODE		A	B	C	D	E	F	G	H	I	J	K	L●	M	CODE	
XMI-4A-24( )	1 or 2 DIGIT	24	24	7	5	5	1/2	7	1 1/2	1	2	5 1/2	12	6 1/2	1 or 2 DIGIT	SMI-4-24( )
	3 DIGIT	30	24	10	5	9	1/2	7	1 1/2	4	2	5 1/2	12	6 1/2	3 DIGIT	
XMI-4A-36( )	1 or 2 DIGIT	36	36	10 1/2	7 1/2	7 1/2	3/4	10 1/2	2	1 1/2	3	8 1/4	18	9 3/4	1 or 2 DIGIT	XMI-4-36( )
	3 DIGIT	45	36	15	7 1/2	13 1/2	3/4	10 1/2	2	5 1/2	3	8 1/4	18	9 3/4	3 DIGIT	
XMI-4A-48( )	1 or 2 DIGIT	48	48	14	10	10	1	14	—	2	4	11	24	13	—	
	3 DIGIT	60	48	20	10	18	1	14	—	8	4	11	24	13	—	

MI-4A
FOR USE AS SHIELDS
ON GUIDE SIGN PANELS

MI-4-
FOR INDEPENDENT USE

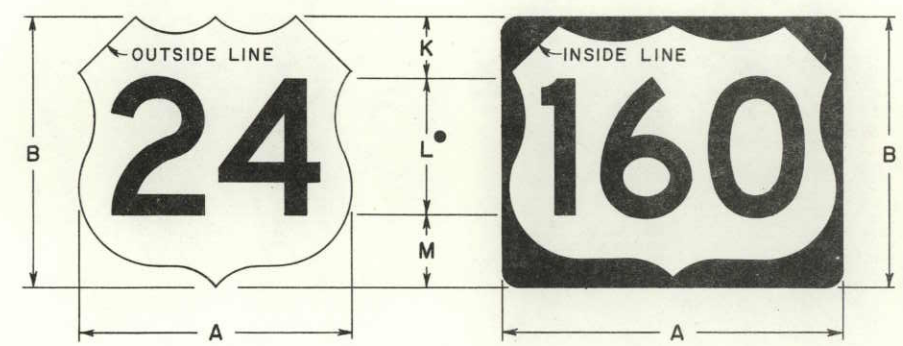

NOTE: All dimensions in inches.

CODE	A	B	C	D	E	F	G	H	I	J	K	L	M	N	O	P	Q	RTE. NUM. ▲ 1 or 2 DIGIT	RTE. NUM. ✱ 3 DIGIT
XMI-6-24( )	24	1 1/2	3/8	5/8	7 3/8	6 7/16	1	3 5/8	10 1/2	3 9/16	3 15/32	2	1 29/32	1 15/32	3/32	1 3/4	7 1/8	8" "E"	8" "D"
XMI-6-30( )	30	1 7/8	1/2	3/4	9 7/32	8 3/64	1 1/4	4 17/32	13 5/32	4 29/64	4 21/64	2 1/2	2 3/8	1 53/64	1/8	2 3/16	8 29/32	10" "E"	10" "D"
XMI-6-36( )	36	2	5/8	7/8	11 1/16	9 21/32	1 1/2	5 7/16	15 13/16	5 11/32	5 3/16	3	2 27/32	2 3/16	5/32	2 5/8	10 11/16	12" "E"	12" "D"
XMI-6-42( )	42	2	5/8	7/8	12 7/8	11 1/16	1 1/2	6 3/8	19	6 1/4	6 1/16	3 1/2	3 5/16	2 9/16	3/16	3 1/16	12 1/2	14" "E"	14" "D"

GENERAL NOTES

1. All work shall be done in accordance with the Standard Specifications applicable to the Project.
2. Route markers for independent use shall be either sheet steel 0.0598" min. thick. or sheet aluminum 0.080" min. thick. for plaques 24" in height and 0.100" for plaques greater than 24" in height. Route markers used on guide sign panels shall be either sheet steel 0.0598" min. thick. or sheet aluminum 0.080" min. thick.
3. All reflective sheeting shall be Non-Exposed Lens Type.
4. All route markers shall have reflectorized white background and screen processed black legend and border.
5. The flag colors shall be correlated with specifications for the State Flag in 131-8-4 CRS, 1963.
6. Red, gold and blue shall be reflectorized (direct screened transparent paint on reflective white sheeting).
7. Route numerals are to be visually centered in the available background area.

●8. Series "D" standard numerals (in cases where these numerals cannot be accommodated within the space available they may be reduced to series "C" or as a second choice to the next smaller height commonly available).

✱9. Series "D" modified numerals (shall have a stroke width of 0.18 x letter height).

▲10. Series "E" modified numerals (shall have a stroke width of 0.18 x letter height).

11. The CODE number indicates type, shape, height and route.

EXAMPLE
XMI-4A-24(287)

XMI = Route Marker
4A = U.S. shield for guide sign panel
24 = 24 inch height
(287) = Route number 287 (3 digit)

DEPARTMENT OF HIGHWAYS
STATE OF COLORADO
DIVISION OF HIGHWAYS

U. S. & COLORADO
ROUTE MARKERS

Designed By: J. J. S.
Made By: F. J. B.
Checked By: J. J. B.
Approved By: [signature] Traffic Engineer
Date Nov. 18, 1970

STANDARD S-614-32B

MARCH 22, 1971

FEDERAL ROAD REGION NO.	DIVISION	PROJ. NO.	SHEET NO.	TOTAL SHEETS
9	COLORADO			

REVISIONS			
R-1	11-16-71	Rev. Sign Codes & Note Heading	J.D.S.

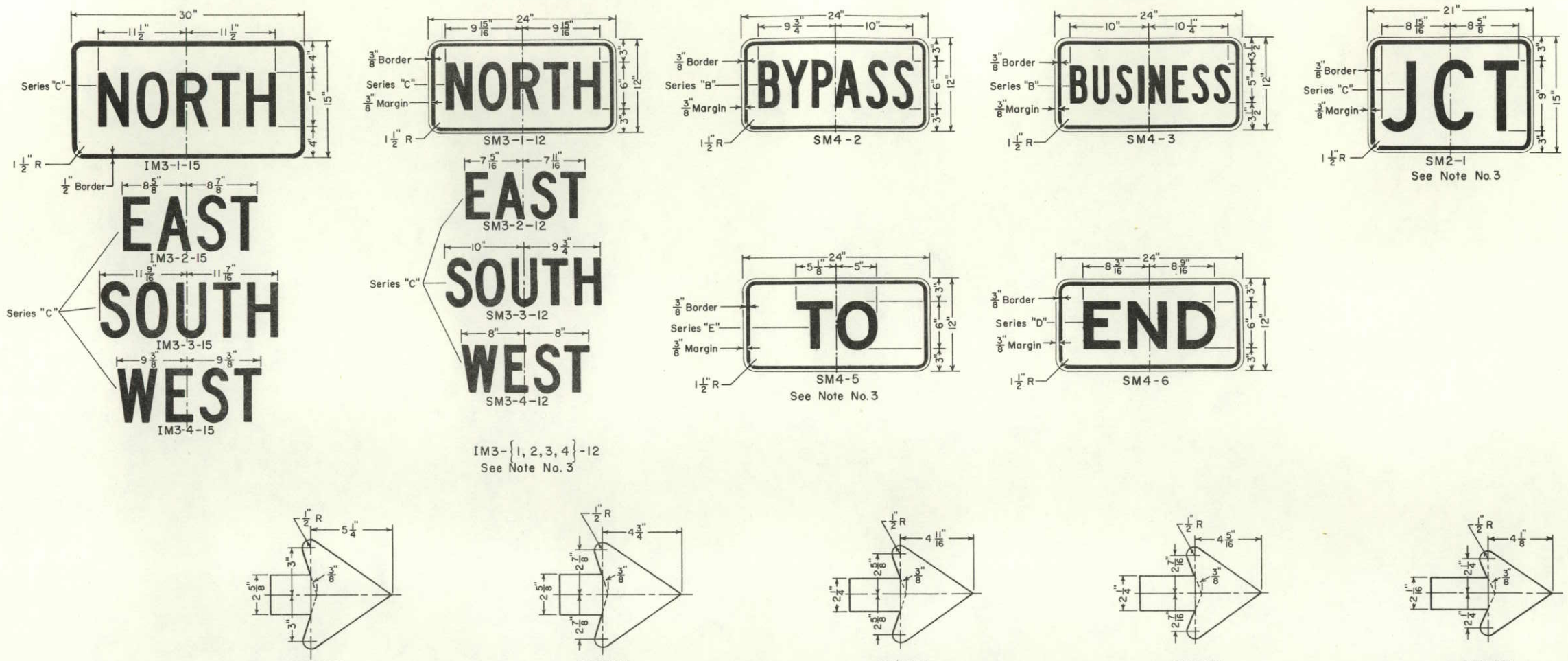

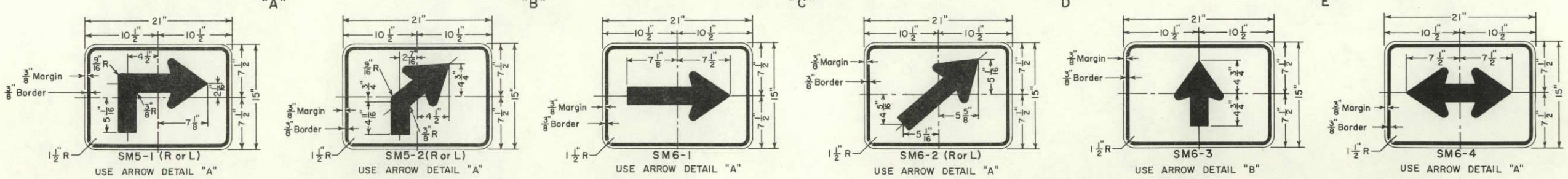

All arrow signs may be interstate type with prefix letter "I" in lieu of "S" See note no. 3

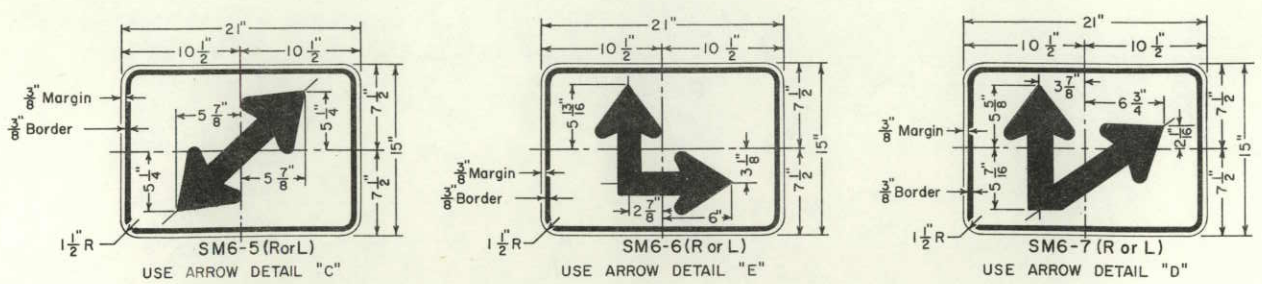

(R-1) GENERAL NOTES

1. All work shall be done in accordance with the Standard Specifications applicable to the Project.
2. Conventional or basic standard type signs denoted by the prefix letter "S" are as illustrated with a screen processed black legend and border on a reflectorized white background.
3. Interstate type signs denoted by the prefix letter "I" have a reflectorized white legend and border on a reflectorized blue background. (Reversed screened on reflective sheeting.) The margin is deleted and the border of the indicated width is placed at the panel edge. Legend design is otherwise identical to that of the corresponding basic standard.
4. Auxiliary markers shall be either steel sheets 0.0598" min. thickness or aluminum sheets 0.100" min. thickness.
5. Reflective sheeting for both prefixes, "S" and "I", shall be Non-Exposed Lens Type.

DEPARTMENT OF HIGHWAYS
STATE OF COLORADO
DIVISION OF HIGHWAYS

AUXILIARY MARKERS

Designed By: J.J.S. Made By: B.H.B. Checked By: J.J.B.	Approved By: [signature] Traffic Engineer Date March 22, 1971

STANDARD S-614-35A

JULY 1, 1968

FEDERAL ROAD REGION NO.	DIVISION	PROJ. NO.	SHEET NO.	TOTAL SHEETS
9	COLORADO			

REVISIONS			
(R-1)	11-14-68	Reverse Side Paint	J. L. S.
(R-2)	12-10-69	Revise Dimensions and Guide Sign Details.	J. J. B.
(R-3)	11-17-71	Illustrations	J. D. S.

(R-3) OFF RAMP TERMINAL INSTALLATION

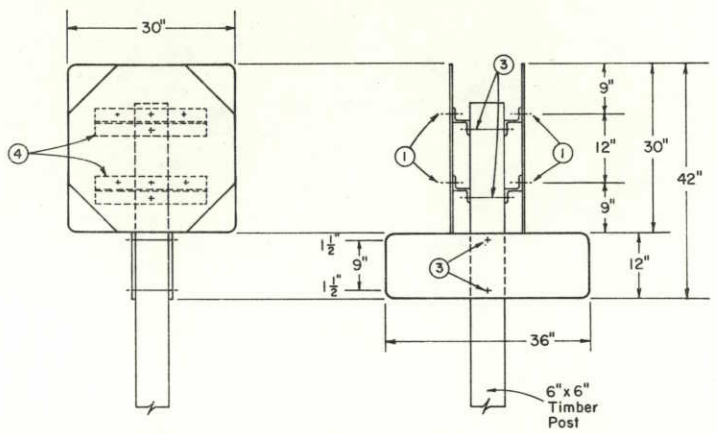

30" DIAMOND and 36"x24" WRONG / WAY

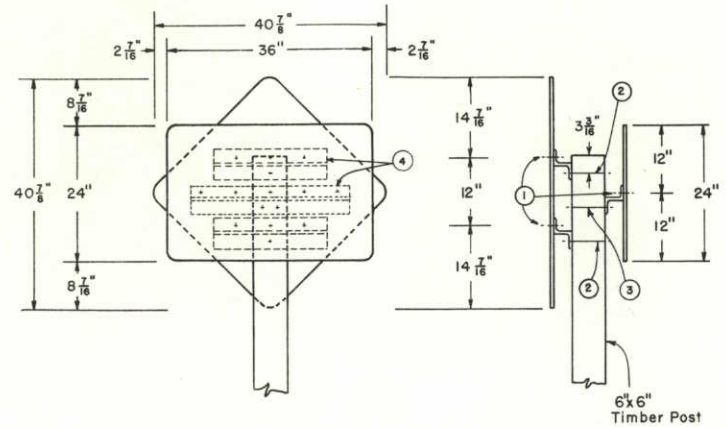

36" DIAMOND and 36"x24" WRONG / WAY

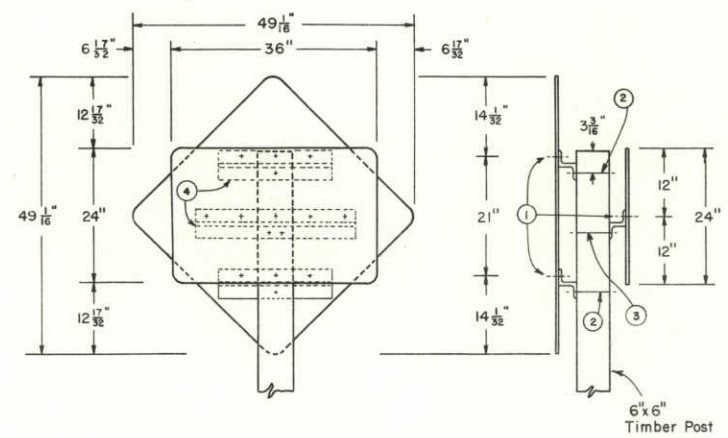

FABRICATION NOTES

1. 3/8" ø 90° countersunk aluminum lockbolt fastener.
2. 5/8" ø galvanized or cadmium plated machine bolt, nut and washers.
3. 3/8" ø galvanized or cadmium plated machine bolt, nut and washers.
4. 3" x 2¾" x ¼" backing zee.

(R-2) ALUMINUM GUIDE SIGN and 48"x30" WRONG/WAY

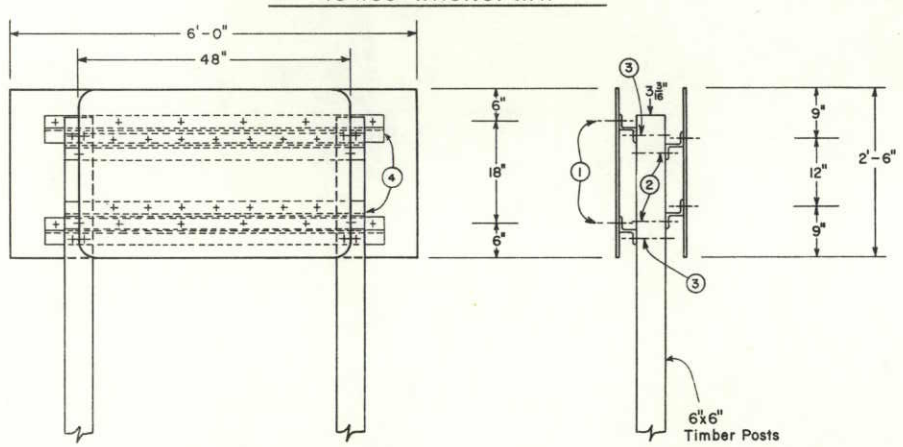

(R-3) (R-2) ALUMINUM GUIDE SIGN and 30"x30" REGULATORY SIGN

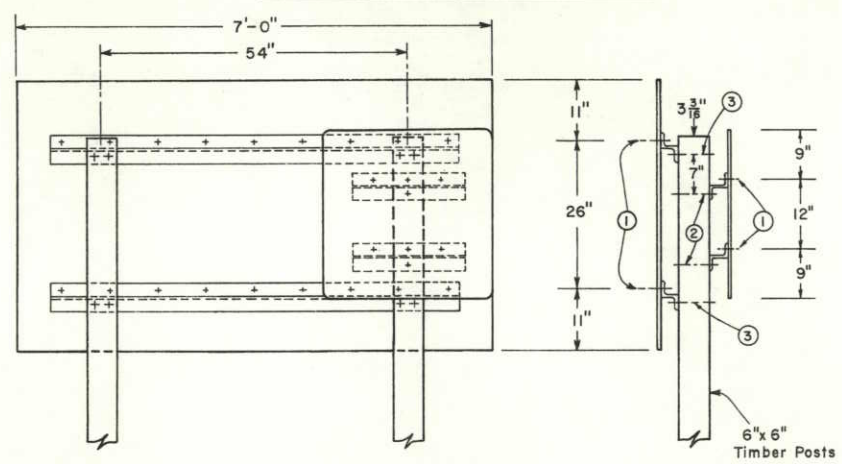

(R-3) 48"x48" REGULATORY SIGN and 48" DIAMOND WITH EDUCATIONAL PLAQUE

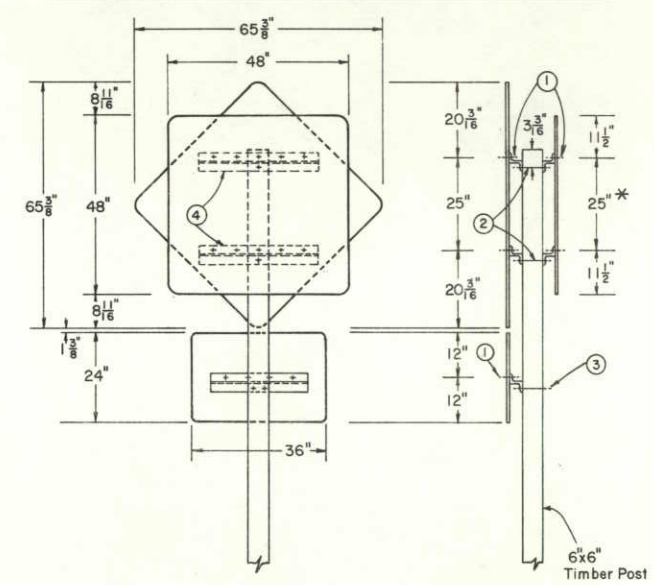

* FOR THIS INSTALLATION, USE THIS DIMENSION FOR ZEE SPACING OF 48" x 48" RECTANGLE.

GENERAL NOTES

1. All work shall be done in accordance with the Standard Specifications applicable to the Project.
2. For sign placement see applicable Standard.
3. For Typical Class I, II and III Ground Sign Installation details see Applicable Standards.
4. (R-1) The "DO NOT / ENTER" and "WRONG / WAY" plaques used in the multi-sign installations indicated shall have a flat black enameled reverse (back) side.

DEPARTMENT OF HIGHWAYS
STATE OF COLORADO
DIVISION OF HIGHWAYS

TYPICAL MULTI — SIGN INSTALLATIONS

Designed By: J.L.S.
Made By: F.J.B. & J.J.B.
Checked By: G.W.F.

Approved By: [signature]
Traffic Engineer
Date July 1, 1968

STANDARD S-614-49A

JUNE 23, 1972

FEDERAL ROAD REGION NO.	DIVISION	PROJ. NO.	SHEET NO.	TOTAL SHEETS
VIII	COLORADO			

REVISIONS		
(R-1) 4-12-73	Post Notes	J.D.S.

TYPICAL SIGN INSTALLATIONS

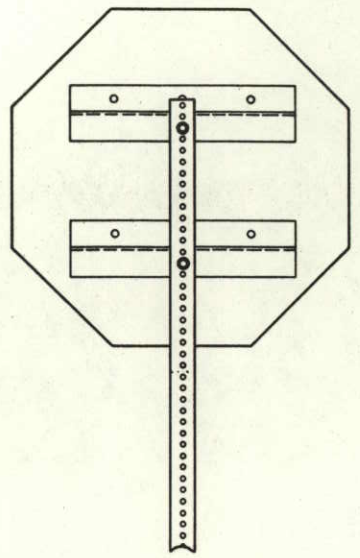

CLASS II
ONE POST

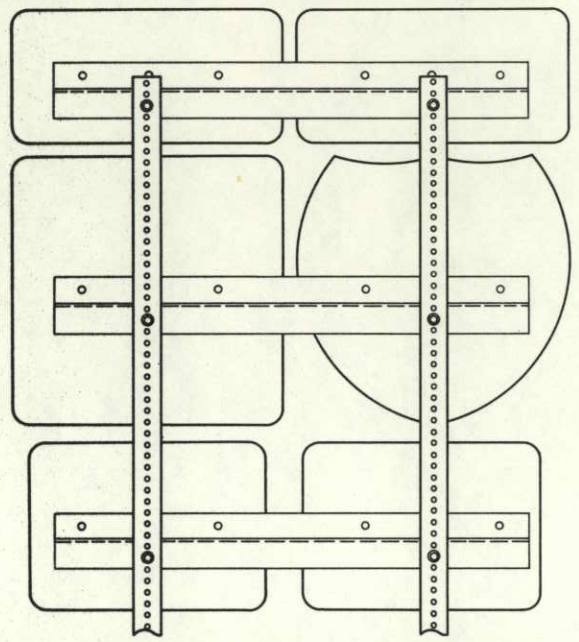

CLASS II TWO POST MULTI-SIGN

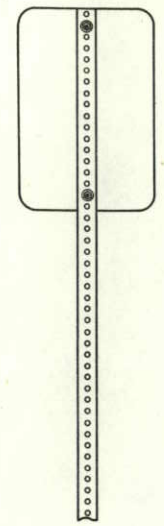

CLASS I

GENERAL NOTES

1. All work shall be done in accordance with the Standard Specifications applicable to the Project.
2. For sign panel fabrication details, mounting height and hole spacing for backing zees, see applicable STANDARDS included in the Plans.
3. (R-1) Steel tubing shall conform to ASTM A446, Grade A, with G 90 galvanizing.
4. Consecutive size tubes shall telescope freely.

TUBE SIZE SELECTION TABLE (ONE POST)

MOMENT ARM (FEET)	SIGN PANEL AREA (SQ. FT.) 1	2	3	4	5	6	7	8	9	10	11	12	13
6½	1 3/8	1 3/8	1 3/8	1 3/8	2	2	2¼	2¼	2 3/16	2½	2½	2½	2½
7	1 3/8	1 3/8	1 3/8	1 3/8	2	2	2¼	2¼	2 3/16	2½	2½	2½	
7½	1 3/8	1 3/8	1 3/8	2	2	2¼	2¼	2 3/16	2½	2½	2½		
8	1 3/8	1 3/8	1 3/8	2	2	2¼	2¼	2½	2½	2½	2½		
8½	1 3/8	1 3/8	1 3/8	2	2¼	2¼	2 3/16	2½	2½	2½			
9	1 3/8	1 3/8	1 3/8	2	2¼	2¼	2 3/16	2½	2½				
9½	1 3/8	1 3/8	1 3/8	2	2¼	2 3/16	2½	2½	2½				
10	1 3/8	1 3/8	2	2	2¼	2 3/16	2½	2½					
10½	1 3/8	1 3/8	2	2¼	2¼	2½	2½	2½					
11	1 3/8	1 3/8	2	2¼	2¼	2½	2½						
11½	1 3/8	1 3/8	2	2¼	2 3/16	2½	2½						
12	1 3/8	1 3/8	2	2¼	2 3/16	2½	2½						
12½	1 3/8	1 3/8	2	2¼	2½	2½							
13	1 3/8	1 3/8	2	2¼	2½	2½							
13½	1 3/8	1 3/8	2	2¼	2½	2½							
14	1 3/8	1 3/8	2¼	2 3/16	2½	2½							

BREAK-AWAY DETAILS

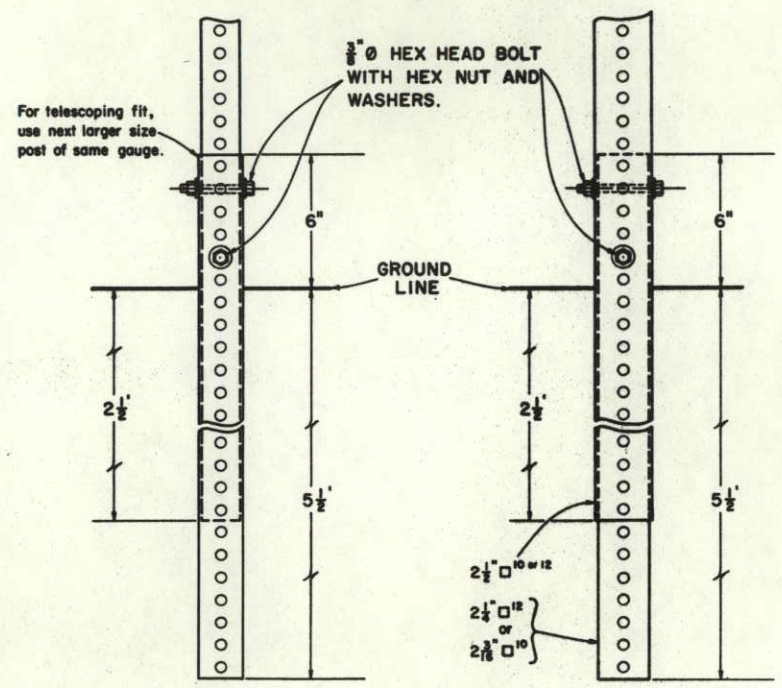

TYPE I TYPE II

SIGN PANEL ATTACHMENT DETAILS

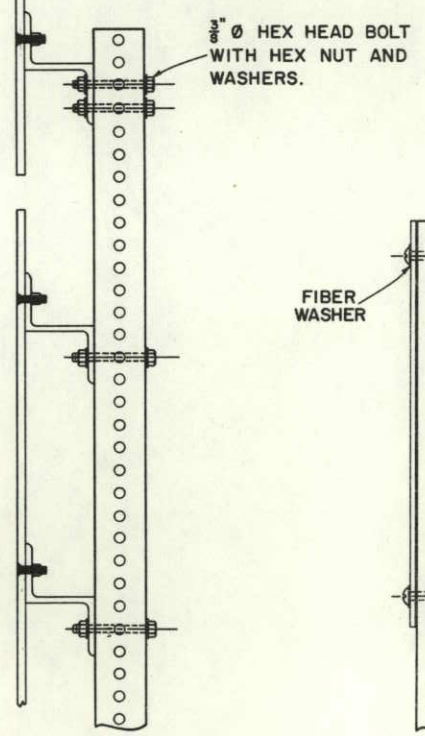

CLASS II

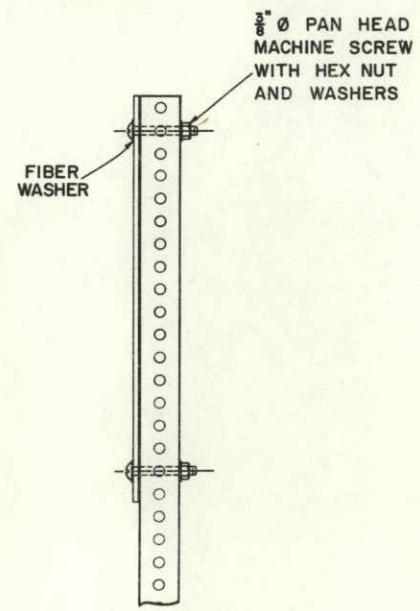

CLASS I

TUBE SIZE SELECTION TABLE (TWO POSTS)

MOMENT ARM (FEET)	SIGN PANEL AREA (SQ. FT.) 7	8	9	10	11	12	13	14	15	16	17	18	19	20
6½	1 3/8	1 3/8	1 3/8	2	2	2	2	2¼	2¼	2¼	2 3/16	2 3/16	2½	2½
7	1 3/8	1 3/8	2	2	2	2	2¼	2¼	2¼	2¼	2 3/16	2 3/16	2½	2½
7½	2	2	2	2	2	2¼	2¼	2¼	2¼	2 3/16	2½	2½	2½	2½
8	2	2	2	2	2¼	2¼	2¼	2¼	2 3/16	2½	2½	2½	2½	2½
8½	2	2	2	2¼	2¼	2¼	2¼	2 3/16	2½	2½	2½	2½	2½	2½
9	2	2	2	2¼	2¼	2¼	2 3/16	2 3/16	2½	2½	2½	2½	2½	
9½	2	2	2¼	2¼	2¼	2 3/16	2 3/16	2½	2½	2½	2½	2½		
10	2	2	2¼	2¼	2¼	2 3/16	2½	2½	2½	2½	2½			
10½	2¼	2¼	2¼	2¼	2 3/16	2½	2½	2½	2½	2½				
11	2¼	2¼	2¼	2¼	2 3/16	2½	2½	2½	2½					
11½	2¼	2¼	2¼	2 3/16	2½	2½	2½	2½						
12	2¼	2¼	2¼	2 3/16	2½	2½	2½	2½						
12½	2¼	2¼	2 3/16	2½	2½	2½	2½							
13	2¼	2¼	2 3/16	2½	2½	2½	2½							
13½	2¼	2¼	2 3/16	2½	2½	2½								
14	2 3/16	2 3/16	2½	2½	2½	2½								

POST SELECTION NOTES

(R-1) 1. 2¼ Type I break-away
2. 2½ Type II break-away
3. 2½ 10-gauge perforated square steel tubing.
4. Unless otherwise indicated, use 12-gauge perforated square steel tubing.
5. For post lengths and sign panel area values that fall between listed values, use the next higher value.
6. Table values indicate square tube size in inches.
7. Sign panel width shall determine the number of posts to be used. Signs wider than 2'-6" will require two posts.
8. Moment Arm is the vertical distance from a point 6 inches above the ground to the approx. center of the sign or multi sign panel (centroid).

DEPARTMENT OF HIGHWAYS
STATE OF COLORADO
DIVISION OF HIGHWAYS

ALTERNATE SIGN POST MATERIALS

Designed By: J. D. S.
Made By: J. E. M.
Checked By: J. D. S.

Approved By: [signature]
Traffic Engineer
Date June 22, 1972

STANDARD S-614-52A

(MARCH 1, 1972)

(R-3)

FEDERAL ROAD REGION NO.	DIVISION	PROJ. NO.	SHEET NO.	TOTAL SHEETS
VIII	COLORADO			

REVISIONS			
(R-1)	6-26-73	Notes	J.D.S.
(R-2)	11-1-73	Notes, Illustrations, & Title	J.D.S.
(R-3)	12-4-74	Notes, Illustrations, & Table	J.D.S.

TYPE 1 BARRICADE ▲ (R-3)

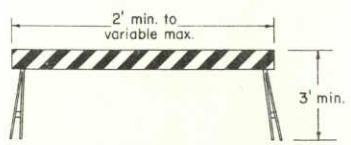

May be fabricated of lumber, aluminum or other suitable light weight materials of structural soundness.

Stands may be detachable for mobility.

Type 1 Barricade has 2 reflectorized rail faces (one each direction).

TYPE 2 BARRICADE ▲ (R-3)

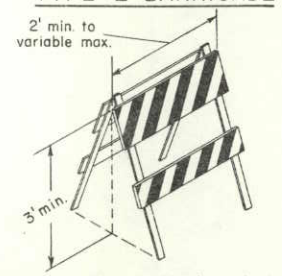

May be fabricated of lumber, aluminum or other suitable light weight materials of structural soundness.

Type 2 Barricade has 4 reflectorized rail faces (two each direction).

TYPICAL TYPE 3 BARRICADES ▲ (R-3)

(Timber)

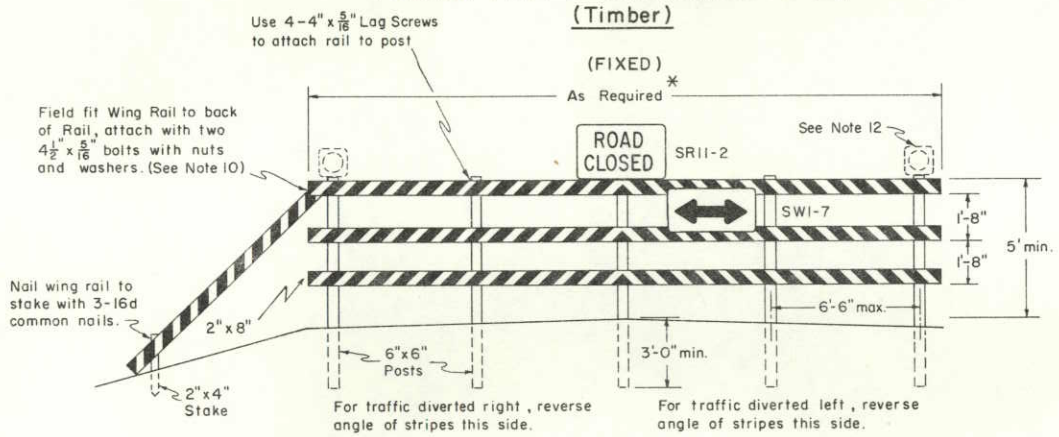

Type 3 Barricades have 3 reflectorized rail faces if facing traffic in one direction; 6 if facing traffic in two directions.

(MOVABLE)

RIGID

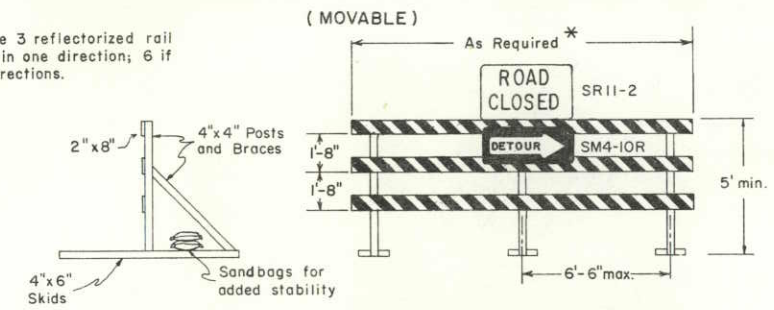

DEMOUNTABLE

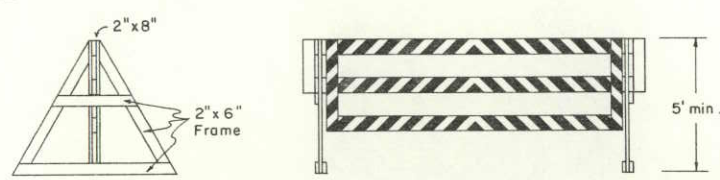

HINGED

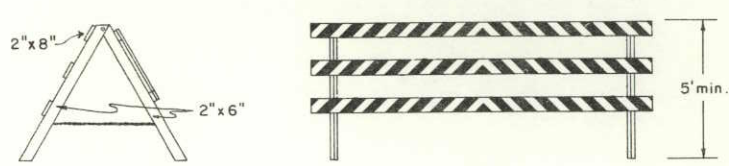

(R-3)

	BARRICADE DESIGNATIONS		
	TYPE 1	TYPE 2	TYPE 3
Rail Width	8" min. – 12" max.	Top – 8" min. – 12" max. Mid – 4" min. – 8" max.	8" min. – 12" max.
Rail Length	2' min. to variable max.	2' min. to variable max.	As required, see Table *
Height	3' min.	3' min.	5' min.
Stripes	See Detail of Barricade Striping		See Notes 4 & 7
Frame	Demountable or Heavy Duty "A" Frame	Light "A" Frame	Posts, Skids or "A" Frame
Flexibility	Movable	Portable	Fixed or movable
Use	Temporary	Temporary	Temporary or Permanent

(R-2)

RAIL LENGTH TABLE *		
TYPE 3 BARRICADE		LENGTH
FIXED	MOVABLE	
F – A	M – A	8' – 14'
F – B	M – B	15' 24'
F – C	M – C	25' – 35'
F – D	M – D	> 35'

(R-3) (R-2) TYPICAL DRUM CHANNELIZING DEVICE

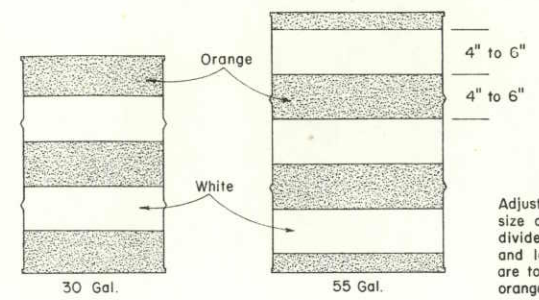

Adjustments due to odd size drums should be divided between the upper and lower stripes. Drums are to be predominantly orange, but a minimum of two white stripes per drum is required.

(R-3) DETAIL OF BARRICADE RAIL STRIPING ■

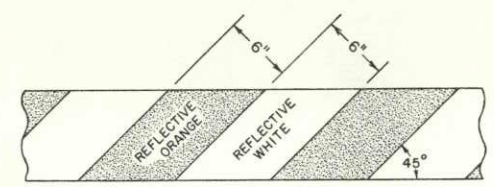

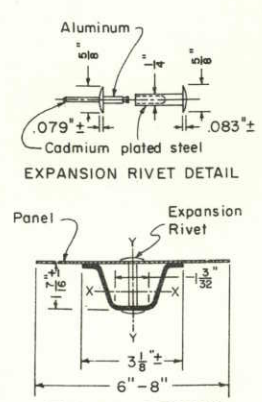

(R-3) TYPICAL VERTICAL PANEL CHANNELIZING DEVICE

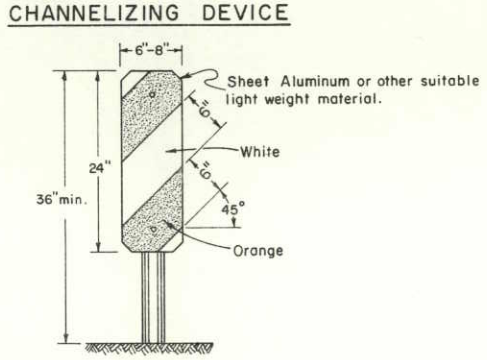

GENERAL NOTES

1. All work shall be done in accordance with the Standard Specifications applicable to the project.
2. All signs, sign materials, beacons, and barricade warning lights shall conform to the standards set forth in the "Manual on Uniform Traffic Control Devices for Streets and Highways" published by the Federal Highway Administration, of current issue, and the Colorado Supplement thereto, and this standard.
3. The various types and combinations of approved signs and beacons for barricades required for each project shall be governed by field conditions and subject to approval by the Engineer. Typical barricade applications are shown in Part 6 of the Manual on Uniform Traffic Control Devices for Streets and Highways.

(R-3) 4. Painting shall conform with Subsections 508.08 and 614.07 of the Standard Specifications. All skids, braces and posts shall be painted with 2 coats of "Exterior White Paint". Horizontal and wing rails on all barricades shall have orange and white stripes. The entire area of orange and white stripes shall be reflectorized.

(R-2) 5. Each barricade rail and vertical panel channelizing device shall be striped on the face side only with stripes slanting downward at a 45° angle toward the side to which traffic is to turn or pass. The backsides of rails and vertical panel channelizing devices shall be painted with "Exterior White Paint".

6. When fixed barricades are designated on plans, the portion of the posts below ground line shall be dipped in hot creosote oil. The portion of the post above ground line shall be painted with 2 coats of "Exterior White Paint".

(R-3) 7. Black and white barricade may be used to mark the end of a road, street or highway where there is no crossroad or outlet.

8. All skids, braces, rails and posts shall be nailed together with No. 20d nails. All screws, bolts, nuts and washers shall be galvanized or cadmium plated. Skids (bases) of movable barricades shall be weighted where necessary to provide stability.

(R-1) 9. All timber shall be Grade No. 2 or better, S 4 S, Douglas fir or Larch, as described in the current Standard Grading Rules published by the Western Wood Products Association, and shall conform to applicable paragraphs for the rails and posts.

10. Detachable extension wing rails for bypassing of construction equipment are permitted when necessary. The length is variable and shall be adequate to provide closing of borrow pit and/or shoulder as required. May be used on Fixed or Movable Type 3 Barricades.

11. Alternate materials or other reflective elements on traffic signs or barricades will be permitted only after approval of such material by the Division in writing.

(R-1) 12. Flashing Beacons or Barricade Warning Lights shall be used in connection with barricades when called for by the Engineer. When used, they shall be positioned above the top rail of the barricades to produce the most effective results. When used, Barricade Warning Lights shall be of the type specified by the Engineer.

(R-1) 13. All reflective surfaces shall be reflective sheeting of the smooth surface type.

14. Barricades used as "Traffic Controls for Highway Construction" are not to be paid for separately.

15. Barricades will be paid for separately when designated on plans as bid items.

(R-2) 16. Drums shall be reflectorized for use at night and should never be placed in the roadway without advance warning signs.

(R-3) ▲ 17. For wooden barricades, nominal lumber dimensions are satisfactory.

(R-3) ■ 18. For rails less than 3' long, 4" wide stripes are to be used.

(R-2)

DEPARTMENT OF HIGHWAYS
STATE OF COLORADO
DIVISION OF HIGHWAYS

BARRICADES, DRUMS, & VERTICAL PANEL CHANNELIZING DEVICES

Designed By: GWF Made By: JVN Checked By: GWF	Approved By: [signature] Traffic Engineer Date March 1, 1972