DEPARTMENT OF TRANSPORTATION
STATE OF COLORADO

FED. ROAD REGION	DIVISION	PROJECT NUMBER	SHEET NUMBER
VIII	COLORADO	NH 0853-017	1

REVISIONS

10/06/94	Add sheets 3b, 3c	JTO

RIGHT OF WAY
AT "O" ST. (GREELEY) PH. 1

RIGHT OF WAY PLAN OF PROPOSED

FEDERAL AID PROJECT NO. NH 0853-017
STATE HIGHWAY NO. 85
WELD COUNTY

RIGHT OF WAY

SCALES OF ORIGINAL DRAWINGS

PLAN SHEETS 1:600
OWNERSHIP MAP 1:2400
R.O.W. LENGTH OF PROJECT = 0.08 MILES

INDEX OF SHEETS

1	TITLE SHEET
2	TABULATION OF PROPERTIES SHEET
3–3C	CONTROL AND MONUMENTATION SHEET
4–9	PLAN SHEETS (SHEETS 4–8 NOT PRINTED)
10	OWNERSHIP MAP

CONVENTIONAL SIGNS

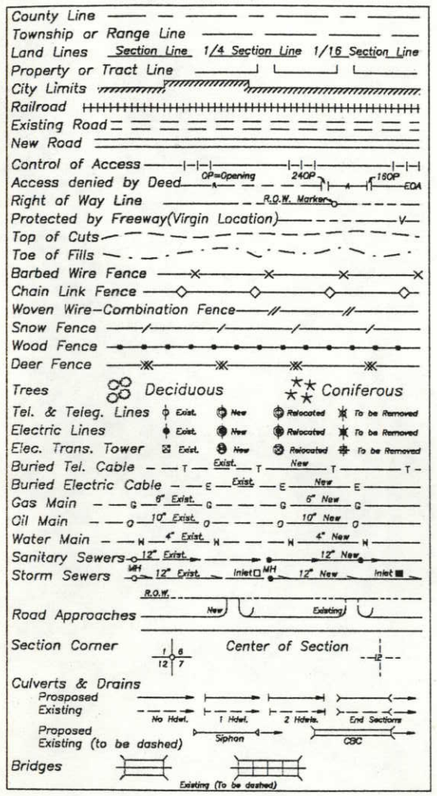

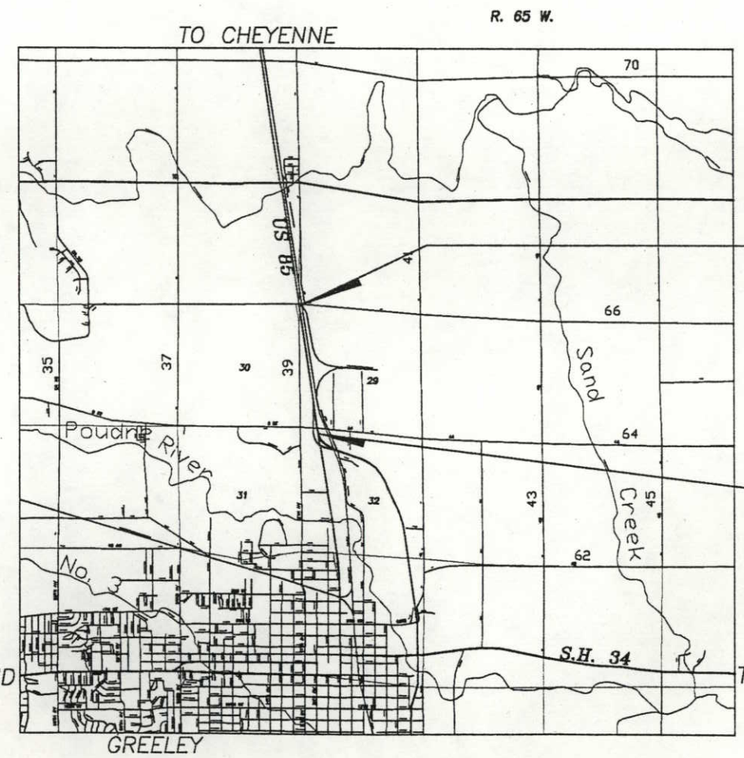

END R.O.W. PROJ. NH 0853-017
STA. 331+25.95(US 85) M.P. 270.90
END CONST. PROJ. NH 0853-017
STA. 359+00(US 85) M.P. 271.42

BEG. R.O.W. PROJ. NH 0853-017
STA. 327+22.83(US 85) M.P. 270.82
BEG. CONST. PROJ. NH 0853-017
STA. 303+00(US 85) M.P. 270.36

N

BASIS OF BEARINGS

All bearings are based on a line connecting the SW 1/4 corner of Section 29, T. 6 N., R. 65 W., of the 6th P.M. (alum. tubing w/alum. cap) and the W 1/4 corner of Section 29 (PK nail) as bearing N. 0° 44' 55" W.

SW corner Sec. 29 (alum. tubing w/alum. cap) — W 1/4 corner Sec. 29 (PK nail)

N. 0° 44' 55" W.

SCALE IN MILES: 0 0.5 1 2 3 4
SCALE IN KILOMETERS: 0 1 2 3 4 5 6

DEPARTMENT OF TRANSPORTATION
FEDERAL HIGHWAY ADMINISTRATION

AUTHORIZED _____ DATE

DIVISION ADMINISTRATOR

DATE: AUG. 3, 1994
PROJ. CODE 92935
REGION: IV

CDOT	FED. ROAD REGION	DIVISION	PROJ. NO.	SHEET NO.
	VIII	COLO.	NH 0853-017	2

R.O.W. TABULATION OF PROPERTIES IN WELD COUNTY

S.H. NO. SH85

RIGHT OF WAY AT "O" ST.

PARCEL NO.	OWNER	ADDRESS	LOCATION	AREA IN HECTARES: AREA OF PARCEL	EXISTING ROW	NET AREA	REMAINDER: LEFT	REMAINDER: RIGHT	PARCEL NO.	REMARKS
			T. 6 N., R. 65 W., 6TH P.M.							
			WELD COUNTY							
1	L & L PARTNERSHIP	1091 "O" STREET	W 1/2 SW 1/4 SEC. 29	0.306		0.306		7+/-	1	
		GREELEY, CO 80631		(0.757 AC)		(0.757 AC)		(19.768 AC)		
		303-352-4024								
1A	L & L PARTNERSHIP	SAME AS ABOVE	W 1/2 SW 1/4 SEC. 29	0.038		0.038		SEE PAR. 1	1A	
	TO			(0.093 AC)		(0.093 AC)				
	MONFORT OF COLORADO, INC.									
1R	L & L PARTNERSHIP	SAME AS ABOVE	W 1/2 SW 1/4 SEC. 29	0.169		0.169		SEE PAR. 1	1R	
				(0.417 AC)		(0.417 AC)				
1RA	L & L PARTNERSHIP	SAME AS ABOVE	W 1/2 SW 1/4 SEC. 29	0.018		0.018		SEE PAR. 1	1RA	QUIT CLAIM BY ADJACENT PROPERTY OWNERS TO
	MONFORT OF COLORADO, INC.	1930 "AA" STREET		(0.045 AC)		(0.045 AC)				CLEAR CONFUSION OF OWNERSHIP
		GREELEY, CO 80631								
		303-353-2311								

CONTROL AND MONUMENTATION SHEET

FED. ROAD REGION	DIVISION	PROJECT NUMBER	SHEET NUMBER
VIII	COLORADO	NH 0853-017	3

REVISIONS

10/06/94	Add points, 6972, 6984, 6994, 7009,	
	7021, 7025, 7035, 7039, 7045, 7059,	
	7063, 7073, 7080, 7089, 7100, 7126,	
	7146	JTO

RIGHT OF WAY
AT "0" ST. (GREELEY) PH. 1

TABULATION OF R.O.W. MARKERS TO BE SET

151	30042.7322	82794.5350	RT OF STA 152+730.176 (11R)
152	30042.8071	82800.2711	RT OF STA 152+730.175 (11R)
153	30115.3063	82861.9523	RT OF STA 152+855.617 (11R)
154	30106.8700	82873.3745	RT OF STA 152+865.735 (11R)
155	30156.2853	82865.7393	LT OF STA 152+865.328 (11R)
156	30144.9548	82857.3714	LT OF STA 152+855.470 (11R)
157	30124.4906	82809.7039	RT OF STA 30+495.679 (APPR)
158	30165.4506	82793.8618	RT OF STA 30+545.968 (APPR)
159	30165.5239	82792.9308	RT OF STA 30+546.134 (APPR)

SURVEY CONTROL POINT TABULATION

1	31035.5596	82769.1403	NW COR SEC 29	TO BE SET
3	30974.5621	83579.3303	N 1/4 COR SEC 29	#6 REBAR W/ALUM CAP
4	30102.1867	84374.4796	E 1/4 COR SEC 29	#6 REBAR W/ALUM CAP
5	29362.2560	83600.6567	S 1/4 COR SEC 29	#4 REBAR
6	29392.4397	83195.3467	W 1/16 COR SEC 29/32	CDOT 2" X 30" ALUM PIPE
7	29422.3786	82793.4948	SW COR SEC 29	ALUM. TUBING W/ALUM CAP
8	30227.4559	82782.9769	W 1/4 COR SEC 29	PK NAIL
9	30196.8131	83185.6832	PROPERTY PIN	
6972	28236.9410	83193.5540	GPS CONTROL POINT	TYPE 2 MONUMENT
6984	28437.0800	83140.5060	GPS CONTROL POINT	TYPE 2 MONUMENT
6994	28594.9690	83114.8620	GPS CONTROL POINT	TYPE 2 MONUMENT
6996	29010.3550	83609.1280	GPS CONTROL POINT	TYPE 2 MONUMENT
7009	28844.4130	83122.8680	GPS CONTROL POINT	TYPE 2 MONUMENT
7010	29079.4600	83400.2860	GPS CONTROL POINT	TYPE 2 MONUMENT
7021	29023.1470	83045.8740	GPS CONTROL POINT	TYPE 2 MONUMENT
7025	29142.6390	83165.5040	GPS CONTROL POINT	TYPE 2 MONUMENT
7035	29244.3390	83053.4840	GPS CONTROL POINT	TYPE 2 MONUMENT
7039	29280.1550	82805.2470	GPS CONTROL POINT	TYPE 2 MONUMENT
7040	29278.9930	83182.4140	GPS CONTROL POINT	TYPE 2 MONUMENT
7044	29395.1940	83061.1900	GPS CONTROL POINT	TYPE 2 MONUMENT
7045	29401.8720	82781.3880	GPS CONTROL POINT	TYPE 2 MONUMENT
7059	29601.3770	83014.7680	GPS CONTROL POINT	TYPE 2 MONUMENT
7063	29674.0910	82795.6370	GPS CONTROL POINT	TYPE 2 MONUMENT
7073	29849.8530	82965.4530	GPS CONTROL POINT	TYPE 2 MONUMENT
7080	29942.2580	82792.2460	GPS CONTROL POINT	TYPE 2 MONUMENT
7089	30107.1690	82927.3540	GPS CONTROL POINT	TYPE 2 MONUMENT
7100	30267.7450	82788.0510	GPS CONTROL POINT	TYPE 2 MONUMENT
7112	30468.7940	82870.3020	GPS CONTROL POINT	TYPE 2 MONUMENT
7126	30690.1030	82782.2930	GPS CONTROL POINT	TYPE 2 MONUMENT
7146	31007.2350	82763.3790	GPS CONTROL POINT	TYPE 2 MONUMENT
7157	31180.6540	82717.3780	GPS CONTROL POINT	TYPE 2 MONUMENT

GENERAL NOTES

1. This Right of Way plan is not a complete boundary survey of all adjoining owners and is prepared for Highway Department purposes Only.
2. Survey Control Points set with a higher degree of accuracy than ROW Markers.
3. NOTICE: According to Colorado law you must commence any legal action based upon any defect in this survey within three years after you first discover such defect. In no event, may any action based upon any defect in this survey be commenced more than ten years from the date of the certification shown hereon.
4. All R.O.W. Markers set from survey control points.
5. All centerline and offset stationing is theoretical only and may not represent the centerline as constructed in the field. All stationing is approximate.
6. All coordinates listed are project coordinates only and are based in metric units.
7. Field survey control precision computed to exceed 1/100,000.
8. Memorandum of Ownerships supplied by Stewart Title of Greeley, Inc.
9. W 1/4 corner of Section 6, T. 6 N., R. 65 W. (pnt. 8) to be reset with a CDOT type 3A monument.

QUANTITY OF MONUMENTS TO BE SET

CAP TYPE	MONUMENT TYPE							
	1	1A	2	2A	3	3A	4	5
REFERENCE								
RIGHT OF WAY	9							
CONTROL								
ALIQUOT CORNER						2		
WITNESS POST								

SURVEYOR CERTIFICATE (FIELD)

Control Survey and Monumentation was done under my supervision and checking.

NAME _____ P.L.S. NO. _____

DATE _____

SURVEYOR CERTIFICATE (OFFICE)

R.O.W. Plans and Legal Descriptions were prepared under my supervision and checking.

NAME _____ P.L.S. NO. _____

DATE _____

FED. ROAD REGION	DIVISION	PROJ. NO.	SHEET NO.	TOTAL SHEETS
VIII	COLORADO	NH 0853-017	3A	

RIGHT OF WAY AT "O" ST.

REVISIONS		

NOTE: Control points established by GPS. Aliquot corners established conventionally.

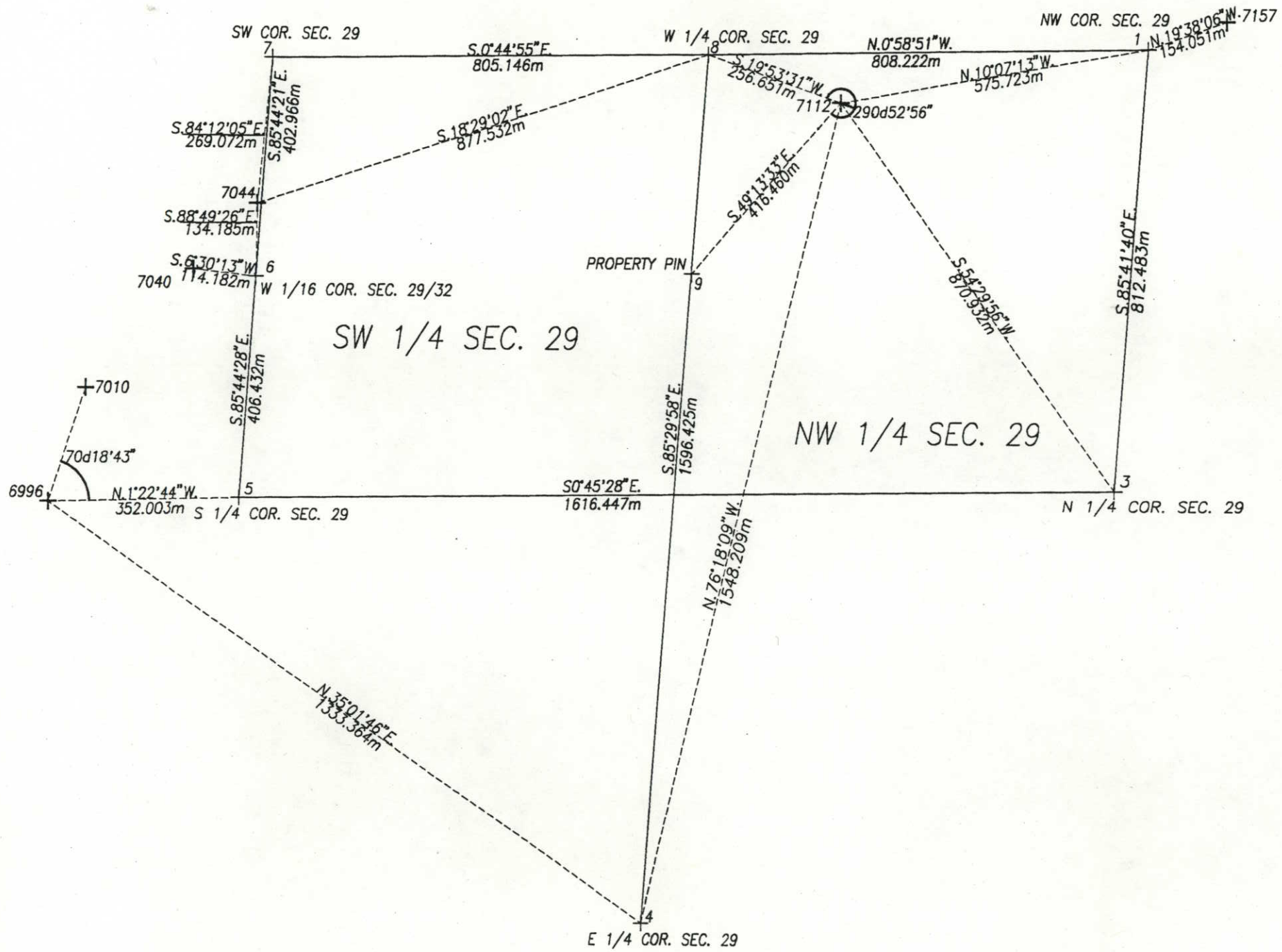

AS CONSTRUCTED		
NO REVISIONS	REVISED	VOID

FED. ROAD REGION	DIVISION	PROJ. NO.	SHEET NO.	TOTAL SHEETS
VIII	COLORADO	NH 0853-017	3B	

RIGHT OF WAY
AT "O" ST. (GREELEY) PH. 1

REVISIONS		

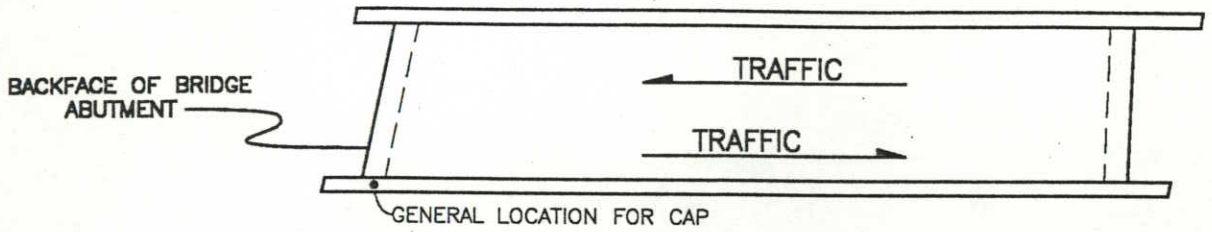

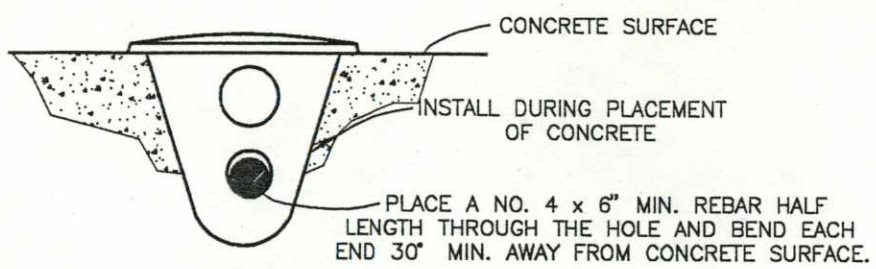

TYPE 4 MONUMENT

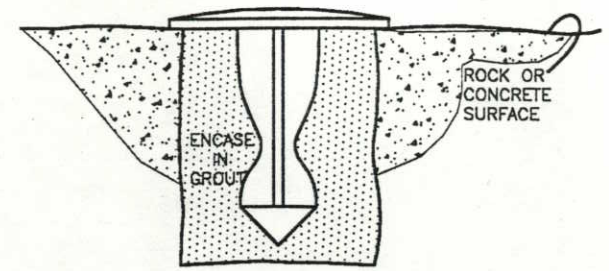

TYPE 5 MONUMENT

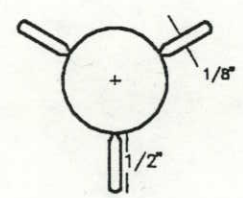

SECTION A–A

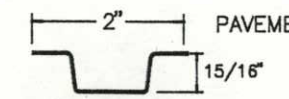

DELINEATOR POST

SECTION C–C

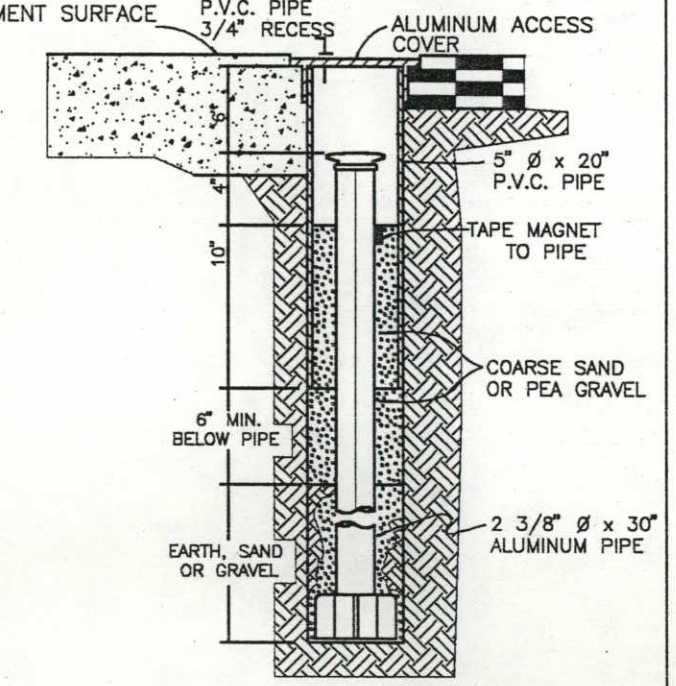

TYPE 3A MONUMENT,
ROADWAY INSTALLATION

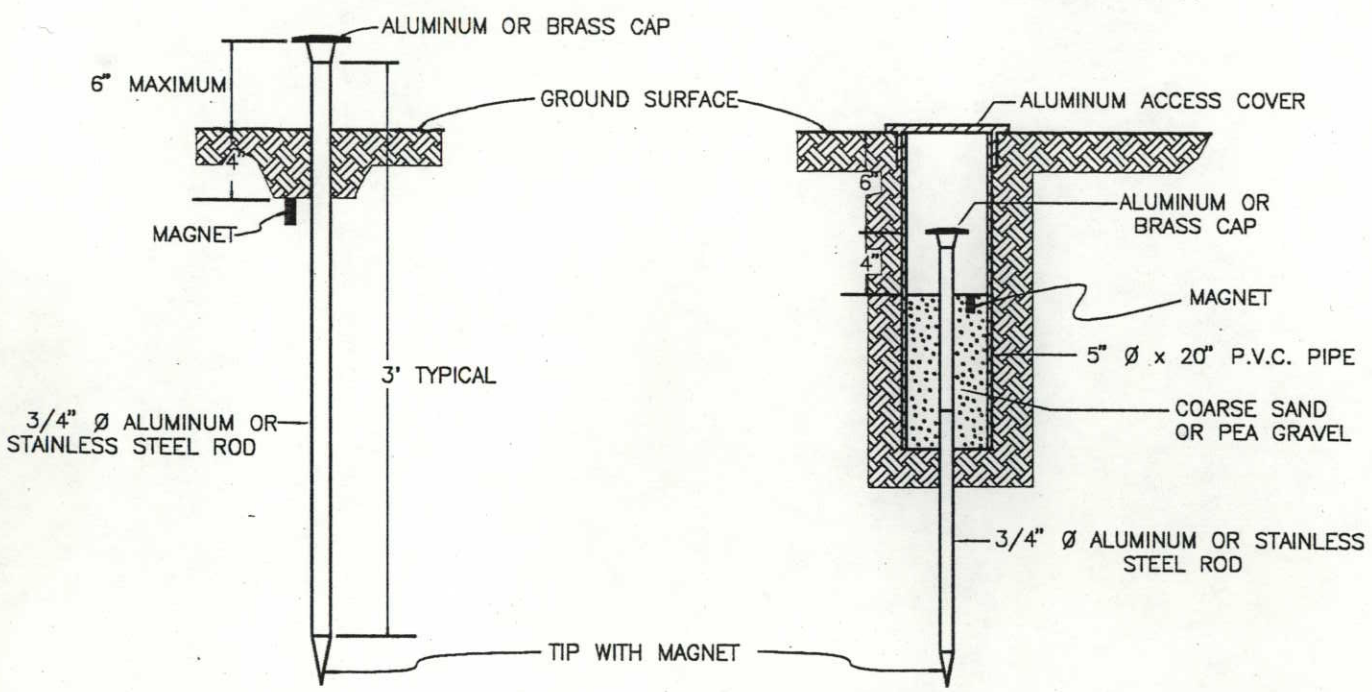

TYPE 1 MONUMENT

TYPE 1A MONUMENT & TYPE 2A MONUMENT
INCLUDES MONUMENT BOX

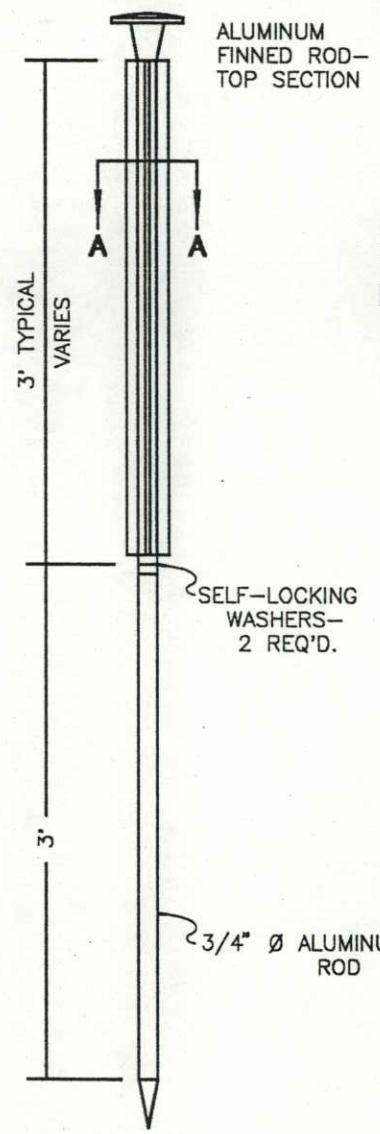

TYPE 2 MONUMENT

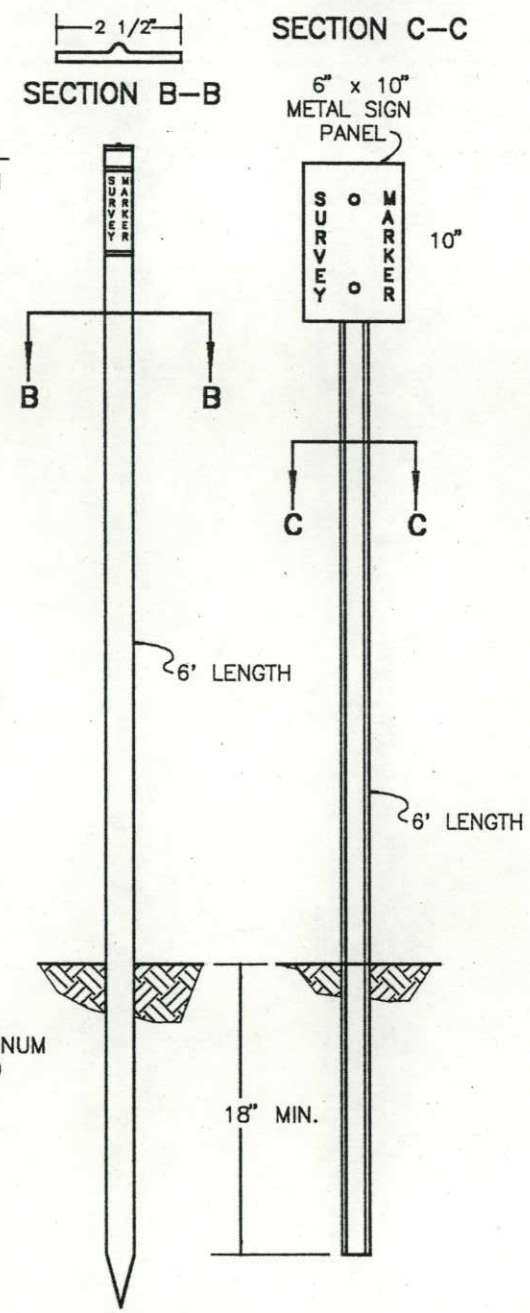

WITNESS POSTS

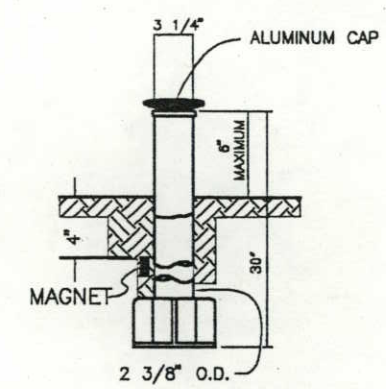

TYPE 3 MONUMENT

SURVEY MONUMENTS

AS CONSTRUCTED		
NO REVISIONS	REVISED	VOID

FED. ROAD REGION	DIVISION	PROJ. NO.	SHEET NO.	TOTAL SHEETS
VIII	COLORADO	NH 0853-017	3C	

RIGHT OF WAY
AT "O" ST. (GREELEY) PH. 1

REVISIONS		

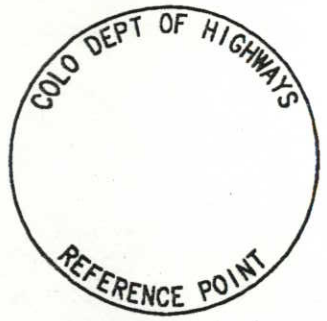

REFERENCE MONUMENT CAP

ROW MONUMENT CAP

CONTROL MONUMENT CAP

ALIQUOT CORNER CAP

NOTE: (A BLANK CAP MAY BE SUBSTITUTED IF THE APPROPRIATE ABOVE CAP IS NOT AVAILABLE. IF A BLANK CAP IS USED, ALL INFORMATION NORMALLY INCLUDED ON THE APPROPRIATE STANDARD CAP, SHALL BE STAMPED ON THE BLANK CAP ALONG WITH SPECIFIC PROJECT INFORMATION SUCH AS PROJECT NO., DATE, POINT NO., ETC..)

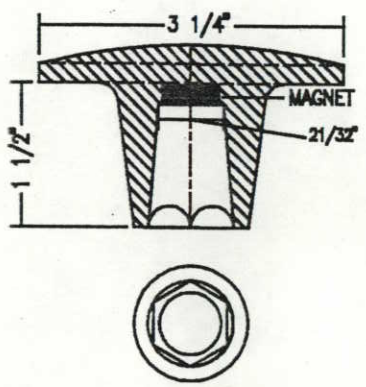

BRASS AND ALUMINUM CAPS

BRASS CAP USED WITH STAINLESS STEEL ROD. ALUMINUM CAP USED WITH ALUMINUM ROD. (THREADED CAP IS ALSO AVAILABLE)

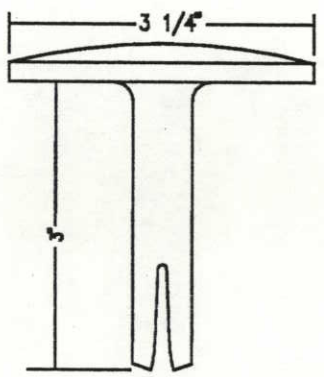

BRASS CAP

FOR PLACING IN EXISTING CONCRETE OR ROCK

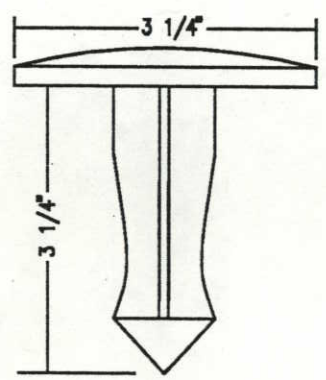

BRASS CAP

FOR PLACING IN EXISTING CONCRETE OR ROCK

MONUMENT APPLICATION

CAP TYPE	MONUMENT TYPE							
	1	1A	2	2A	3	3A	4	5
REFERENCE	X	X					X	
ROW	X	X						X
CONTROL		X	X	X			X	
ALIQUOT CORNER					X	X		
WITNESS POST (WHEN REQUIRED)	X	X	X	X	X			X

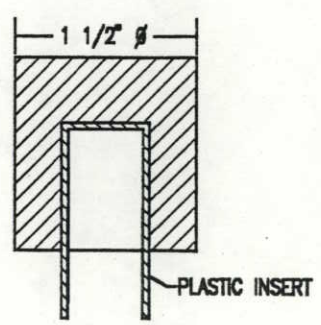

TEMPORARY ALUMINUM CAP

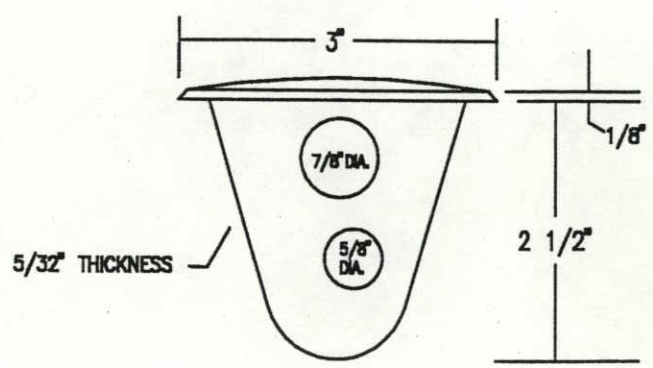

BRASS CAP

FOR PLACING IN NEW CONCRETE

TYPE 1 AND TYPE 1A ALUMINUM AND STAINLESS STEEL DRIVEN MONUMENTS

MONUMENTS ARE INSTALLED BY ATTACHING THE PROPER SIZE TIP TO ONE END OF A SECTION OF ROD AND A 3" LONG X 3/4" DIA. STAINLESS STEEL DRIVER TO THE OTHER END. A STEEL DRIVER IS THEN PLACED OVER THE STAINLESS STEEL DRIVER FOR THE HAMMER TO CONTACT. WHEN ADDITIONAL SECTIONS OF ROD ARE NEEDED, THEY ARE TO BE ATTACHED USING A SET OF SELF-LOCKING WASHERS. RODS ARE STOCKED IN TWO-FOOT AND THREE-FOOT SECTIONS. ONE-FOOT SECTIONS MAY BE OBTAINED BY CUTTING A TWO-FOOT SECTION IN HALF. THE ROD SECTION IS DRIVEN BY USING THE PROPER HAMMER WITH A SOFT FACE OR BY USING A POWER ADAPTER WITH A GASOLINE-POWERED DRIVER.

TYPE 1 MONUMENTS TYPICALLY USE A THREE-FOOT SECTION OF ROD. WHEN SUBSURFACE ROCK OR CONCRETE IS ENCOUNTERED LESS THAN 3 FEET BELOW THE GROUND SURFACE, THE ROD SHALL BE EMBEDDED IN THE ROCK OR CONCRETE AT LEAST 6" WITH A GROUT MATERIAL. THE ROD MAY BE SHORTENED TO ACCOMMODATE THE CONDITIONS.

TYPE 1A MONUMENTS SHALL BE DRIVEN TO REFUSAL BY THREADING ADDITIONAL SECTIONS ONTO THE FIRST SECTION. ADDED SECTIONS REQUIRE A SET OF LOCK WASHERS. REFUSAL IS DEFINED AS ONE INCH OF MOVEMENT WITH FOUR HEAVY BLOWS OF A 12 LB. HAMMER. A DRIVEN CAP IS NECESSARY (VS. A THREADED CAP) WHEN A CUT ROD IS USED. A SOFT FACED HAMMER IS REQUIRED TO SEAT THE DRIVEN CAP ONTO THE ROD.

TYPE 2 AND TYPE 2A ALUMINUM FINNED ROD MONUMENTS

A TYPE 2 MONUMENT IS USED FOR HORIZONTAL CONTROL MONUMENTS WHERE LOOSE MATERIAL IS ENCOUNTERED. THE LARGER SIZE TIP IS TO BE USED ON ONE END OF THE THREE-FOOT ROD AND THE FINS ON THE OPPOSITE END OF THE THREE-FOOT ROD ARE TO BE BENT OVER TO ACCOMMODATE THE CAP. IF MORE VERTICAL STABILITY IS REQUIRED FOR USE AS A VERTICAL CONTROL MONUMENT, THE ADDED SECTIONS WHICH ARE NOT FINNED, SHOULD BE DRIVEN FIRST. THE NUMBER OF SECTIONS TO BE ADDED WILL VARY WITH NEEDS AND TYPE OF SOIL.

THE TYPE 1A MONUMENT NOTE ABOVE ALSO APPLIES TO THE TYPE 2A MONUMENT.

TYPE 3 AND TYPE 3A ALUMINUM PIPE MONUMENTS

THIS MONUMENT IS USED TO MONUMENT AN ALIQUOT CORNER. THE INSTALLATION OF THIS MONUMENT AND RECORD FILING SHALL BE DONE IN ACCORDANCE WITH THE COLORADO REVISED STATUTES, TITLE 38, ARTICLES 50 AND 51. ALSO REFER TO THE CDOH SURVEY MANUAL. THE LAND SURVEYOR'S LICENSE NUMBER AND THE YEAR SHALL BE STAMPED ON THE CAP.

TYPE 4 BRASS CAP MONUMENT

THIS MONUMENT IS PLACED IN CONCRETE, SUCH AS BRIDGE SUPER STRUCTURE CONCRETE. IT IS PLACED ABOVE A FOOTING SUPPORT OVER THE ABUTMENT OR OVER A PIER. AN ALTERNATE PLACEMENT IS VERTICALLY IN THE ABUTMENT WALL OR PIER IF ONLY AN ELEVATION REFERENCE IS DESIRED AND IT IS POSSIBLE TO LEAVE ACCESS FOR AN ELEVATION ROD.

TYPE 5 BRASS CAP MONUMENT

THIS MONUMENT IS PLACED IN LOCATIONS WHERE A TYPE 1 OR TYPE 1A MONUMENT CANNOT BE PLACED. A COMMON APPLICATION IS IN A LARGE BOULDER WHERE A PROPERTY CORNER HAS BEEN PLACED. THIS MONUMENT COULD ALSO BE PLACED IN A SIDEWALK.

WITNESS POSTS

THE WITNESS POST, WHEN REQUIRED, WILL BE SUPPLIED BY THE DIVISION AND INSTALLATION SHALL BE INCLUDED IN THE WORK. IT SHALL BE DRIVEN WITHIN 10 FEET OF THE MONUMENT, WHEN POSSIBLE. A DELINEATOR POST WITH A 6" X 10" METAL SIGN PANEL MAY BE USED IN LIEU OF THE PLASTIC POST. THIS POST SHALL CONFORM TO STANDARD S-612-1.

SELF-LOCKING WASHERS

A SET OF TWO WASHERS SHALL BE USED AT ROD JOINTS AND THREADED CAP JOINTS, BUT NOT AT TIP JOINTS.

TEMPORARY MONUMENTS

A TEMPORARY ALUMINUM CAP IS USED ON A NO. 5 REBAR.

SURVEY MONUMENTS

FED. ROAD REGION	DIVISION	PROJ. NO.	SHEET NO.	TOTAL SHEETS
VIII	COLORADO	NH 0853-017	4	

RIGHT OF WAY AT "O" ST.

REVISIONS		

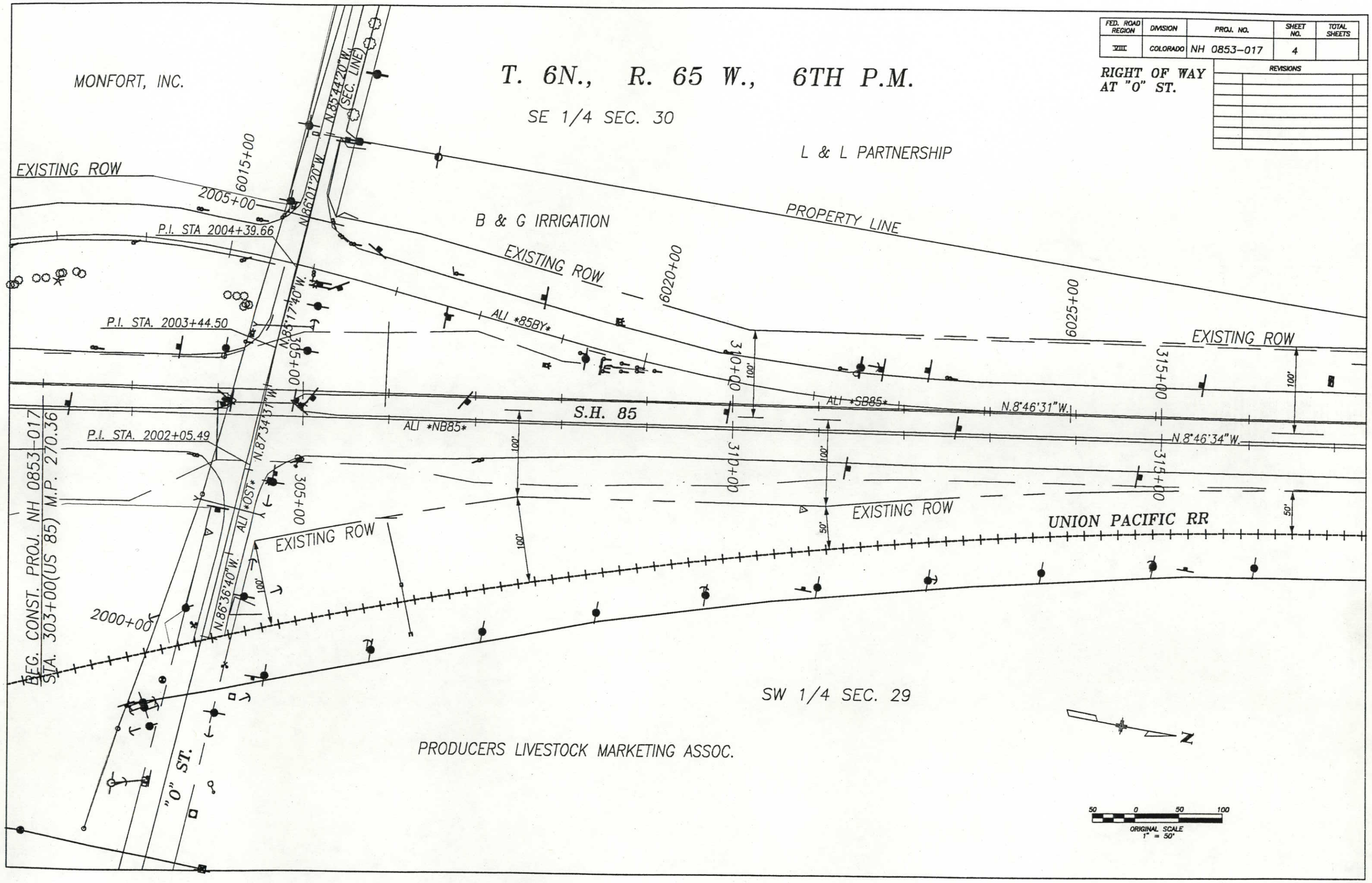

FED. ROAD REGION	DIVISION	PROJ. NO.	SHEET NO.	TOTAL SHEETS
VIII	COLORADO	NH 0853-017	5	

REVISIONS		

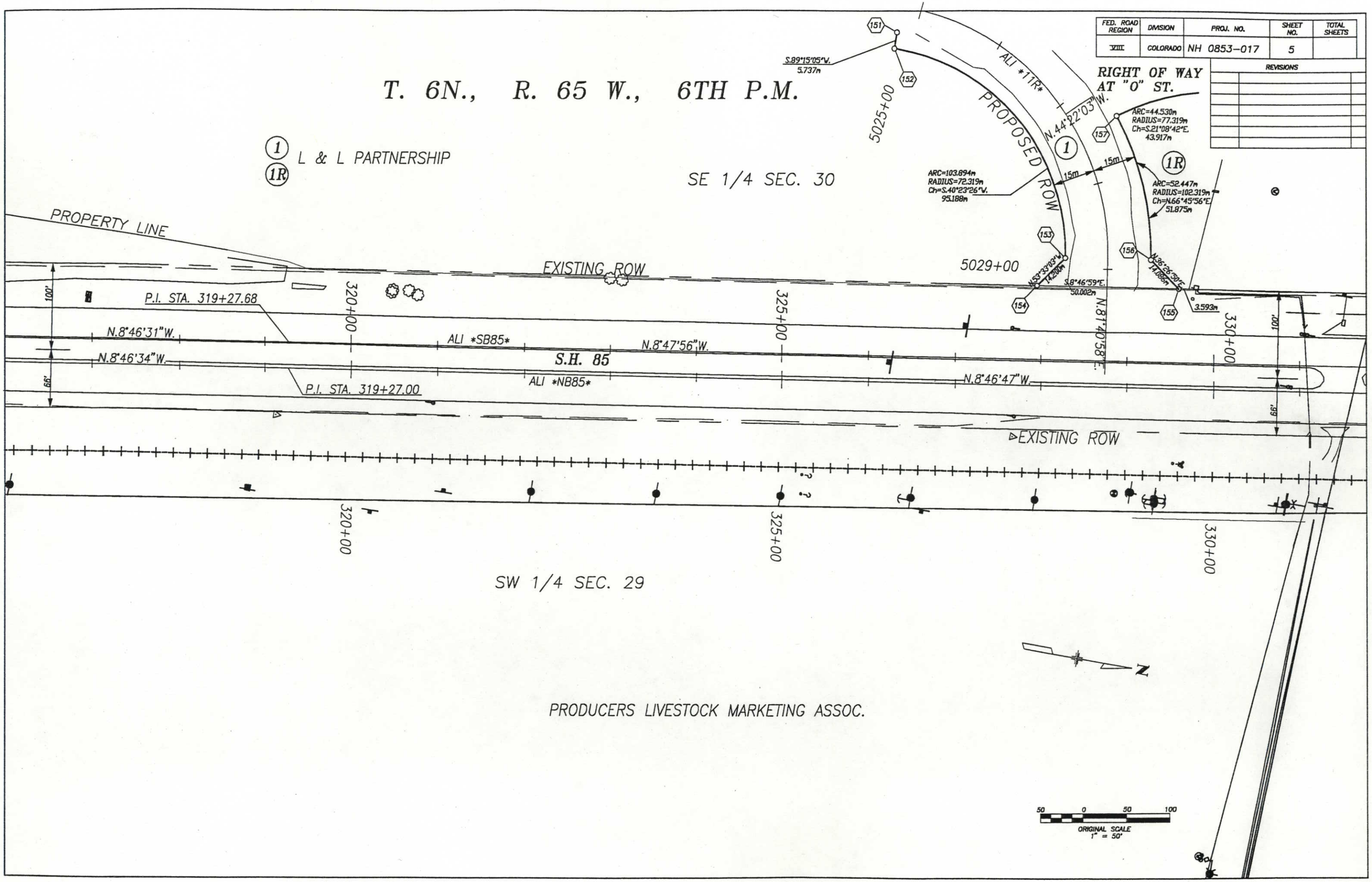

FED. ROAD REGION	DIVISION	PROJ. NO.	SHEET NO.	TOTAL SHEETS
VIII	COLORADO	NH 0853-017	6	

REVISIONS

RIGHT OF WAY AT "O" ST.

T. 6N., R. 65 W., 6TH P.M.

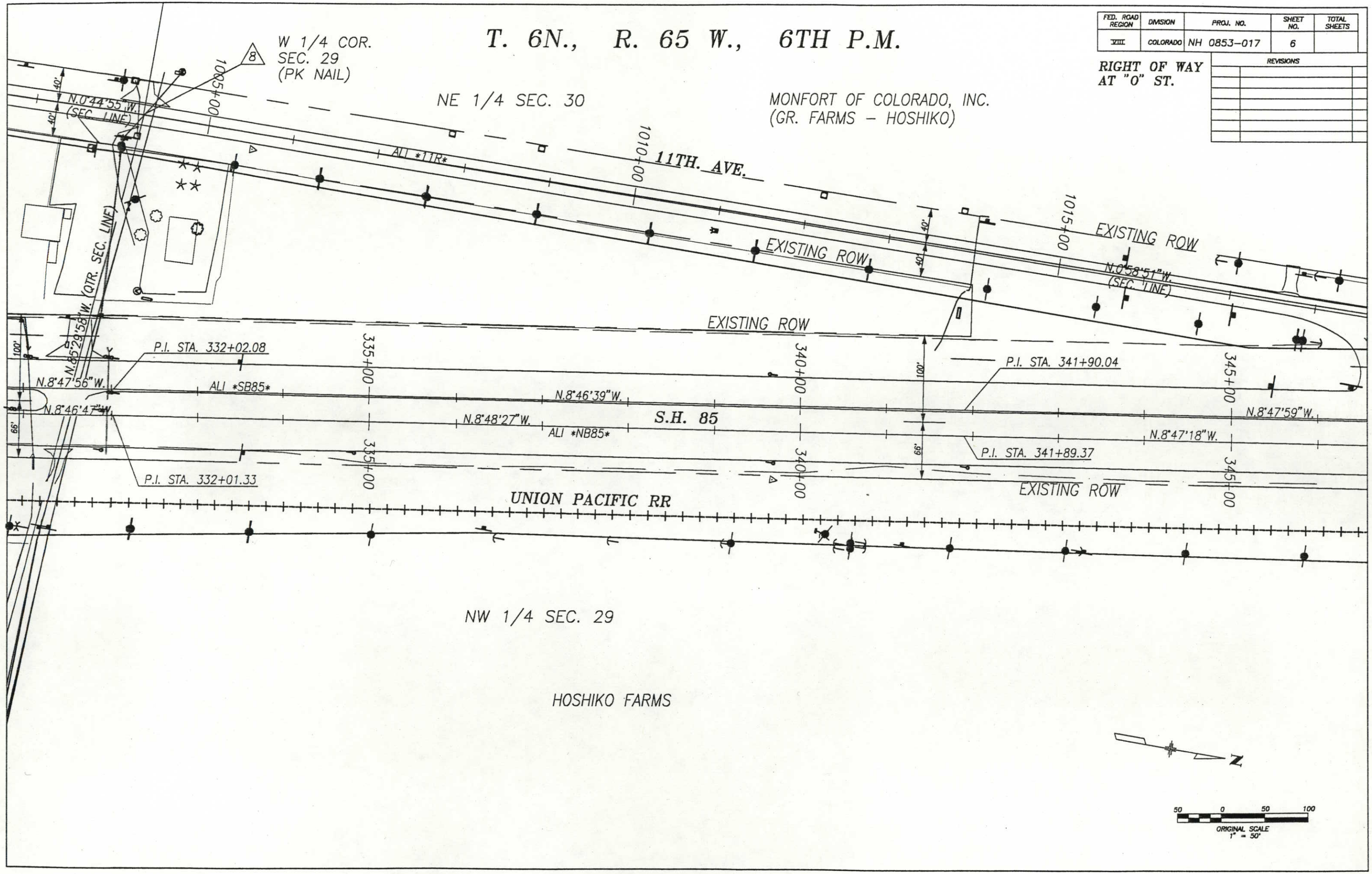

FED. ROAD REGION	DIVISION	PROJ. NO.	SHEET NO.	TOTAL SHEETS
VIII	COLORADO	NH 0853-017	7	

RIGHT OF WAY AT "O" ST.

REVISIONS		

T. 6N., R. 65 W., 6TH P.M.

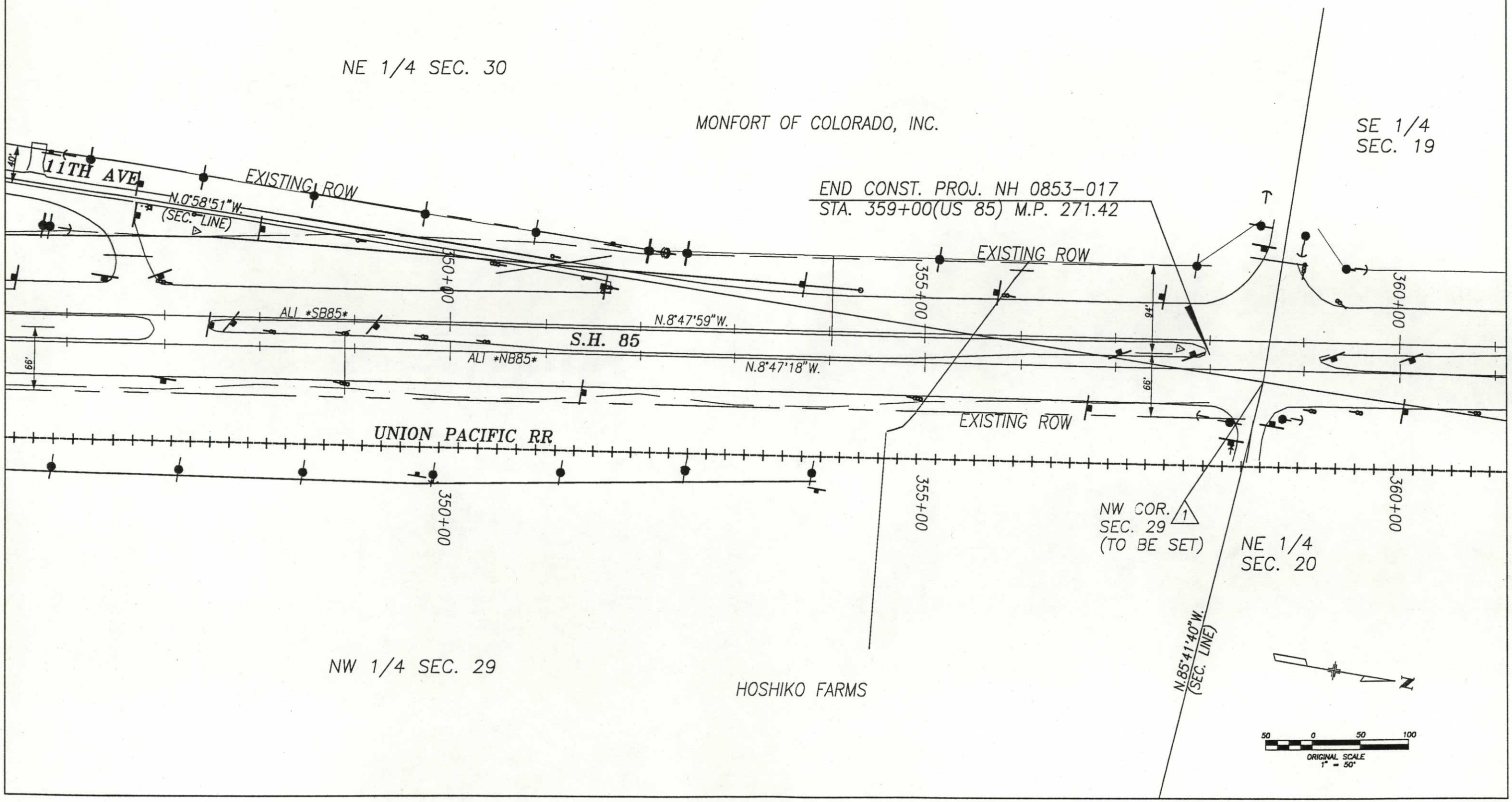

FED. ROAD REGION	DIVISION	PROJ. NO.	SHEET NO.	TOTAL SHEETS
VIII	COLORADO	NH 0853-017	8	

RIGHT OF WAY AT "O" ST.

REVISIONS		

T. 6N., R. 65 W., 6TH P.M.

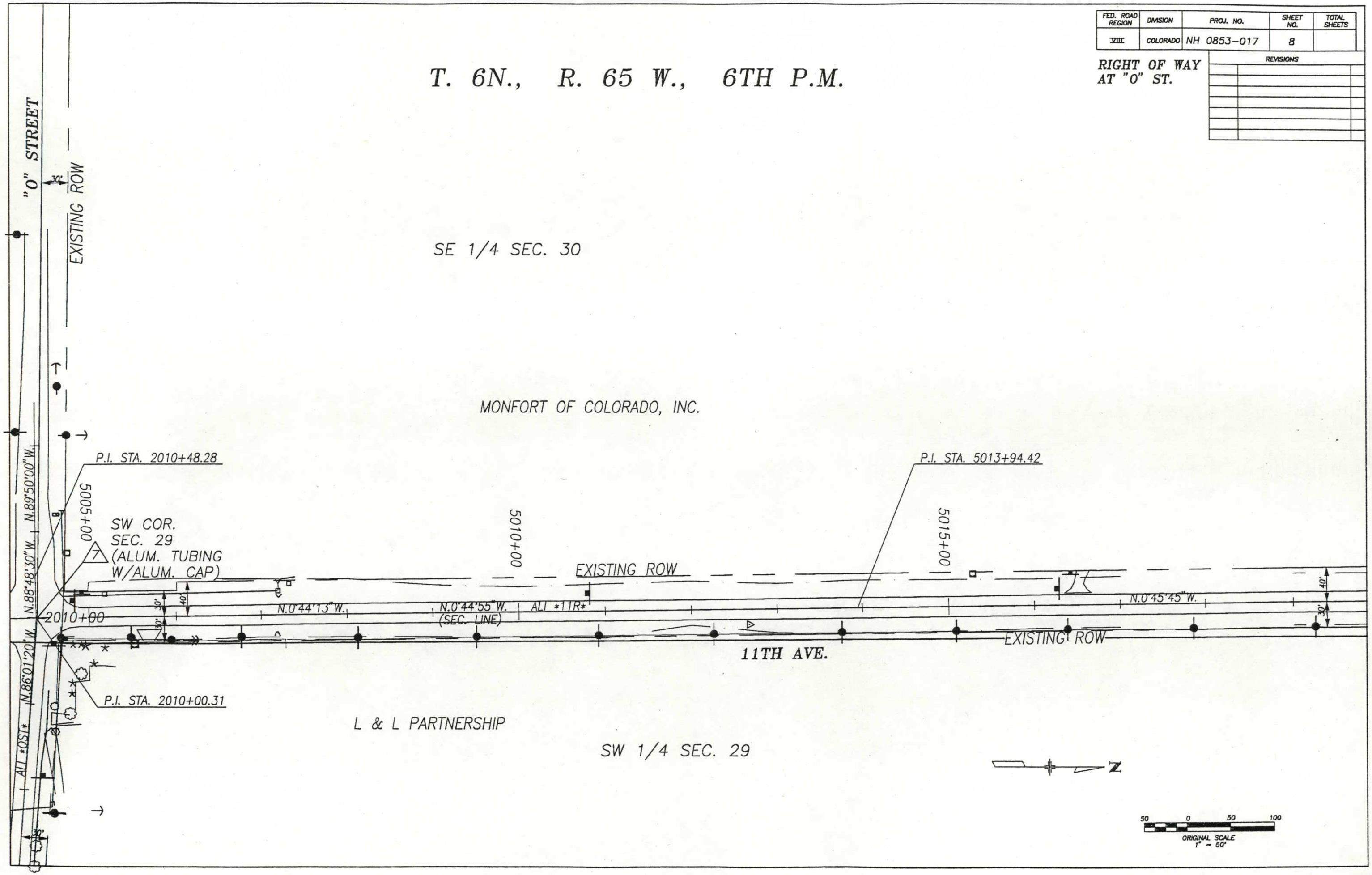

FED. ROAD REGION	DIVISION	PROJ. NO.	SHEET NO.	TOTAL SHEETS
VIII	COLORADO	NH 0853-017	9	

RIGHT OF WAY
AT "O" ST. (GREELEY) PH. 1

REVISIONS		
10/06/94	DELETE ACCESS CONTROL WITHIN 11TH AVE.	JTO

T. 6N., R. 65 W., 6TH P.M.

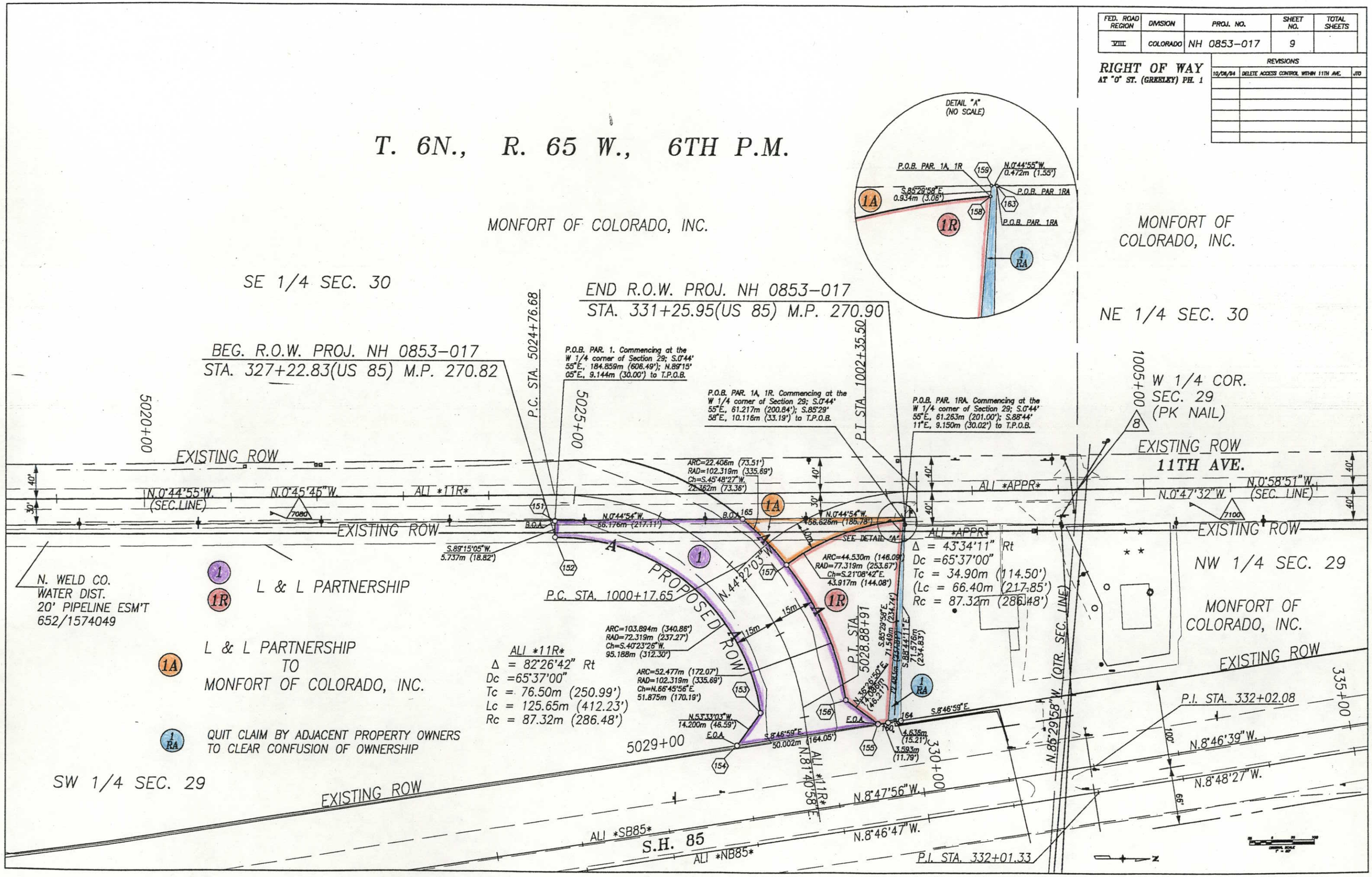

FED. ROAD REGION	DIVISION	PROJ. NO.	SHEET NO.	TOTAL SHEETS
VIII	COLORADO	NH 0853-017	10	

RIGHT OF WAY AT "O" ST. OWNERSHIP MAP

REVISIONS

T. 6 N., R. 65 W., 6TH P.M.

MONFORT OF COLORADO, INC.
(GR. FARMS - HOSHIKO)
P.O. BOX G
GREELEY, CO 80632
1003/1934816
E 1/2 SE 1/4 SEC. 30
SUBJ. TO:
PIPELINE EASEMENT 1082/2022858
OIL & GAS LEASE 636/1558080
UTILITY EASEMENT 1542/564

NE 1/4 SEC. 30

1/16 SEC. LINE

SE 1/4 SEC. 30

"O" STREET

MONFORT OF COLORADO, INC.
(GR. FARMS - HOSHIKO)
P.O. BOX G
GREELEY, CO 80632
1127/2068413
E 1/2 NE 1/4 SEC. 30
N 200' W 348' NW 1/4 SW 1/4 SEC. 29
W 1/2 NW 1/4 SEC. 29 (W. OF HWY 85)

L & L PARTNERSHIP
1091 "O" STREET
GREELEY, CO 80631
1366/2317676
W 1/2 SW 1/4 SEC. 29
(W. OF HWY. 85)
EXC. 1332/2284115
EXC. 1127/2068413
SUBJ. TO:
OIL & GAS LEASE 965/1888416
UTILITY EASEMENT 1542/557

MONFORT, INC.
1930 AA STREET
GREELEY, CO 80632
1299/2251077

B & G IRRIGATION
1001 "O" STREET
GREELEY, CO 80631
1332/2284115

BEG. R.O.W. PROJ. NH 0853-017
STA. 327+22.83(US 85) M.P. 270.82

END R.O.W. PROJ. NH 0853-017
STA. 331+25.95(US 85) M.P. 270.90

END CONST. PROJ. NH 0853-017
STA. 359+00(US 85 M.P. 271.42

N.0°58'51"W.
SEC. LINE

11TH AVE.

N.0°44'54"W.
SEC. LINE
N.85°44'20"W.
SEC. LINE

N. WELD CO.
WATER DIST.
20' PIPELINE ESM'T
652/1574049

S.H. 85

UNION PACIFIC RR

NW 1/4 SEC. 29

QUIT CLAIM BY ADJACENT PROPERTY OWNERS TO CLEAR CONFUSION OF OWNERSHIP

HOSHIKO FARMS
28607 WCR 50
KERSEY, CO 80644
8250/1746777
W 1/2 NW 1/4 SEC. 29 (E. OF RR)

L & L PARTNERSHIP
TO
MONFORT OF COLORADO, INC.

PRODUCERS LIVESTOCK MARKETING ASSOC.
P.O. BOX P
GREELEY, CO 80632
9190/1840694
W 1/2 SW 1/4 SEC. 29 (E. OF RR)

SW 1/4 SEC. 29

1/16 SEC. LINE

BEG. CONST. PROJ. NH 0853-017
STA. 303+00(US 85) M.P. 270.36

N.85°44'27"W.

S.85°29'58"E.

S.85°41'39"E.

2010+00 2005+00 2001+00 5005+00 5010+00 5015+00 5020+00 5025+00 5029+00 6015+00 6020+00 6025+00 1005+00 1010+00 1015+00 305+00 310+00 315+00 320+00 325+00 330+00 335+00 340+00 345+00 350+00 355+00 360+00

1 1R 1A 1RA

N

200 0 200 400
ORIGINAL SCALE
1" = 200'