FEDERAL ROAD REGION NO	DIVISION	PROJECT NO	SHEET NO
VIII	COLORADO	RF 034-1 (16)	1

AS CONSTRUCTED

NO REVISIONS [ ] REVISED 7-7-77 VOID [ ]

UTILITIES, R.O.W. & PE. OBLIGATED UNDER RF 034-1(10)
(R-1) 4-14-76, C.K.M.—REVISE DATE

STATE DEPARTMENT OF HIGHWAYS
DIVISION OF HIGHWAYS—STATE OF COLORADO

PLAN AND PROFILE OF ~~PROPOSED~~
FEDERAL AID PROJECT NO. RF034-1(16)
STATE HIGHWAY NO. 34
WELD COUNTY

SCALES OF ORIGINAL DRAWINGS

ON PLAN, 1 IN = 100 FT
ON PROFILE { 1 IN = 100 FT HORIZONTAL; 1 IN = 10 FT VERTICAL
GRADE LINE ON PROFILE IS SHOWN AS GRADE OF FINISHED ROAD

AS CONSTRUCTED PLANS
RETURN TO DIST. 4 DESIGN

STA. 302+00 BEGIN RF 034-1(16) =
STA. 302+00 END RF 034-1(15)

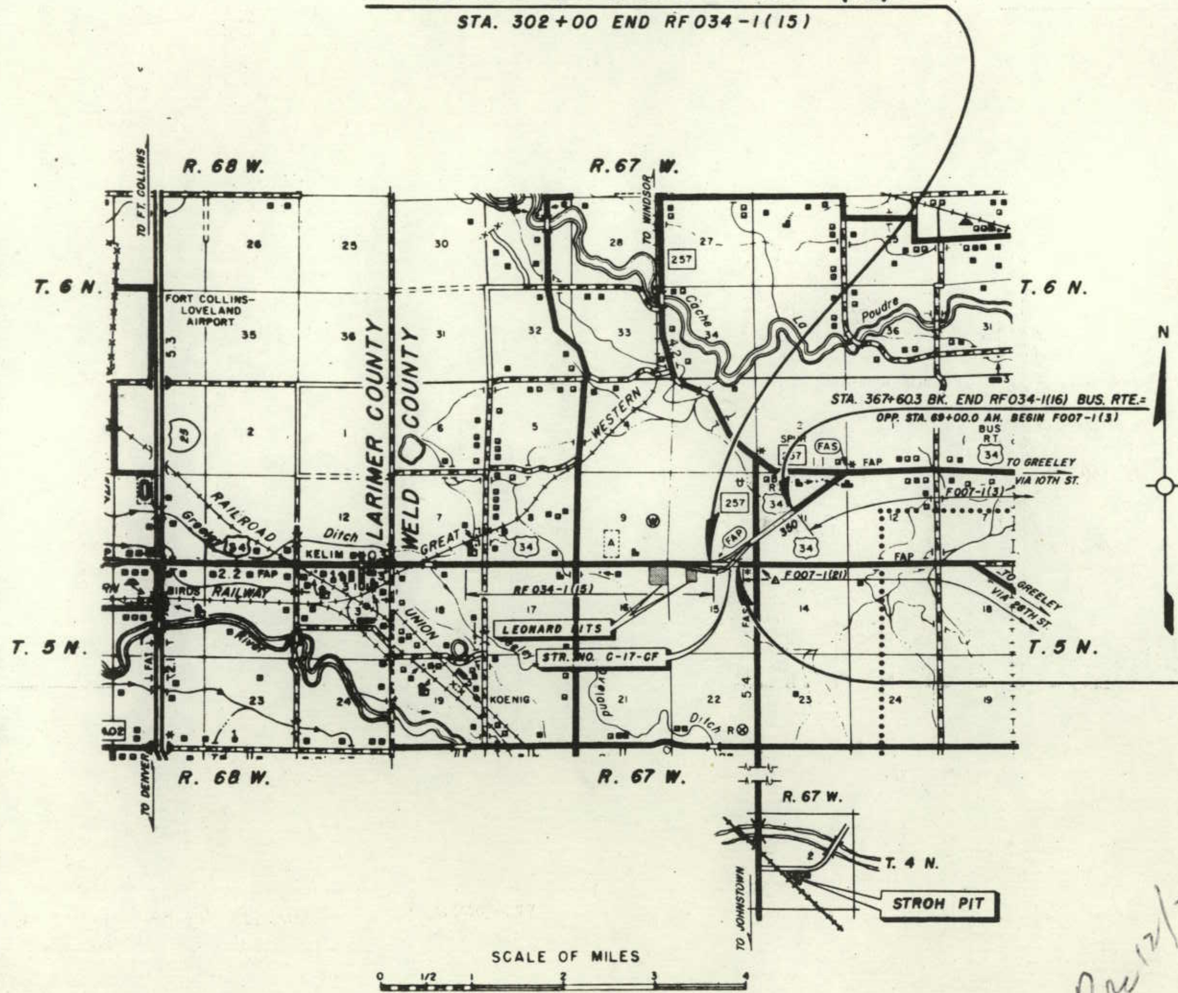

STA. 313+00 END RF 034-1(16)

INDEX OF SHEETS

1	TITLE PAGE, SKETCH MAP AND TABULATION OF LENGTH AND DESIGN DATA		
2 - 2A	TYPICAL SECTIONS AND GENERAL NOTES		
3 - 5	SUMMARY OF APPROXIMATE QUANTITIES		
6	SUMMARY OF EARTHWORK QUANTITIES, EMBANKMENT PROTECTORS AND DETAIL OF INLET (SPECIAL)		
7	FENCING REQUIREMENTS AND TABULATION OF DELINEATORS		
8	BASE COURSE AND SURFACE COURSE PLAN AND SUBBASE PLAN		
9 - 10	PIT SKETCHES		
11 - 12	STRUCTURE QUANTITIES		
13	INLET TYPE C (SPECIAL FOR THIS PROJECT)		
14	DETAILS OF INTERCHANGE AND LIGHTING, STA. 308+		
15	DETAILS OF INTERSECTION AND LIGHTING, STA. 333+		
16 - 33	DETAILS OF BRIDGE, STA. 313+		
34 - 36	ALIGNMENT AND PLAN SHEETS		
37 - 40	PROFILE SHEETS		
41 - 56	SIGNING PLANS		
57 - 67	Cross Section Sheets - Borrow Pits		
68 - 71	Cross section Sheets - Roadway		
72 - 74	Cross section Sheets		
75	Tabulation of Earthwork		
	"M" STANDARDS Added Quantities		
M-100-A	STANDARD SYMBOLS		5-11-73
M-203-B	APPROACH ROADS, FLARING, CUT SLOPE TREATMENT, BRIDGE + CREST WIDENING		12-11-72
M-203-C	DITCH TYPES		7-23-68
M-203-SD	SUPERELEVATION OF CURVES - DIVIDED HIGHWAYS		3-24-75
(R-1) M-206-AB	EXCAVATION AND BACKFILL FOR STRUCTURES	(3 SHEETS)	3-26-76
M-500-A	LETTERS AND FIGURES FOR STRUCTURE NUMBERS		3-28-75
M-603-CA	CONCRETE AND METAL END SECTIONS		8-21-75
M-603-RC	REINFORCED CONCRETE PIPE		8-29-72
M-604-D	STEPS FOR MANHOLES AND INLETS		7-23-68
M-606-B	GUARD RAIL, TYPE 5, BOX BEAM MEDIAN BARRIER - STEEL	(3 SHEETS)	11-6-74
M-607-A	WIRE FENCE AND GATES	(2 SHEETS)	10-15-75
M-609-A	CURBS AND GUTTERS		1-19-76
M-612-A	MARKER POSTS AND BENCH MARKS		6-30-71
M-613-AA	HIGHWAY LIGHTING		9-16-70
M-614-TB	TRAFFIC SIGNING FOR HIGHWAY CONSTRUCTION	(3 SHEETS)	11-22-71
	"S" STANDARDS		
S-612-51A	TYPICAL DELINEATOR INSTALLATIONS	(2 SHEETS)	10-26-72
S-614-2A	STANDARD OVERHEAD SIGNS, SIGN BRIDGES, MISCELLANEOUS DETAILS		3-11-69
S-614-14A	ATTACHMENT DETAILS FOR OVERHEAD SIGN PANELS		3-11-69
S-614-15B	LIGHT FIXTURE AND SAFETY WALKWAY DETAILS	(3 SHEETS)	1-9-76
S-614-17A	OVERHEAD SIGNS, INSTRUCTIONS AND EXAMPLES		4-10-73
S-614-18A	TYPICAL POLE MOUNT SIGN INSTALLATION		1-14-71
S-614-28B	FLASHING YELLOW BEACON AND SIGN INSTALLATION	(2 SHEETS)	9-5-69
S-614-52A	BARRICADES, DRUMS AND VERTICAL PANEL CHANNELIZING DEVICES		12-4-74

TABULATION OF LENGTH & DESIGN DATA

STATION	ROADWAY LIN. FT.
302+00 BEGIN RF 034-1(16) = 302+00 END RF 034-1(15)	1,100.0
313+00 END RF 034-1(16)	
TOTAL .	1,100.0

SUMMARY	LIN. FT.	MILES
TOTAL (NET AND GROSS LENGTH)	1,100.0	0.208

DESIGN DATA

MAXIMUM DEGREE OF CURVE	NONE
MAXIMUM GRADE	0.6702 %
MINIMUM S.S.D. — HORIZONTAL	> 900 FT.
MINIMUM S.S.D. — VERTICAL	> 1300 FT.
MAXIMUM DESIGN SPEED	70 M.P.H.
(R-1) 1996 DESIGN TRAFFIC VOLUME	5,050 A.D.T.; 610 D.H.V.

C. K. M.

DIVISION OF HIGHWAYS

APPROVED E. N. Haase 3/15/76
CHIEF ENGINEER DATE

AS CONSTRUCTED INFORMATION

CONTRACTOR Mountain Aggregates Inc
Resident ENGINEER L. G. Dunan
(Project or Resident)
PROJECT STARTED May 24, 1976
PROJECT COMPLETED July 7, 1977
AS CONSTRUCTED PLANS APPROVED J. Gelterson
DCE 10/19/77
TITLE DATE

Rec 12/21/77
Constr. Dec

DEPARTMENT OF TRANSPORTATION
FEDERAL HIGHWAY ADMINISTRATION

APPROVED ______ DATE ______

DIVISION ADMINISTRATOR

TLE SHEET

ION OF HIGHWAYS, STATE OF COLORADO
H. FORM NO. 126
1969

FEDERAL ROAD REGION NO.	DIVISION	PROJ. NO.	SHEET NO.	TOTAL SHEETS
VIII	COLORADO	RF 034-1(6)	2	

AS CONSTRUCTED
REVISED 7-7-77 VOID

TYPICAL CROSS SECTIONS

STA. 302+ TO STA. 313 + — 34 BY-PASS ROUTE
*STA. 324+ TO STA. ~~348~~ 356+ — 34 BUSINESS ROUTE

SEE STANDARDS FOR DETAILS OF CUT SLOPE TREATMENT, FLARING AND WIDENING.

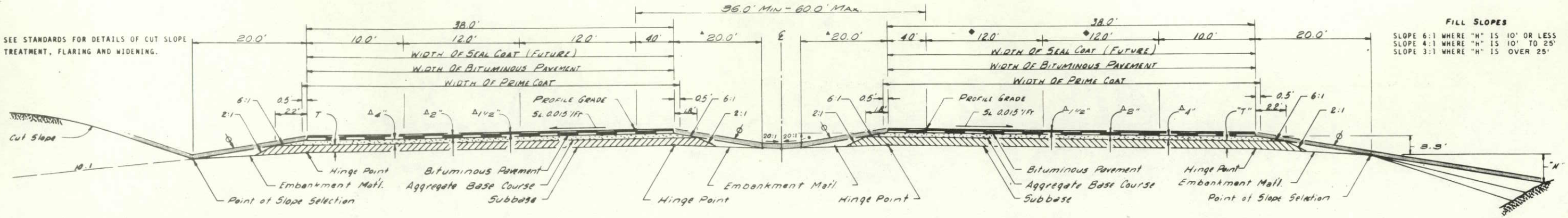

FILL SLOPES

SLOPE 6:1 WHERE "H" IS 10' OR LESS
SLOPE 4:1 WHERE "H" IS 10' TO 25'
SLOPE 3:1 WHERE "H" IS OVER 25'

EXCAVATION BELOW 6:1 SLOPE AND/OR 10:1 SLOPE WILL NOT BE PERMITTED.

▲ 14' FROM STA. 324+55 TO 348+00 BUSINESS ROUTE (*2.3')

Δ APPROXIMATE THICKNESS

Ø THE CONTRACTOR WILL BE REQUIRED TO PLACE TOPSOIL TO THIS LINE AFTER COMPLETION OF PAVING OPERATION.

MATERIAL SHALL BE PLACED IN SEPARATE COURSES AT THE FOLLOWING APPROXIMATE RATES PER 100 LIN. FT. OF ROADWAY

BITUMINOUS PAVEMENT	TOP LAYER	70 TONS	(GRADING EX)
	BOTTOM LAYER	93 TONS	(GRADING E)
AGGREGATE BASE COURSE		178 TONS	

THE RATES SHOWN HAVE BEEN DETERMINED FROM INFORMATION AVAILABLE AT THE TIME OF DESIGN. RATES SHOULD BE ADJUSTED DURING CONSTRUCTION TO OBTAIN THE REQUIRED APPROXIMATE THICKNESS.

THE DEPTH AND WIDTH OF THE SIDE DITCH SHALL BE VARIED WHERE NECESSARY IN ORDER TO PROVIDE PROPER DRAINAGE.

BREAK POINTS ON SLOPES AND IN BOTTOMS OF DITCHES SHALL BE ROUNDED ON CONSTRUCTION FOR A PLEASING APPEARANCE.

◆ TRANSITION FROM 24.0' TO 12.0', STA. 340+ TO 346+

*STA. 324+ TO 348+ BUSINESS ROUTE

(WESTBOUND LANE)

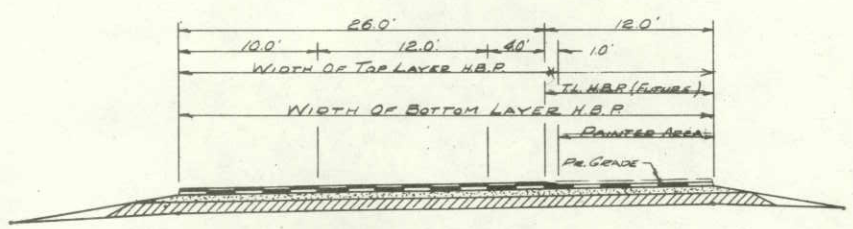

TRANSITION FROM STA. 316+ TO 323+ W.B. BUS. RTE.

GENERAL NOTES

FOR PRELIMINARY PLAN QUANTITIES OF BITUMINOUS MATERIALS THE FOLLOWING RATES OF APPLICATION WERE USED:

PRIME COAT MC-70 @ 0.30 GALS. PER SQ. YD.
TACK COAT CSS-1 @ 0.10 GALS. OF MIXTURE PER SQ. YD. (DILUTED 1:1)

RATES OF APPLICATION SHALL BE AS DETERMINED BY THE ENGINEER AT THE TIME OF APPLICATION.

ANY LAYER OF BITUMINOUS PAVEMENT THAT IS TO HAVE A SUCCEEDING LAYER PLACED THEREON SHALL BE COMPLETED FULL WIDTH BEFORE SUCCEEDING LAYER IS PLACED.

A SKI TYPE DEVICE AT LEAST 30 FEET IN LENGTH AND SHORT SKI OR SHOE SHALL BE FURNISHED WITH EACH BITUMINOUS PAVER EQUIPPED WITH AN AUTOMATIC CONTROL SYSTEM.

ROAD APPROACHES WHICH REQUIRE BITUMINOUS PAVEMENT SHALL BE PRIMED AND A 2" THICKNESS OF PAVEMENT PLACED AS FOLLOWS:

PUBLIC APPROACHES AND ENTRANCES TO BUILDINGS OR RESIDENCES SHALL BE PAVED 50 FT. OUT FROM EDGE OF SHOULDER OR TO THE RIGHT OF WAY LINE WHICHEVER IS LESS. FIELD ENTRANCES SHALL BE PAVED 4 FT. OUT FROM EDGE OF SHOULDER.

DILUTED EMULSIFIED ASPHALT SHALL BE USED AS A DUST PALLIATIVE WHERE REQUIRED AND SHALL CONSIST OF A DILUTION OF CSS-1 AND WATER, THE PORTIONS OF WHICH SHALL BE 9 PARTS WATER AND 1 PART ASPHALT, BASED ON VOLUME MEASUREMENT. LOCATIONS SHALL BE AS ORDERED.

DEPTH OF MOISTURE-DENSITY CONTROL FOR THIS PROJECT SHALL BE AS FOLLOWS:

FULL DEPTH OF ALL EMBANKMENTS
BASES OF CUTS AND FILLS 6 INCHES

EXCAVATION REQUIRED FOR COMPACTION OF BASES OF CUTS AND FILLS WILL BE CONSIDERED AS SUBSIDIARY TO THAT OPERATION AND WILL NOT BE PAID FOR SEPARATELY.

THE MINIMUM THICKNESS OF TOPSOIL SHALL BE 4 INCHES. APPROXIMATELY ~~10,100~~ 16,860 Cu Yds OF TOPSOIL ~~TO BE~~ OBTAINED WITHIN ROADWAY LIMITS AND STOCKPILED WITHIN ROW WAS

EARTH SLOPES SHALL BE DISCED OR ROUGHENED BY OTHER APPROVED METHODS FOR MULCHING OR EROSION PROTECTION.

~~IT IS ESTIMATED THAT 7,000~~ 3,392.5 HOURS OF FLAGGING FOR CONTROLLING TRAFFIC ~~WILL BE~~ WERE REQUIRED FOR THIS PROJECT.

SEEDING RECOMMENDATIONS:

COMMON NAME	BOTANICAL NAME	%Purity	%Germ.	PLS/LBS/ACRE
INTERMEDIATE WHEATGRASS	AGROPYRON INTERMEDIUM	90	85	5
TALL WHEATGRASS	AGROPYRON ELONGATUM	94	90	6
SWITCHGRASS	PANICUM VIRGATUM	90	80	4
LITTLE BLUESTEM	ANDROPOGEN SCOPARIUS	40	50	2
RANGER ALFALFA	MEDICAGO SATIVA	95	90	4
				21

MULCHING: 1-1/2 TONS/ACRE NATIVE HAY

FERTILIZER:
PROVIDING: 50 LBS/ACRE AVAILABLE NITROGEN
100 LBS/ACRE SUPERPHOSPHATE
IN THE FORM OF: - 278 LBS/ACRE OF COMMERCIAL FERTILIZER CONTAINING 18% AVAILABLE NITROGEN (18-0-0)
- 222 LBS/ACRE OF COMMERCIAL FERTILIZER CONTAINING 45% SUPERPHOSPHATE (0-45-0)
TOTALING: 500 LBS/ACRE COMMERCIAL FERTILIZER

N OF HIGHWAYS, STATE OF COLORADO
FORM NO. 126
ARCH, 1974

FEDERAL ROAD REGION NO.	DIVISION	PROJ. NO.	SHEET NO.	TOTAL SHEETS
VIII	COLORADO	RF034-1(16)	2A	

AS CONSTRUCTED

NO REVISIONS ☐ REVISED 7-7-77 VOID ☐

TYPICAL CROSS SECTIONS

(2 — LANE SECTION)

BUSINESS ROUTE

*STA. ~~348~~ 363+ TO STA. 367+

SEE STANDARDS FOR DETAILS OF CUT SLOPE TREATMENT, FLARING AND WIDENING.

FILL SLOPES:

SLOPE 6:1 WHERE "H" IS 10' OR LESS
SLOPE 4:1 WHERE "H" IS 10' TO 25'
SLOPE 3:1 WHERE "H" IS OVER 25'

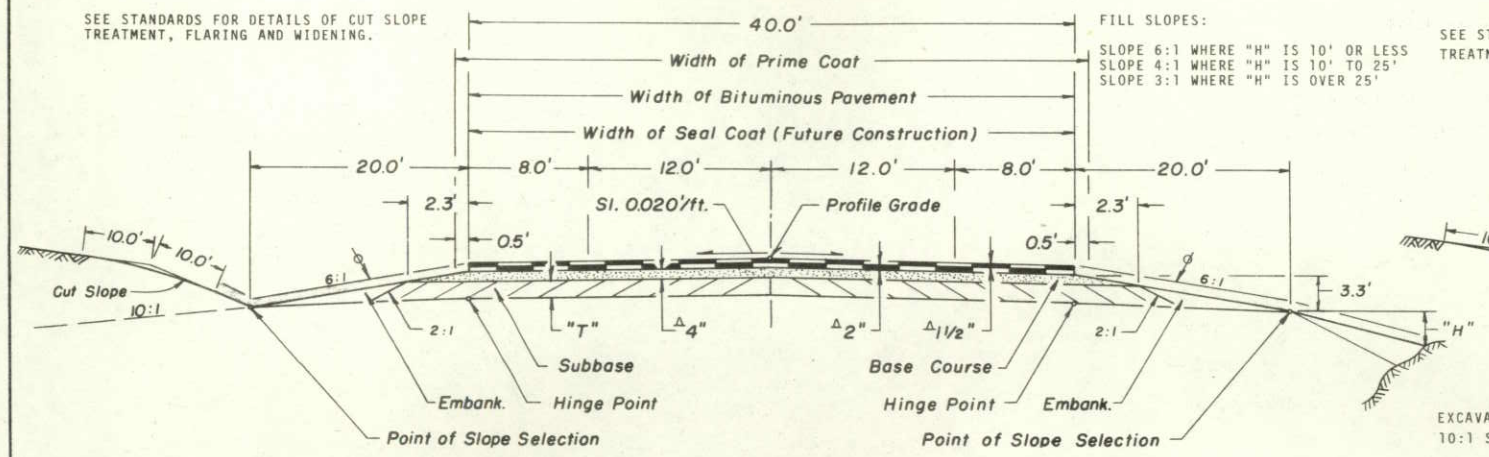

ΔAPPROXIMATE THICKNESS

THE DEPTH AND WIDTH OF THE SIDE DITCH SHALL BE VARIED WHERE NECESSARY IN ORDER TO PROVIDE PROPER DRAINAGE.

EXCAVATION BELOW 6:1 SLOPE AND/OR 10:1 SLOPE WILL NOT BE PERMITTED.

BREAK POINTS ON SLOPES AND IN BOTTOMS OF DITCHES SHALL BE ROUNDED ON CONSTRUCTION FOR A PLEASING APPEARANCE.

MATERIAL SHALL BE PLACED IN SEPARATE COURSES AT THE FOLLOWING APPROXIMATE RATES PER 100 LIN. FT. OF ROADWAY:

BITUMINOUS PAVEMENT	TOP LAYER	37	TONS (GRADING EX)
	BOTTOM LAYER	49	TONS (GRADING E)
BASE COURSE		94	TONS

THE RATES SHOWN HAVE BEEN DETERMINED FROM INFORMATION AVAILABLE AT THE TIME OF DESIGN. RATES SHOULD BE ADJUSTED DURING CONSTRUCTION TO OBTAIN THE REQUIRED APPROXIMATE THICKNESS.

Ø THE CONTRACTOR WILL BE REQUIRED TO PLACE TOPSOIL TO THIS LINE AFTER COMPLETION OF PAVING OPERATION.

* TRANSITION FROM 4-LANE TO 2-LANE SECTION, STA. ~~348+~~ 358+ TO ~~355+~~ 365+ BUS. RTE.

(4 — LANE SECTIONS)

WEST BOUND BUSINESS ROUTE

STA. 302+ TO STA. 323+

SEE STANDARDS FOR DETAILS OF CUT SLOPE TREATMENT, FLARING AND WIDENING.

FILL SLOPES:

SLOPE 6:1 WHERE "H" IS 10' OR LESS
SLOPE 4:1 WHERE "H" IS 10' TO 25'
SLOPE 3:1 WHERE "H" IS OVER 25'

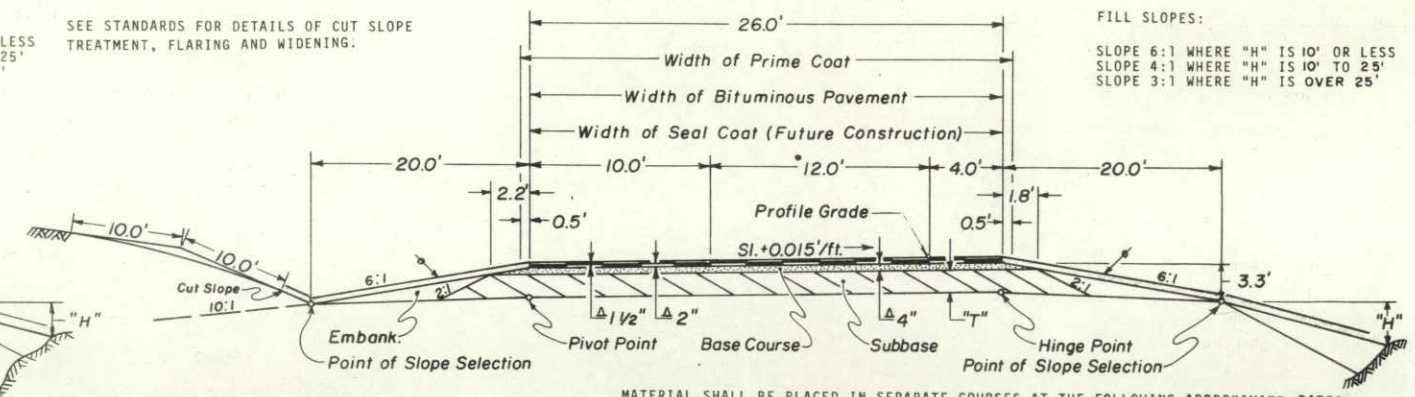

EXCAVATION BELOW 6:1 SLOPE AND/OR 10:1 SLOPE WILL NOT BE PERMITTED.

BREAK POINTS ON SLOPES AND IN BOTTOMS OF DITCHES SHALL BE ROUNDED ON CONSTRUCTION FOR A PLEASING APPEARANCE.

* TRANSITION FROM 12.0' TO 24.0', STA. 316+ TO 323+ W.B. BUS. RTE.

MATERIAL SHALL BE PLACED IN SEPARATE COURSES AT THE FOLLOWING APPROXIMATE RATES PER 100 LIN. FT. OF ROADWAY:

BITUMINOUS PAVEMENT	TOP LAYER	24	TONS (Grading EX)
	BOTTOM LAYER	32	TONS (Grading E)
BASE COURSE		63	TONS

THE RATES SHOWN HAVE BEEN DETERMINED FROM INFORMATION AVAILABLE AT THE TIME OF DESIGN. RATES SHOULD BE ADJUSTED DURING CONSTRUCTION TO OBTAIN THE REQUIRED APPROXIMATE THICKNESS.

EAST BOUND BUSINESS ROUTE

STA. 287+ TO STA. 326+

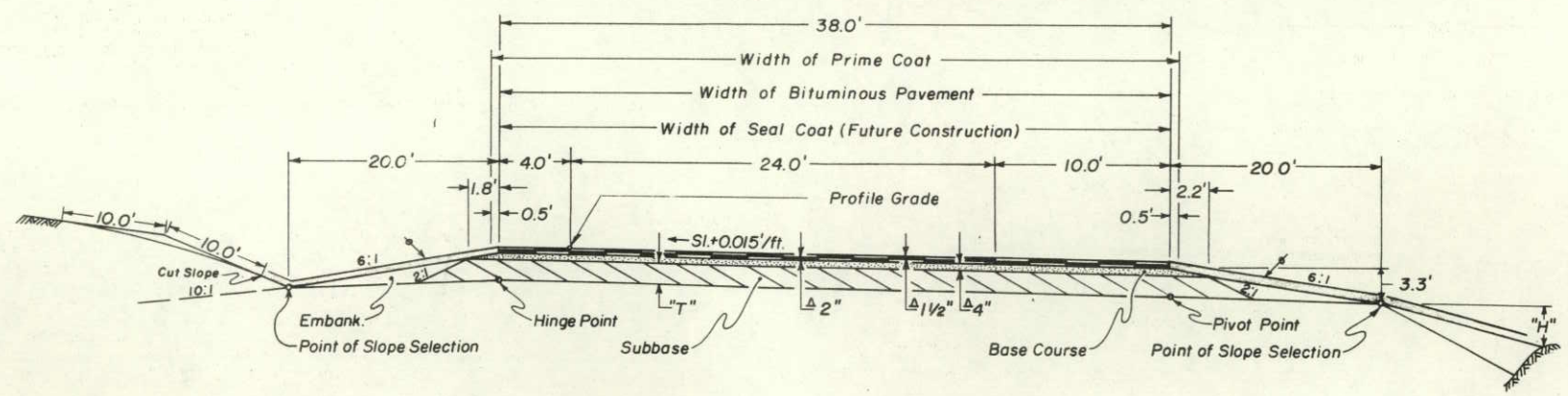

ΔApproximate Thickness

THE DEPTH AND WIDTH OF THE SIDE DITCH SHALL BE VARIED WHERE NECESSARY IN ORDER TO PROVIDE PROPER DRAINAGE.

MATERIAL SHALL BE PLACED IN SEPARATE COURSES AT THE FOLLOWING APPROXIMATE RATES PER 100 LIN. FT. OF ROADWAY:

BITUMINOUS PAVEMENT	TOP LAYER	35	TONS (Grading EX)
	BOTTOM LAYER	47	TONS (Grading E)
BASE COURSE		89	TONS

THE RATES SHOWN HAVE BEEN DETERMINED FROM INFORMATION AVAILABLE AT THE TIME OF DESIGN. RATES SHOULD BE ADJUSTED DURING CONSTRUCTION TO OBTAIN THE REQUIRED APPROXIMATE THICKNESS.

Ø THE CONTRACTOR WILL BE REQUIRED TO PLACE TOPSOIL TO THIS LINE AFTER COMPLETION OF PAVING OPERATION.

SUMMARY OF ~~APPROXIMATE~~ FINAL QUANTITIES

AS CONSTRUCTED: NO REVISIONS [ ] REVISED [7-7-77] VOID [ ]

FEDERAL ROAD REGION NO.	DIVISION	PROJ. NO.	SHEET NO.	TOTAL SHEETS
VIII	COLORADO	RF 034-1(16)	3	

INDEX BOOK	INDEX PAGE	INDEX SHEET	CONTRACT ITEM NO.	CONTRACT ITEM	UNIT	ROADWAY Plan	ROADWAY Final	ROADWAY Diff	STRUCTURE NO. C-17-FA Plan	STRUCTURE Final	STRUCTURE Diff	PROJECT TOTALS Plan	PROJECT TOTALS Final	PROJECT TOTALS Diff	Ref.
			202	REMOVAL OF STRUCTURE	EACH	4	4	–				4	4	–	Sht. 11 & 12
			202	REMOVAL OF GROUND SIGN	EACH	24	26	+ 2				24	26	+2	305
			202	REMOVAL OF SIGN PANEL	EACH	1	1	–				1	1	–	305
			202	REMOVAL OF FENCE	LIN. FT.	3,600	3,586	- 14				3,600	3,586	- 14	305
			203	UNCLASSIFIED EXCAVATION	CUBIC YARD	231,000						231,000	223,447	-7553	Sht 75
			203	BORROW	CUBIC YARD	111,000	113,749	+ 2,749				111,000	113,749	+2,749	Sht 57-67 X. Sects.
			203	STRIPPING	CUBIC YARD	64,700						64,700	11,600	-53,100	Bk 9 Pg 50
			203	COMPACTION (AASHTO T 99)	CUBIC YARD	267,000						267,000	298,930	+31,930	Sht 75
			204	HAUL	YARD MILE	144,100						144,100	142,724	-1376	305
			204	HAUL	TON MILE	389,000	440,529	+ 51,529				389,000	440,529	+51,529	Form 724
			206	STRUCTURE EXCAVATION	CUBIC YARD	220	309.4	+ 89.4	510	353	- 157	730	662.4	- 67.6	305 Sht 11-12-16
			206	STRUCTURE BACKFILL (CLASS 2)	CUBIC YARD	255	302.5	+ 47.5	455	455	—	710	757.5	+ 47.5	305 Sht. 11-12-16
			207	TOPSOIL (HAUL)	CUBIC YARD	18,100	16,860	- 1,240				18,100	16,860	-1,240	Bk 9 Pg 52
			209	WETTING	M. GAL.	11,760	7,370.9	- 4,389.1				11,760	7,370.9	-4,389.1	Form 7
			210	RESET MAILBOX STRUCTURE	EACH	1	1	—				1	1	—	Sht 12
			210	RESET GROUND SIGN	EACH	31	29	-2				31	29	-2	305
			210	RESET ILLUMINATED GROUND SIGN	EACH	2	2	—				2	2	—	305
			210	REGET FENCE	LIN. FT	1,200	1,036	- 164				1,200	1,036	-164	305
			212	SEEDING (NATIVE)	Lb.	720	1,215.5 ~~1,275~~	495.5 + ~~555~~				720	1,215.5 ~~1,275~~	495.5 + ~~555~~	305
			212	FERTILIZER	Lb.	16,000	~~17,040~~ 16,510	+ ~~1,040~~ 510				16,000	~~17,040~~ 16,510	~~+1,040~~ 510	305
			212	SOIL PREPARATION (NATIVE)	ACRE	32	53	+ 21				32	53	+ 21	305
			213	MULCHING	TON	51	~~85~~ 79.20	+ ~~34~~ 28.2				51	~~85~~ 79.2	+ ~~34~~ 28.2	305
			304	AGGREGATE BASE COURSE (CLASS 1)	TON	57,600	58,804.36	+ 1,204.36				57,600	58,804.36	+ 1,204.36	Form 87
			304	AGGREGATE BASE COURSE (CLASS 6)	TON	16,500	20,493.75	+ 3,993.75				16,500	20,493.75	+3,993.75	Form 87
			403	HOT BITUMINOUS PAVEMENT (GRADING E)(HAUL & ASPHALT)	TON	8,600	9,679.55	+ 1,079.55				8,600	9,679.55	+ 1,079.55	Form 87
			403	HOT BITUMINOUS PAVEMENT (GRADING EX)(HAUL & ASPHALT)	TON	6,221	7,834.35	+ 1,613.35	179	195.15	+ 16.15	6,400	8,029.50	+1,629.5	SHT. 16 Form 87
			411	EMULSIFIED ASPHALT (CSS-1)	GALLON	27,900	1,760	-26,140				27,900	1,760	-26,140	305 Computer sheet
			411	LIQUID ASPHALTIC MATERIAL (MC-70)	GALLON	24,100	16,635	- 7,465				24,100	16,635	- 7,465	Computer Sheet 305
			502	DRILLING HOLE TO FACILITATE PILE DRIVING	LIN. FT				600	600	—	600	600	—	SHT. 16
			502	STEEL PILING (HP 10 x 42)	LIN. FT.				820	758.8	- 61.2	820	758.8	- 67.2	SHT 16
			507	STEEL PILE CUTOFF	LIN. FT.					15.9	+ 15.9	0	15.9	+ 15.9	SHT 16
			507	CONCRETE SLOPE AND DITCH PAVING (REINFORCED)	CUBIC YARD	3	2.2	-0.8				3	2.2	-0.8	SHT. 11-12
			507	CONCRETE SLOPE AND DITCH PAVING (REINFORCED) (COLORED)	CUBIC YARD				210	181.7	- 28.3	210	181.7	- 28.3	SHT 16

SUMMARY OF ~~APPROXIMATE~~ FINAL QUANTITIES

AS CONSTRUCTED
NO REVISIONS [ ] REVISED 7-7-71 VOID [ ]

FEDERAL ROAD REGION NO.	DIVISION	PROJ. NO.	SHEET NO.	TOTAL SHEETS
VIII	COLORADO	RF 034-1(16)	4	

INDEX BOOK	INDEX PAGE	INDEX SHEET	CONTRACT ITEM NO.	CONTRACT ITEM	UNIT	ROADWAY Plan	ROADWAY Final	ROADWAY Diff	STRUCTURE NO. C-17-FA Plan	STRUCTURE Final	STRUCTURE Diff	PROJECT TOTALS Plan	PROJECT TOTALS Final	PROJECT TOTALS Diff	Ref.
			509	STRUCTURAL STEEL (GALVANIZED)	LB.				26,596	26,596	—	26,596	26,596	—	SHT. 16
			515	WATERPROOFING (MEMBRANE)	SQUARE YARD				1,635	1,635	—	1,635	1,635	—	SHT 16
			518	BRIDGE COMPRESSION JOINT SEALER	LIN. FT.				24	24	—	24	24	—	SHT 16
			601	CONCRETE CLASS A (BRIDGE)	CUBIC YARD				184	184	—	184	184	—	SHT 16
			601	CONCRETE CLASS A (WALL)	CUBIC YARD				28	28	—	28	28	—	SHT 16
			601	CONCRETE CLASS S (BRIDGE)	CUBIC YARD				1,310	1,310	—	1,310	1,310	—	SHT 16
			601	CMO 0809 - Price Reduction - Concrete Class "S"	Lump Sum				•	•		•	•		
			602	REINFORCING STEEL	LB.				245,230	245,230		245,230	245,230	—	SHT. 16
			603	12 INCH CORRUGATED STEEL PIPE	LIN. FT.	140	148	+8				140	148	+8	SHT 6
			603	24 INCH REINFORCED CONCRETE PIPE	LIN. FT.	422	492	+70				422	492	+70	SHT 11 & 12
			603	36 INCH REINFORCED CONCRETE PIPE	LIN. FT.	182	208	+26				182	208	+26	SHT 11 & 12
			603	24 INCH REINFORCED CONCRETE END SECTION	EACH	7	7	—				7	7	—	SHT 11 & 12
			603	36 INCH REINFORCED CONCRETE END SECTION	EACH	2	2	—				2	2	—	SHT 11 & 12
			604	INLET TYPE C (5 FOOT)	EACH	1	1	—				1	1	—	SHT 11 & 12
			604	INLET TYPE C (15 FOOT)	EACH	1	1	—				1	1	—	SHT 11 & 12
			604	INLET SPECIAL (5 FOOT)	EACH	2	2	—				2	2	—	SHT 6
			606	GUARD RAIL TYPE 5	LIN. FT.	180	180	—				180	180	—	SHT 11 & 12
			606	END ANCHORAGE TYPE 5A	EACH	4	4	—				4	4	—	SHT 11 & 12
			607	END POST	EACH	14	24	+10				14	24	+10	305
			607	CORNER & LINE BRACE POST	EACH	22	18	-4				22	18	-4	305
			607	FENCE BARBED WIRE WITH METAL POSTS	LIN. FT.	15,100	14,819	-281				15,100	14,819	-281	305
			607	20 FOOT GATE DRIVEWAY-DELETED CMO 4992	EACH	1	0	-1				1	0	-1	CMO 4992
			609	CURB TYPE 6 (SECTION M)	LIN. FT.	560	540	-20				560	540	-20	SHT 11 & 12
			612	DELINEATOR (TYPE I)	EACH	96	139	+43				96	139	+43	305
			612	DELINEATOR (TYPE II)	EACH	30	61	+31				30	61	+31	305
			613	3/4 INCH ELECTRICAL CONDUIT	LIN. FT.				65	75	+10	65	75	+10	SHT 16
			613	2 1/2 INCH ELECTRICAL CONDUIT	LIN. FT.				407	417	+10	407	417	+10	SHT 16
			613	3 INCH ELECTRICAL CONDUIT	LIN. FT.	875	859	-16				875	859	-16	305
			613	3 INCH ELECTRICAL CONDUIT (JACKED)	LIN. FT.	180	180	—				180	180	—	305
			613	DIRECT - BURIAL CABLE	LIN. FT.	4,430	4,104	-326				4,430	4,104	-326	305
			613	WIRING	LUMP SUM	•	•	—				•	•	—	305
			613	LUMINAIRE MERCURY VAPOR (WALL TYPE) (11,000 LUMEN)	EACH				2	2	—	2	2	—	SHT 16
				CMO 0802 LIGHTING SIGN BRIDGE STRUCTURE	LUMP SUM	•	•					•	•		

STATE DEPARTMENT OF HIGHWAYS
DIVISION OF HIGHWAYS – STATE OF COLORADO
Form No. 113 (Mylar)
REV. SEPT. 1972

SUMMARY OF ~~APPROXIMATE~~ FINAL QUANTITIES

(R-1) 4-14-76, C.K.M. – Added F/A08

AS CONSTRUCTED		
NO REVISIONS	REVISED 7-7-77	VOID

Federal Road Region No.	Division	Proj. No.	Sheet No.	Total Sheets
VIII	Colorado	RF 034 - 1(16)	5	

Index: Book	Index: Page	Index: Sheet	Contract Item No.	Contract Item	Unit				Roadway Plan	Roadway Final	Roadway Diff.	Structure No. C-17-FA Plan	Structure Final	Structure Diff.		Project Totals Plan	Project Totals Final	Project Totals Diff.	Ref
			613	Luminaire Mercury Vapor (37,000 Lumen)	Each				7	7	—					7	7	—	305
			613	Luminaire Mercury Vapor (Tinted)(37,000 Lumen)	Each				1	1	—					1	1	—	305
			613	Light Standard Aluminum (40 Foot)	Each				8	8	—					8	8	—	305
			613	Concrete Foundation Pad	Each				8	8	—					8	8	—	305
			614	Flagging	Hour				7,000	3,329.5	-3,670.5					7,000	3,329.5	-3670.5	Form 7
			614	Sign Panel (Class I)	Square Foot				47	47						47	47		305
			614	Sign Panel (Class II)	Square Foot				495	495						495	495		305
			614	Sign Panel (Class III)	Square Foot				729	729						729	729		305
			614	Timber Sign Post 4 x 4 Inch	Lin. Ft.				139	139						139	139		305
			614	Timber Sign Post 6 x 6 Inch	Lin. Ft.				635	635						635	635		305
			614	Steel Sign Post (W 10 x 21)	Lin. Ft.				39	39	—					39	39	—	305
			614	Concrete Footing (Type 5)	Each				2	2	—					2	2	—	305
			614	Modification Of Timber Sign Post	Each				13	13	—					13	13	—	306
			614	Sign Bridge Structure (95 to Less Than 100 Foot Frame)	Each				1	1	—					1	1	—	305
			614	Flashing Yellow Beacon	Each				2	2	—					2	2	—	305
			618	Prestressing Steel Wire Or Strand	Lb.							78,026	78,026	—		78,026	78,026	—	SHT 16
			620	Field Laboratory	Each				1	1	—					1	1	—	305
			620	Sanitary Facility	Each				1	1	—					1	1	—	305
			626	Mobilization	Lump Sum				Prorated			Prorated				●	●		
				FORCE ACCOUNT															
				F/A01 Reset Temporary Lighting	Lump Sum				●	●						●	●		
				F/A02 On The Job Trainee	Each				2	2						2	2		
				F/A03 Minor Contract Revisions CMO 0801	Lump Sum				●	●						●	●		
				F/A04 Relocate Water Line	Lump Sum				●							●			
				F/A05 Furnish Power To Signs At Various Locations (Work By Poudre Valley REA Forces)	Lump Sum				●							●			
(R-1)				F/A08 Furnish and Install Ground Fault Interupter and Disconnect	Lump Sum	Deleted CMO 4612			●							●			
				CMO 3232 Additional Grading Due to Grade Change					●	●						●	●		
				STATE FORCES															
				F/A06 Striping Entire Project (Non-Federal Aid)	Lump Sum				●	●						●	●		
				F/A07 Temporary Signing and Striping (Non-Federal Aid)	Lump Sum				●	●						●	●		

AS CONSTRUCTED	FEDERAL ROAD REGION NO.	DIVISION	PROJ. NO.	SHEET NO.	TOTAL SHEETS
NO REVISIONS ☐ REVISED 7-7-77 VOID ☐	VIII	COLORADO	RF 034-1(16)	6	

FINAL TABULATION OF EMBANKMENT PROTECTORS

STATION	SIDE	CURB TYPE 6 (SECTION M) LIN. FT. Plan	LIN. FT. Final	INLET SPECIAL (5 FOOT) EACH Plan	EACH Final	BITUMINOUS SLOPE AND DITCH PAVING TON Plan	TON Final	CORRUGATED STEEL PIPE 12" LIN. FT. Plan	LIN. FT. Final	STRUCTURE EXCAVATION CU. YD. Plan	CU. YD. Final
BUSINESS (E.B.)											
311+15	Lt	50	45	1	1	1.5	1.5	78	86	1	1
315+25	Lt	50	55	1	1	1.5	1.5	62	62	1	1
PROJECT TOTAL		100	100	2	2	3	3	140	148	2	2
		REF.	Form 305		Form 305		Form 305 DOH 87		Form 305		Form 305

DETAIL OF INLET

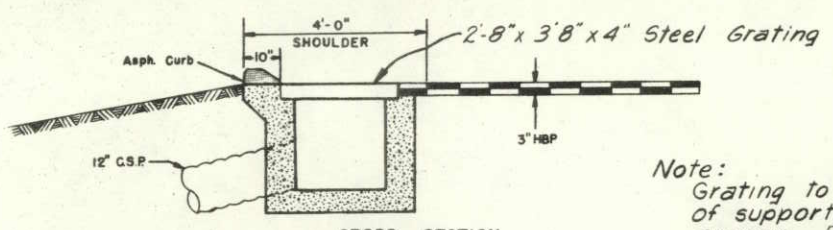

CROSS SECTION

Note:
Grating to be galvanized steel capable of supporting H-20 Loading with approx. 75% open area. Grating to be fabricated as per manufactures recommendations. Grating shall have 1/4" thick end bands. Interior stringers are to be 3/16" thick and are to be placed parallel to the short side of the box.

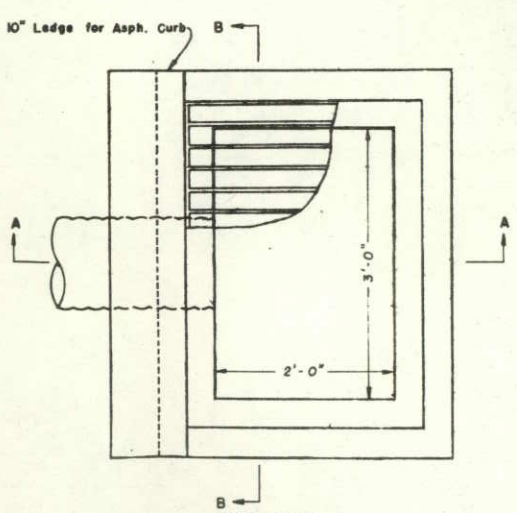

TOP VIEW

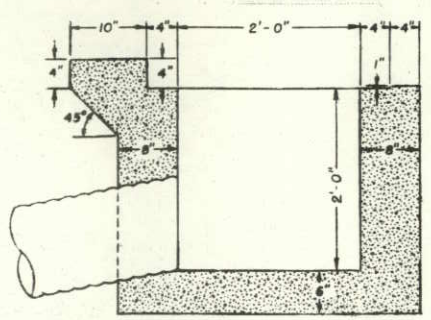

SECTION A-A

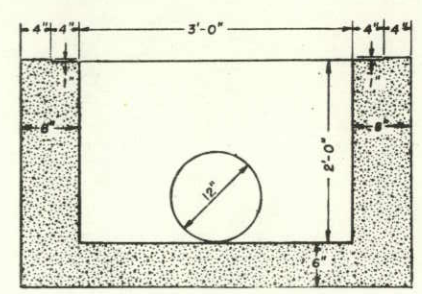

SECTION B-B

FINAL SUMMARY OF EARTHWORK QUANTITIES

INDEX BOOK	PAGE	SHEET		PROJECT TOTALS PLAN	FINAL
			Ø UNCLASSIFIED EXCAVATION	Cu. Yd.	Cu Yd.
		Sheet 75	Roadway (From Cross Section & Electronic Computer)	194,363	201,067
			Structure Quantities as Embankment (in X sects)	~~770~~	66
			Structure Quantities as Excavation (in X sects)	~~400~~	
			Structure Quantities as Ditch (in X sects)	~~30~~	
			Estimate for Cut Slope Treatment (in X sects)	~~300~~	
9	50		Excavation for Topsoil	18,100	16,860
			Excavation for Shoulder Areas	14,110	
			Excavation to Replace Topsoil	2,140	
			Excavation for Grade Change, Bypass CMO# 3232		5,454
			TOTAL FOR PAY QUANTITY	230,213	223,447
			STRIPPING		
9	50		Remove Overburden	41,100	11,600
			Replace Overburden	23,600	11,600
			TOTAL FOR PAY QUANTITY	64,700	23,200
			BORROW		
			For Roadway Embankment	~~87,804~~	
			For Embankment To Replace Topsoil	~~22,300~~	
		Sheets 57-67	TOTAL FOR PAY QUANTITY	~~110,104~~	113,749
			EMBANKMENTS (AASHTO T99) (MOISTURE AND DENSITY CONTROL)		
		Sheet 75	Embankment (Net)	209,015	248,910
			Base of Cut and Fills	27,320	33,094
			Structure Quantities as Embankment (Net)*	1170	66
9	50		Embankment To Replace Topsoil (Net)	18,100	16,860
			Shoulder Areas (Net) *	10,450	
			* Included in Roadway X. sects.		
			TOTAL FOR PAY QUANTITY	266,055	298,930
			HAUL		
			From Mass Diagram	118,738	
			Estimate For Shoulder Areas	10,550	
			Estimate For Replacing Topsoil	14,757	
			TOTAL FOR PAY QUANTITY	144,045	
			ROADWAY QUANTITIES BALANCE (For Information Only)		
			Excavation	194,363	
			Borrow	87,804	
			TOTAL	282,167	
			EMBANKMENT NET		
			Roadway from Cross Sections	209,015	
			TOTAL	209,015	
			EMBANKMENT x FACTOR (Roadway - Electronic Computer)	282,167	
			TOTAL	282,167	

Ø NOTE: Approximately 17,020 Cu. Yds. of Unclassified Excavation: To be Obtained Within R.O.W. Rt. of Sta. 266± to 269± and 287± to 291±

DIVISION OF HIGHWAYS, STATE OF COLORADO
FORM NO. 126
MARCH, 1974

AS CONSTRUCTED — NO REVISIONS — REVISED 7-7-77 — VOID

FEDERAL ROAD REGION NO.	DIVISION	PROJ. NO.	SHEET NO.	TOTAL SHEETS
VIII	COLORADO	RF 034 -1(16)	7	

FINAL TABULATION OF DELINEATORS

STATION TO STATION	SIDE	SPACING	TYPE I EACH Plan	TYPE I EACH Final	TYPE II EACH Plan	TYPE II EACH Final
E.B. BUSINESS						
283+21 – 286+50	Rt.	2° Curve	2			
290+32 – 294+32	Lt.&Rt.	Tangent	4	37		
297+18 – 301+14	Lt.&Rt.	Tangent	4			
303+52 – 311+52	Lt&Rt.	5° Curve	14			
315+52 – 319+92	Lt&Rt.	Tangent	4			
320+80 – 324+25	Rt.	2° Curve	2			
325+87 – 329+87	Rt.	Tangent	2			
BUSINESS W.B.&E.B.				28		
325+60 – 332+60	Lt.	Acceleration Lane			7	13
327+80 – 332+80	Rt	Lt. Turn Lane	11			
332+86 – 334+20	Lt.	14° Curve			2	
226+97 – 271+02 (S.H.257)	Rt.	Deceleration Lane			4	11
333+	Rt.	Curve			4	
333+	Lt&Rt.	Islands	9	7		
333+80 – 340+80	Rt.	Acceleration Lane			8	
334+49 – 339+49	Lt.	Lt. Turn Lane	14			17
335+17 –	Lt.	Deceleration Lane		18	5	
348+ – 355+	Lt&Rt.	Crossover	8			
W.B. BUSINESS						
303+56 – 313+84	Lt&Rt.	2°45' Curve	12			
316+94 – 320+94	Lt.	Tangent	2	36		16
BY-PASS						
319+ – 328+ 312+	Lt&Rt.	Crossover	8	13		4
PROJECT TOTALS			96	139	30	61

FINAL FENCING REQUIREMENTS

STATION TO STATION	SIDE	REMOVE FENCE LINEAR FENCE Plan	REMOVE FENCE LINEAR FENCE Final	RESET FENCE LINEAR FOOT Plan	RESET FENCE LINEAR FOOT Final	BUILD FENCE BARBED WIRE LINEAR FOOT Plan	BUILD FENCE BARBED WIRE LINEAR FOOT Final	GATES ϕBARBED WIRE EACH Plan	GATES ϕBARBED WIRE EACH Final	GATES DRIVE EACH Plan	GATES DRIVE EACH Final
BY-PASS											
282+00 – 302+05	Rt.	2010	2016								
302+65 – 312+10	Rt.	950	939								
291+12 – 302+29	Lt			1120	1036						
E.B. BUSINESS											
282+00 – 312+00	Rt.					3100	3018				
BUSINESS W.B. & E.B.											
324+55 – 335+00	Lt					1100					
339+00 – 360+00	Lt.					2150					
360+00 – 366+	Lt.					600					
338+00 – 360+00	Rt.					2450					
360+00 – 367+	Rt					770					
365+80	Rt.									1	0
W.B. BUSINESS											
302+30 – 323+75	Lt.					2090	11,801				
S.H. 257											
259+00 – 261+12	Rt.	210	212								
281+46 – 284+70	Lt.	420	419								
259+00 – 268+70	Lt					980					
278+10 – 284+70	Lt.					1040					
259+00 – 266+90	Rt.					800					
261+18	Lt.							1	1		
261+27	Rt.							1	1		
PROJECT TOTALS		3590	3586	1120	1036	15080	14,819	2	2	1	0

Note: ~~It is Estimated That~~ ~~14~~ 24 End Posts and ~~22~~ 18 Corner and Line Brace Posts ~~will be~~ were Required.

ϕFor Information Only

AS CONSTRUCTED			FEDERAL ROAD REGION NO.	DIVISION	PROJ. NO.	SHEET NO.	TOTAL SHEETS
NO REVISIONS	REVISED 7-7-77	VOID	VIII	COLORADO	RF 034 - 1(16)	8	

FINAL BASE COURSE AND SURFACE COURSE PLAN

STATION TO STATION	SOURCE	QUANTITY - TONS: BASE COURSE, AGGR. BASE COURSE, CL. 6 Plan	Final	SURFACE COURSE - HOT BITUMINOUS PAVEMENT, BOTTOM LAYER, GRADING E Plan	Final	TOP LAYER, GRADING EX Plan	Final	HAUL - TON MILE: BASE COURSE, AGGR. BASE COURSE, CL. 6 Plan	Final
E.B. BUSINESS									
287+ to 311+46.4		2177		1150		856		13,407	
314+93.8 to 326+75.1 Bk.		1051		555		413		5539	
Decel Lane		225	5,498.45	120	1,741.00	90	1,717.85	1341	31,696
Accel Lane		200		110		82		1214	
W.B. BUSINESS									
309+00 to 323+75.4 Bk.		930		472		354		4867	
302+00 to 309+00		441		224		168	588.10	2275	
Accel Lane		171	1,245.90	80	1480.60	60		912	7,092
Transition		92		51				488	
BUSINESS W.B. & E.B.									
324+54.6 Ah to 333+60.3	UNDESIGNATED STROH PIT	1612		842		572		8176	
333+60.3 to 340+79.7		1281		669		478		6472	
340+79.7 to 348+00		1088		562		425		5646	
348+00 to 352+50 Lt.		400		209		142		2121	
352+50 to 355+40 Lt.	H.B.P. A.B.C.	91		46		35		489	
355+40 to 367+60.3		1147	11,410.95	598	4075.50	452	3,098.95	6347	58,268
Transition		80		44		33		420	
Crossover, Sta. 348+		231		117		88		1234	
From Structure Quantities		297		129				1533	
Intersection Sta. 333+ with Accel & Decel Lanes		1067		584		438		5320	
BY - PASS									
302+00 to 313+00		1958	2,338.45	1023	2,382.45	770	2,624.6	9991	13,697
Approach to Project		1902		973		730		9223	
PROJECT TOTALS		16,441	20,493.75	8558	9,679.55	6186	8,029.50	87,015	110,753

STABILIZATION BASED ON:

18k EDLA	=	67
Regional Factor	=	1.5
Serviceability Index	=	2.5

STRENGTH COEFFICIENTS:

H.B.P. (Rt = 100)	=	0.44
A.B.C. (Class 6)(R = 82)	=	0.12
A.B.C. (Class 1)(R = 78)	=	0.12

FINAL SUBBASE PLAN

STATION TO STATION	SOURCE	THICKNESS INCHES Plan	AGGREGATE BASE COURSE, CLASS 1, TONS Plan	Final	HAUL - TON MILE Plan	Final
BUSINESS (E.B.)						
287+00 to 294+00		12	2100		12,585	
294+00 to 311+46.4		9 12	3929		24,459	
314+93.8 to 323+00		9 12	1814	17,062.80	9559	101,406
323+00 to 326+75.1 Bk.		12	1125		5844	
Est. for Irregularities			897		5245	
BUSINESS (W.B.)						
302+00 to 309+00		12	1540		7945	
309+00 to 323+75.4 Bk.		12	3246		16,985	
Accel Lane		12	360	9,072.20	1955	51,320
Transition		12	277		1496	
Est. for Irregularities			542		2838	
BUSINESS W.B. & E.B.						
324+54.6 Ah. to 333+60.3	STROH PIT	12	5434		27,562	
333+60.3 to 340+79.7		12	6478		32,743	
340+79.7 to 348+00		9 12	3746		19,446	
348+00 to 352+50 Lt.		9 12	1013		5371	
352+50 to 355+40		9	345		1854	
355+40 to 367+60.3		12	3856	20,451.55	21265	105,018
Intersection, Sta. 333+ with Accel & Decel Lanes			3201		15961	
Transition			180		932	
Crossover Sta. 348+			590		3152	
Est. for Irregularities			2484		12,829	
BY - PASS						
302+00 to 313+00		12	6600		33,676	
Approach to Project			6453	12,217.81	31292	72,032
Est. for Irregularities			1305		6497	
PROJECT TOTALS			57,515	58,804.36	301,491	329,776

ION OF HIGHWAYS, STATE OF COLORADO
H. FORM NO. 126
MARCH, 1974

AS CONSTRUCTED	FEDERAL ROAD REGION NO.	DIVISION	PROJ. NO.	SHEET NO.	TOTAL SHEETS
NO REVISIONS [ ] REVISED [7-7-77] VOID [ ]	VIII	COLORADO	RF 034 - 1(16)	9	

STROH PIT

NOT USED - CMO 3230

LOCATION: A portion of S.W. 1/4, and W. 1/2, N.W. 1/4, S.E. 1/4, Sec. 2, T. 4 N., R. 67 W.

OWNER: Elmer Stroh and Helen D. Stroh

QUANTITY AVAILABLE: 70,000 Cu. Yd.

PROPOSED USE: Aggregate Base Course Class 6, Subase Class 1

HAUL DISTANCE: 4.7 Mi. to Sta. 328+75.1

OVERBURDEN: 17,500 Cu. Yd.

STRIPPING: 3500 Cu. Yd. Remove
3500 Cu. Yd. Replace

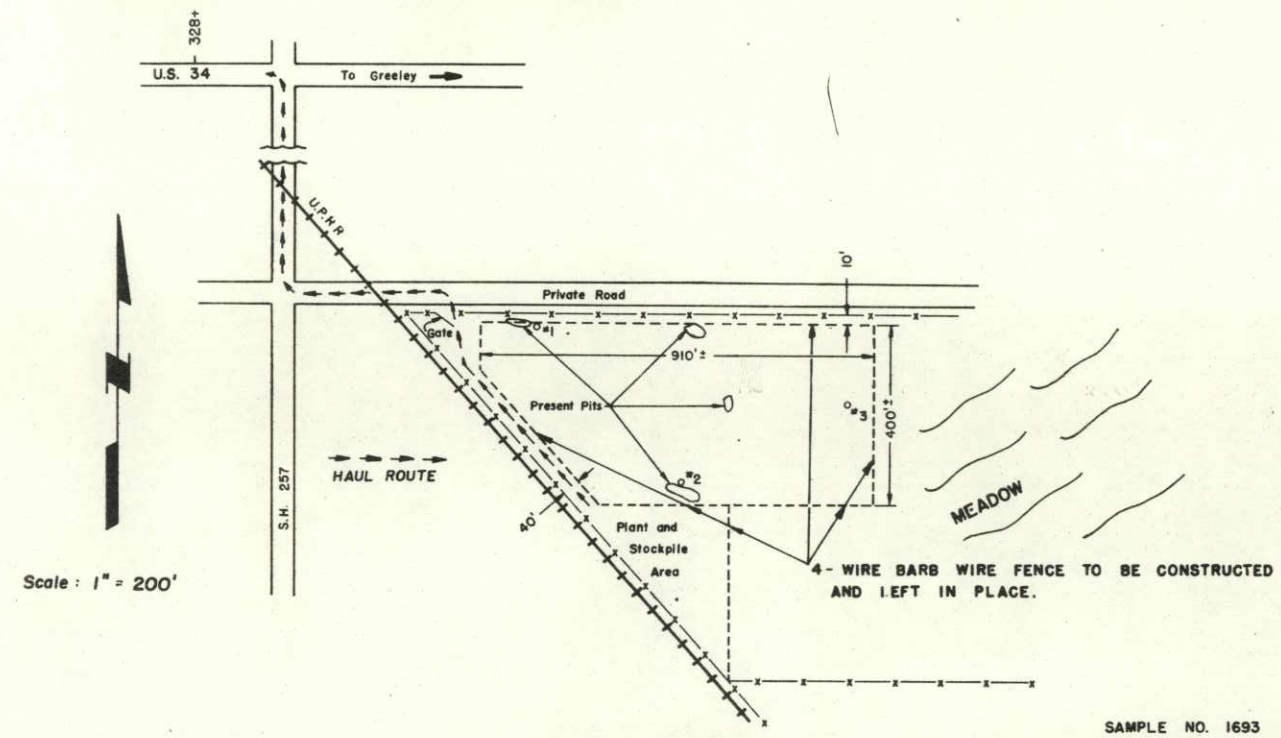

Scale: 1" = 200'

SAMPLE NO. 1693
DATE: NOVEMBER 19, 1973
WATER TABLE: AVERAGE

OVERBURDEN

SAND & GRAVEL

CLAY

SOD

WATER

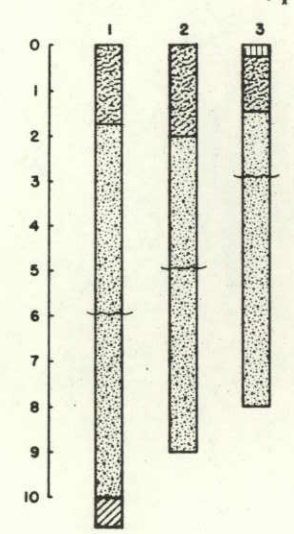

NOTE:

CONTRACTOR WILL BE PROHIBITED FROM WORKING THE PIT BETWEEN THE HOURS OF 10 P.M. AND 6 A.M.

NOTE:

The Contractor's Attention Is Directed To The Fact That Some Areas Of This Pit Contain Plastic Fine Sand And Filler. These Areas Of Plastic Material Should Be Avoided During The Production Of Aggregate Base Course - Class 6.

N OF HIGHWAYS, STATE OF COLORADO
FORM NO. 126
ARCH, 1974

AS CONSTRUCTED	FEDERAL ROAD REGION NO.	DIVISION	PROJ. NO.	SHEET NO.	TOTAL SHEETS
NO REVISIONS ☐ REVISED 7-7-77 VOID ☐	VIII	COLORADO	RF 034-1(16)	10	

LEONARD PIT

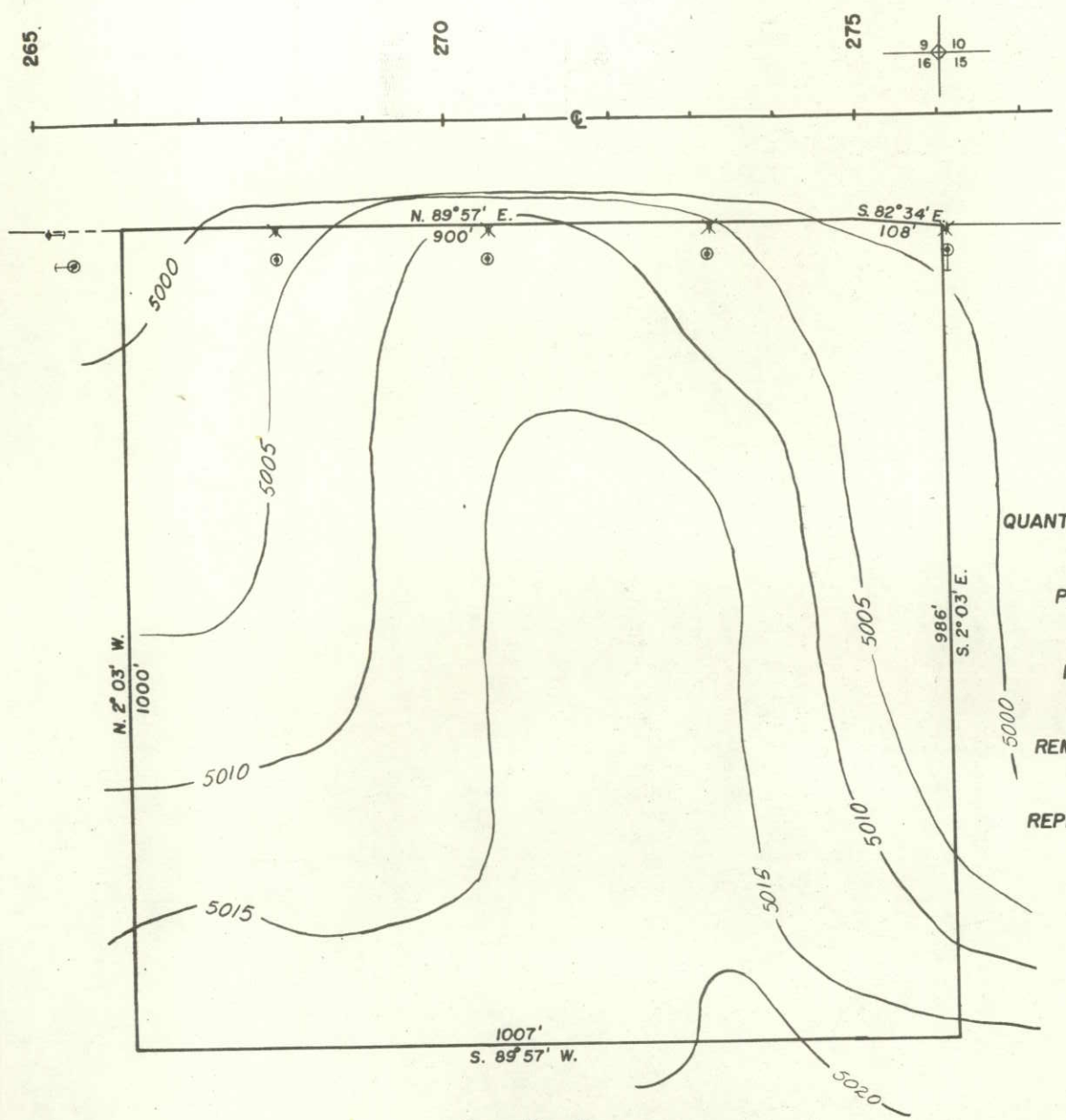

Area No. 2

LOCATION:	Area No. 1, N.W. 1/4, Sec. 15, T. 5 N., R. 67 W. Area No. 2, N.E. 1/4, Sec. 16, T. 5 N., R. 67 W.
OWNERS:	DONALD E. & OLIVE M. LEONARD, CARL LEONARD
QUANTITY AVAILABLE:	Area No. 1, 81,000 Cu. Yd. Area No. 2, 249,000 Cu. Yd.
PROPOSED USE:	BORROW
HAUL DISTANCE:	Area No. 1, 700' to Sta. 293+00 Area No. 2, 900' to Sta. 276+00
REMOVE TOPSOIL:	Area No. 1, 10,100 Cu. Yd. Area No. 2, 10,000 Cu. Yd.
REPLACE TOPSOIL:	Area No. 1, 10,100 Cu. Yd. Area No. 2, 10,000 Cu. Yd.

SAMPLE NO. 1690
DATE: SEPTEMBER 12, 1975
80' TO WATER

Note:
Area No. 1 is to be used first.

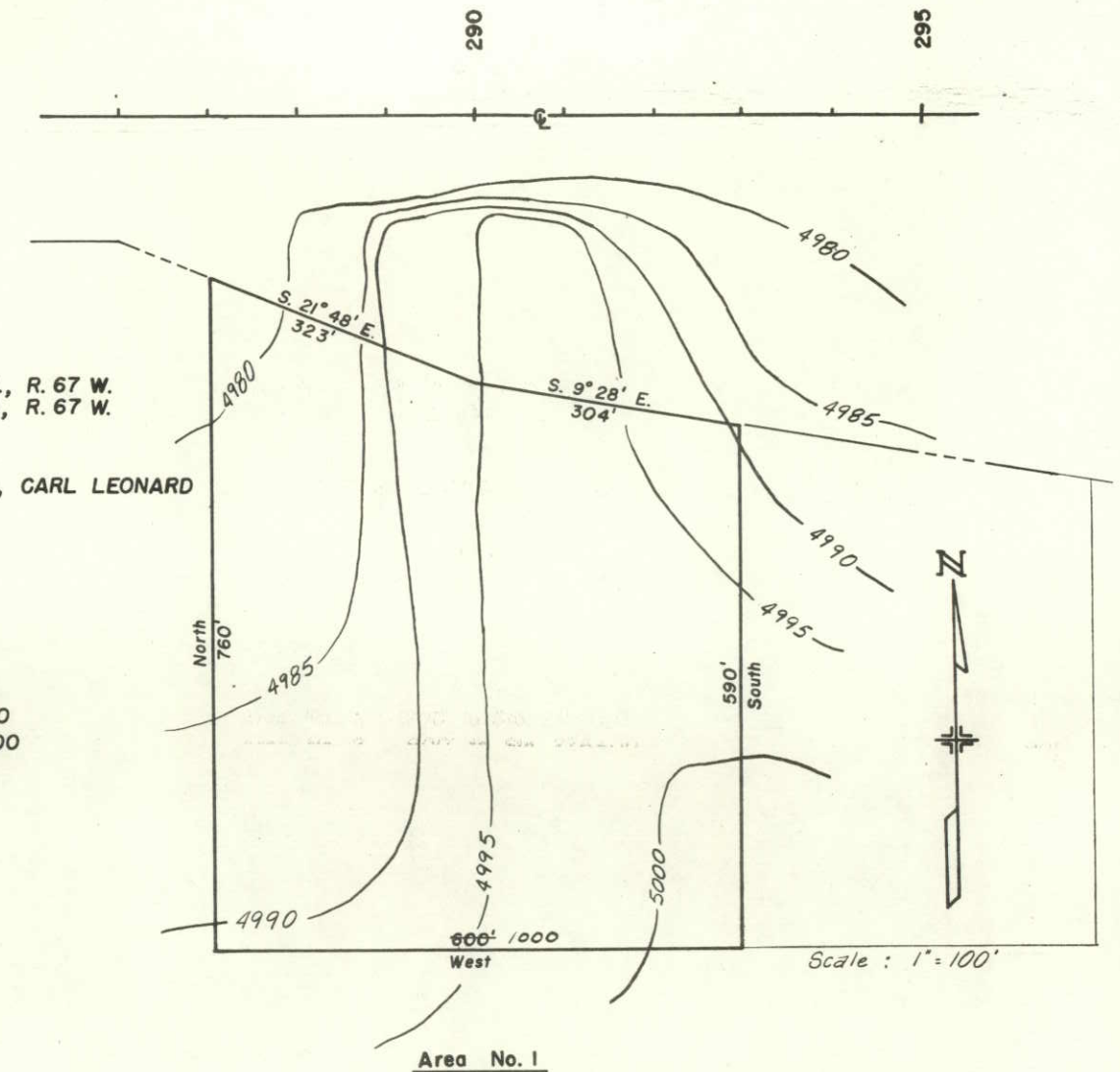

Area No. 1

THE STATE DEPARTMENT OF HIGHWAYS
DIVISION OF HIGHWAYS—STATE OF COLORADO
DOH FORM NO. 125 (MYLAR)
REV. MARCH, 1975

FINAL STRUCTURE QUANTITIES

AS CONSTRUCTED — NO REVISIONS ☐ REVISED 7-7-77 VOID ☐

FEDERAL ROAD REGION NO.	DIVISION	PROJECT NO.	SHEET NO.
8	COLORADO	RF 034 - 1 (16)	11

INDEX BOOK	INDEX PAGE	INDEX SHEET	LOCATION	UNCLASSIFIED EXCAVATION CUBIC YARD EXCAV.	UNCLASSIFIED EXCAVATION CUBIC YARD EMB.	UNCLASSIFIED EXCAVATION CUBIC YARD DITCH	STRUCTURE EXCAVATION CUBIC YARD	STRUCTURE BACKFILL CUBIC YARD CL. 2	REMOVAL OF STRUCTURE EACH	AGGREGATE BASE COURSE SURFACING (CLASS 6) TON	HOT BITUMINOUS PAVEMENT (GRADING E) TON	INLET TYPE C EACH 5 FT.	INLET TYPE C EACH 15 FT.	REINFORCED CONCRETE PIPE LINEAR FEET 24"	REINFORCED CONCRETE PIPE LINEAR FEET 36"	"H" OVER CULV. FT.	CONCRETE SLOPE & DITCH PAVING REINFORCED CUBIC YARD	REINFORCED CONCRETE END SECTION EACH 24"	REINFORCED CONCRETE END SECTION EACH 36"	MISCELLANEOUS
			BY-PASS																	
Form	266	*55	298+				0.4	3							8					
5	52		302+	~~150~~																
5	55		302+40						1											
5	58		302+50						1											
6	7		308+05						1											
6	10		309+00	~~250~~	ϕ~~250~~					~~223~~	~~H0~~									
6	13		313+00 to 328+30	ϕ						△	△									
			EASTBOUND BUSINESS ROUTE	INCLUDED IN ROADWAY CROSS SECTIONS	INCLUDED IN ROADWAY CROSS SECTIONS					INCLUDED IN ROADWAY QUANT.	INCLUDED IN ROADWAY QUANT.									
5	7		300+68				54 ~~44~~	105 ~~97~~							200 ~~182~~	10			2	
5	9		310+19 to 311+75																	180 Lin. Ft. of Guard Rail Type 5; 2 - End Anchorage Type 5A
			311+46B to 314+93.5							(QUANTITIES IN SUMMARY)										
5	11		314+90 To 315+23																	2 - End Anchorage Type 5A
			WESTBOUND BUSINESS ROUTE																	
5	15		306 ~~308~~+00			~~15~~	128 ~~37~~	55 ~~21~~						108 ~~50~~		3		2		
5	17		310+40						1											

△ Included In Surfacing Plan

ϕ Included in Profile Quantities

THE STATE DEPARTMENT OF HIGHWAYS
DIVISION OF HIGHWAYS–STATE OF COLORADO
DOH FORM NO. 125 (MYLAR)
REV. MARCH, 1975

FINAL STRUCTURE QUANTITIES

AS CONSTRUCTED			
NO REVISIONS		REVISED 7-7-77	VOID

FEDERAL ROAD REGION NO.	DIVISION	PROJECT NO.	SHEET NO.
9	COLORADO	RF 034-1(16)	12

(R-1) 4-14-76, C.K.M. ADDED ROAD APPR.

INDEX BOOK	INDEX PAGE	INDEX SHEET	LOCATION	UNCLASSIFIED EXCAVATION CUBIC YARD EXCAV.	UNCLASSIFIED EXCAVATION CUBIC YARD EMB.	UNCLASSIFIED EXCAVATION CUBIC YARD DITCH	STRUCTURE EXCAVATION CUBIC YARD	STRUCTURE BACKFILL CUBIC YARD CL. 2	REMOVAL OF STRUCTURE EACH	AGGREGATE BASE COURSE SURFACING (CLASS 6) TON	HOT BITUMINOUS PAVEMENT (GRADING E) TON	INLET TYPE C EACH 5 FT.	INLET TYPE C EACH 15 FT.	REINFORCED CONCRETE PIPE LINEAR FEET 24"	REINFORCED CONCRETE PIPE LINEAR FEET 36"	"H" OVER CULV. FT.	CONCRETE SLOPE & DITCH PAVING REINFORCED CUBIC YARD	REINFORCED CONCRETE END SECTION EACH 24"	REINFORCED CONCRETE END SECTION EACH 36"	MISCELLANEOUS
			E.B & W.B. BUSINESS ROUTE																	
5	21		332+50	Included in Roadway Sections		15	55 ~~57~~	29 ~~31~~				1'•		78 ~~84~~		3	1.1'	1'		
5	24		333+		~~550~~					△	△									
5	26		333+ Lt.																	
5	31		348+		~~150~~					△	△									440 ~~460~~ Lin. Ft. Curb Type 6 (Section M)
5	34		350+00				54 ~~56~~	73.5 ~~77~~					1'°	102 ~~110~~ 108		12	1.1'	2'		
5	37		361+50				16 ~~12~~	37 ~~27~~						96 ~~70~~				2'		
(R-1) 5	40		365+80		33 ~~30~~					~~31~~	~~4~~									
5	43		367+03		33 ~~30~~					~~32~~	~~5~~									
(R-1) 5	46		297+ (S.H. 257)		~~10~~					~~11~~	~~2~~									
5	48		Entire Project							Included in Roadway Quantities	Included in Roadway Quantities									1 - Reset Mailbox Structure
			PROJECT TOTALS	~~400~~'	66 ~~770~~	30	307.4 ~~213~~	302.5 ~~253~~	4	~~297~~	~~129~~	1'	1'	492 ~~422~~	208 ~~182~~		2.2'	7'	2'	

△ Included In Surfacing Plan • Actual "H" = 3'-6" ° Actual "H" = 12'-0"

AS CONSTRUCTED
NO REVISIONS 7-7-77

~~STANDARD M-604-BA~~

(JUNE 1, 1967)

(SPECIAL FOR THIS PROJECT ONLY)

FEDERAL ROAD REGION NO.	DIVISION	PROJ. NO	SHEET NO.	TOTAL SHEETS
VIII	COLORADO	RF 034 - 1(16)	13	

REVISIONS

R-1	9-13-67	Grate Detail & Quants.	M.R.H.
R-2	12-18-67	Connect to skewed culvert, General Note	M.R.H.
R-3	7-19-68	Note 8 Dept. Name	M.R.H.
R-4	4-15-71	Conc. in G.Note and table. Re-do grate welds.	M.R.H.
R-5	5-24-71	Lower fastener bolt so top is flush w. conc.	M.R.H.
R-6	4-3-74	"H" to flow line & in table. WWF in Gen'l. N.	M.R.H.
R-7	11-19-74	Grate Install. Dimensions. Quantities.	M.R.H.
R-8	7-3-75	Added alt. WWF.	M.R.H.

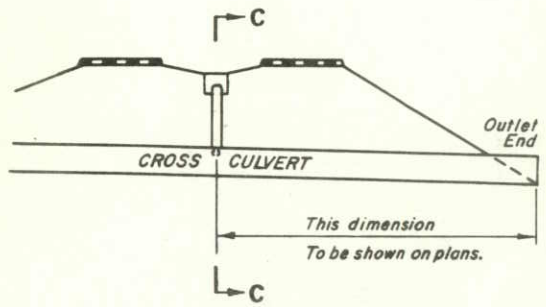

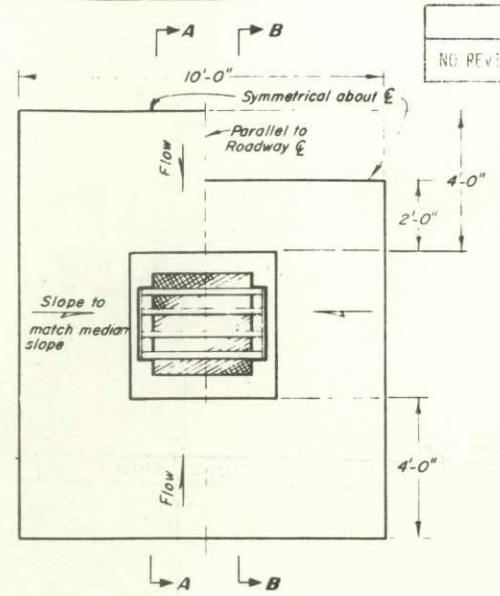

LAYOUT OF INLET IN MEDIAN DITCH (R-7)

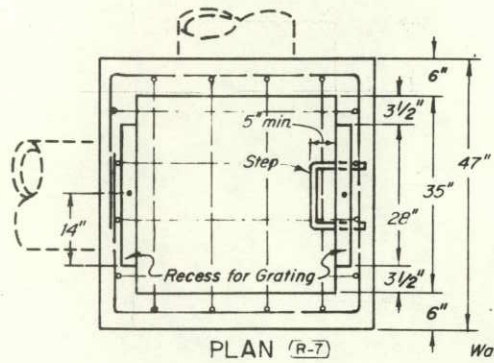

PLAN (R-7)

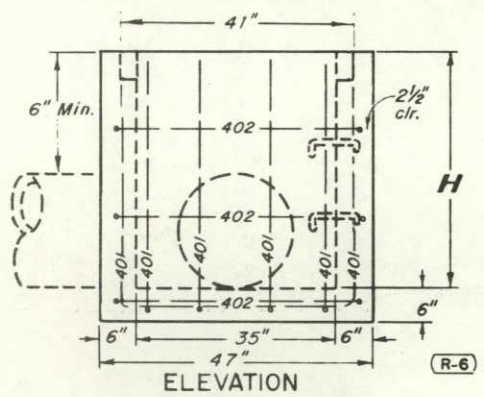

ELEVATION (R-6)

CONCRETE INLET (R-7)

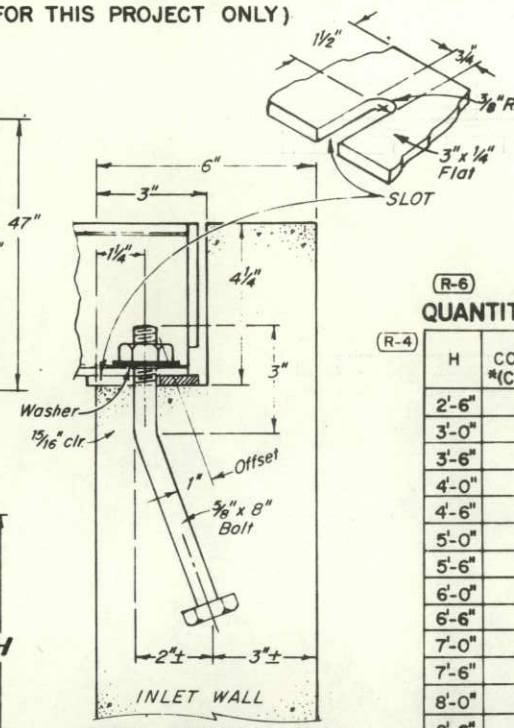

GRATE INSTALLATION DETAIL (R-7)

(R-6) (R-7)

QUANTITIES FOR ONE INLET

(R-4)

H	CONCRETE *(CU. YDS.)	REINF. STEEL (LBS.)	NO. STEPS REQ'D.
2'-6"	0.9	75	0
3'-0"	1.0	80	0
3'-6"	1.2	96	0
4'-0"	1.3	101	1
4'-6"	1.4	116	2
5'-0"	1.5	122	2
5'-6"	1.7	137	2
6'-0"	1.8	142	3
6'-6"	1.9	158	3
7'-0"	2.0	163	3
7'-6"	2.2	179	4
8'-0"	2.3	184	4
8'-6"	2.4	199	4
9'-0"	2.5	205	5
9'-6"	2.7	220	5
10'-6"	3.0	235	6
12'-0"	3.4	267	7

* Note: Includes Volume occupied by pipes. (R-3)

(R-7)

BAR LIST FOR H=2'-6" AND BENDING DIAGRAM

MARK	NO. REQ'D	HGT. "U"	LENGTH
401	2	2'-3"	7'-11"
401	6	2'-7"	8'-7"
402	3		15'-0"

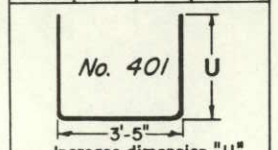

Increase dimension "U" 6" for each 6" increase of H above 2'-6".

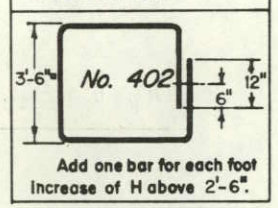

Add one bar for each foot increase of H above 2'-6".

All bars to be ½" Dia.—Cut or bend around pipes as required.

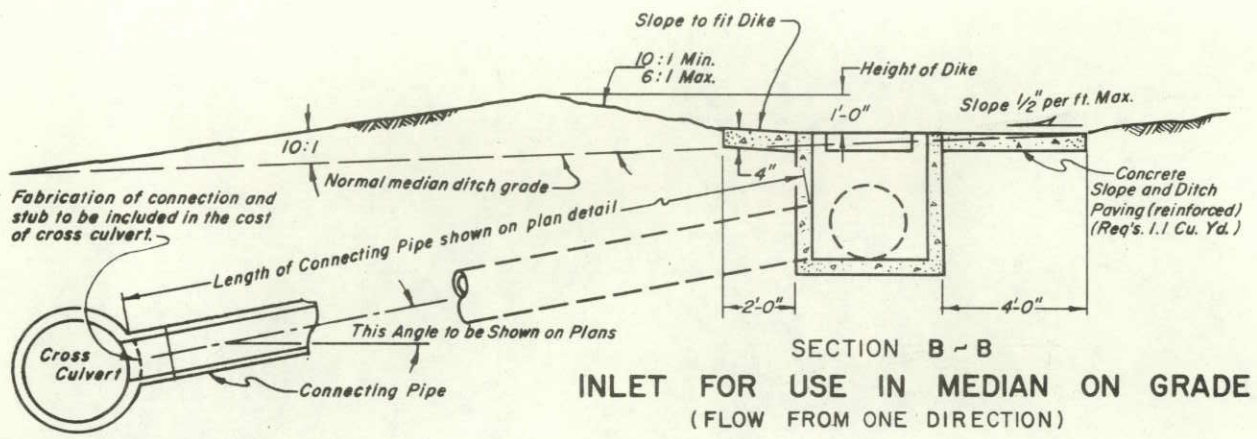

SECTION B-B

INLET FOR USE IN MEDIAN ON GRADE
(FLOW FROM ONE DIRECTION)

SECTION C-C

DETAIL SHOWING MEDIAN INLET CONNECTED TO A CROSS CULVERT

(R-8)

GENERAL NOTES

All work shall be done in accordance with the Standard Specifications applicable to the project.

All concrete shall be Class A, B or D.

For detail of Inlet Step, see M-Standard "Steps for Manholes and Inlets".

All reinforcing bars shall be deformed, of intermediate grade, and shall be tagged with the station number and bar designation.

All edge distances not marked "clear" are to ℄ of bar.

Concrete slope and ditch paving shall conform to Section 507. Reinforcement for concrete slope paving shall be WWF 4 x 4 -W1.4 x W1.4 or WWF 6x6 -W2.1 x W2.1.

Grating shall conform to Section 604.

Inlet grating shall be galvanized as described for Frames, Grates, Covers and Steps in Section 712.

Steps or ladder will be required when Inlet "H" exceeds 3'-6".

(R-7)

STEEL GRATE QUANTITIES

NO. PIECES	DESCRIPTION	LENGTH	Lb. per ft.	WEIGHT (lbs.)
4	S4 x 7.7 Beam	40"	7.70	103
2	3½" x ¼" Flat	26⅝"	2.98	13
2	3" x ¼" Flat	26⅝"	2.55	12
			TOTAL	128 lbs.

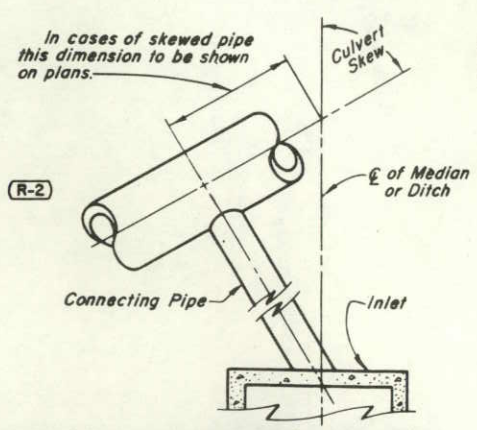

DETAIL SHOWING MEDIAN INLET CONNECTED TO A SKEWED CROSS CULVERT

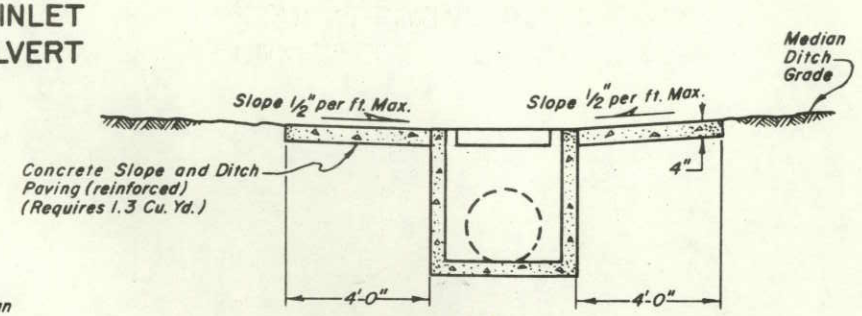

SECTION A-A

INLET FOR USE IN MEDIAN AT BOTTOM OF VERTICAL CURVE

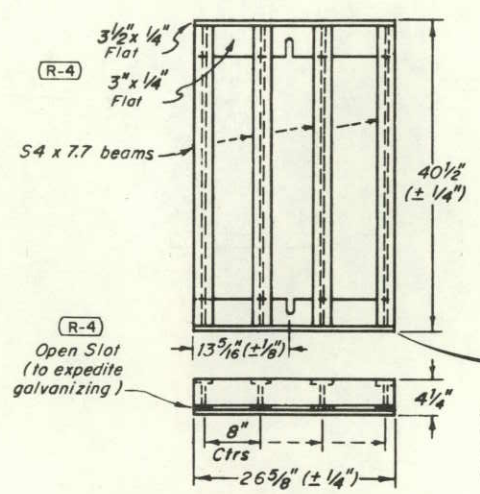

DETAIL OF GRATING (R-7)

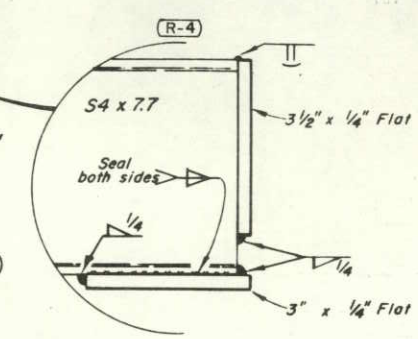

(R-3)

DEPARTMENT OF HIGHWAYS
STATE OF COLORADO
DIVISION OF HIGHWAYS

INLET, TYPE C

Designed by	D. B. R.	Approved by	J. E. Olsen
Made by	J. R. B.	Staff Design Engineer	
Checked by	R. S. M.	Date:	JUNE 1, 1967

ORIGINAL

DEPARTMENT OF HIGHWAYS, STATE OF COLORADO
STANDARD FORM NO. 136
MARCH, 1974

AS CONSTRUCTED			
NO REVISIONS		REVISED 7-7-77	VOID

FEDERAL ROAD REGION NO.	DIVISION	PROJ. NO.	SHEET NO.	TOTAL SHEETS
VIII	COLORADO	RF 034-1 (16)	14	

DETAILS OF INTERCHANGE ◇ STA. 308+

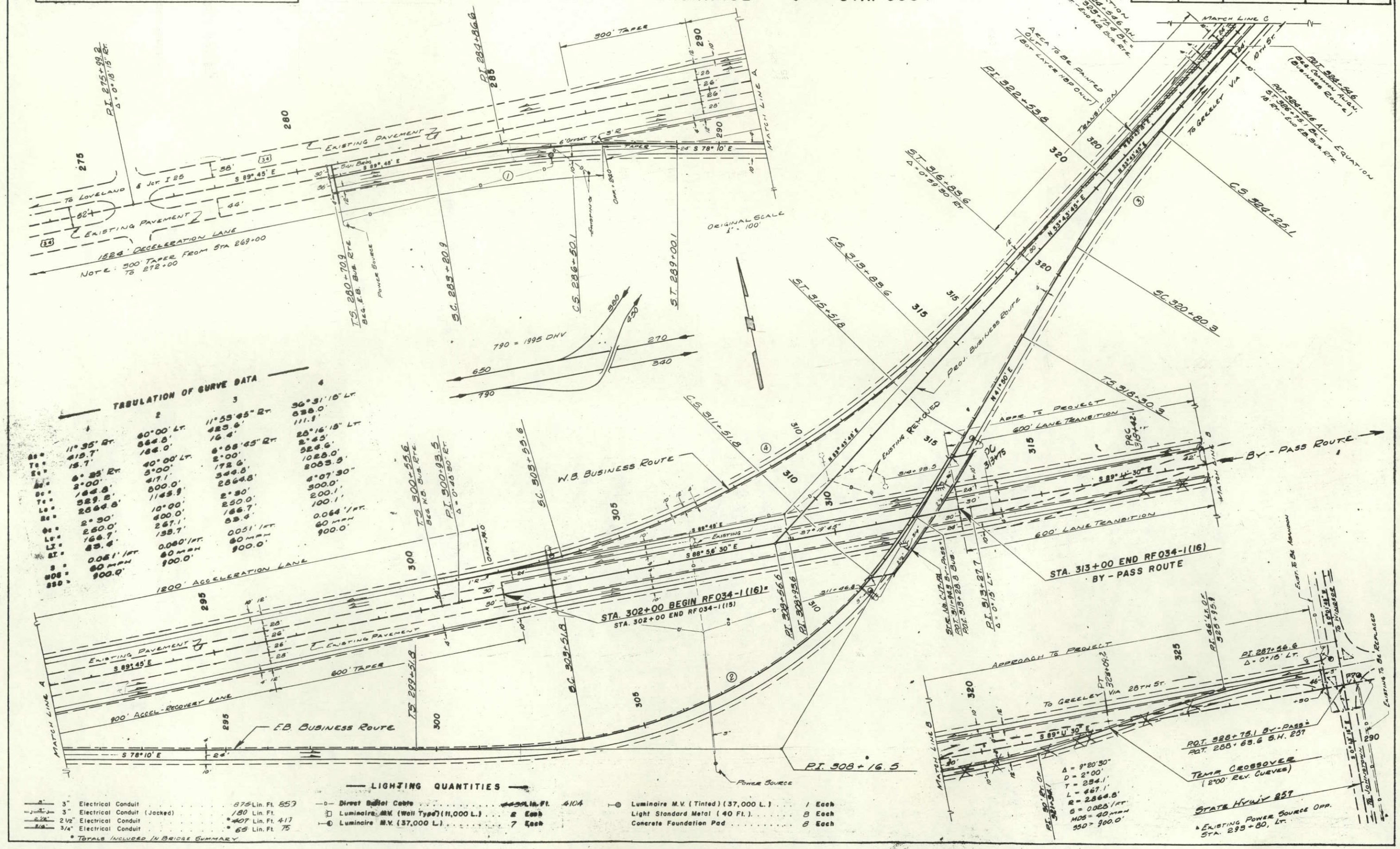

N OF HIGHWAYS, STATE OF COLORADO
FORM NO. 126
ARCH, 1974

AS CONSTRUCTED			
NO REVISIONS		REVISED 7-7-77	VOID

DETAILS OF INTERSECTION ◇ STA. 333+

FEDERAL ROAD REGION NO.	DIVISION	PROJ. NO.	SHEET NO.	TOTAL SHEETS
VIII	COLORADO	RF 034-1 (16)	15	

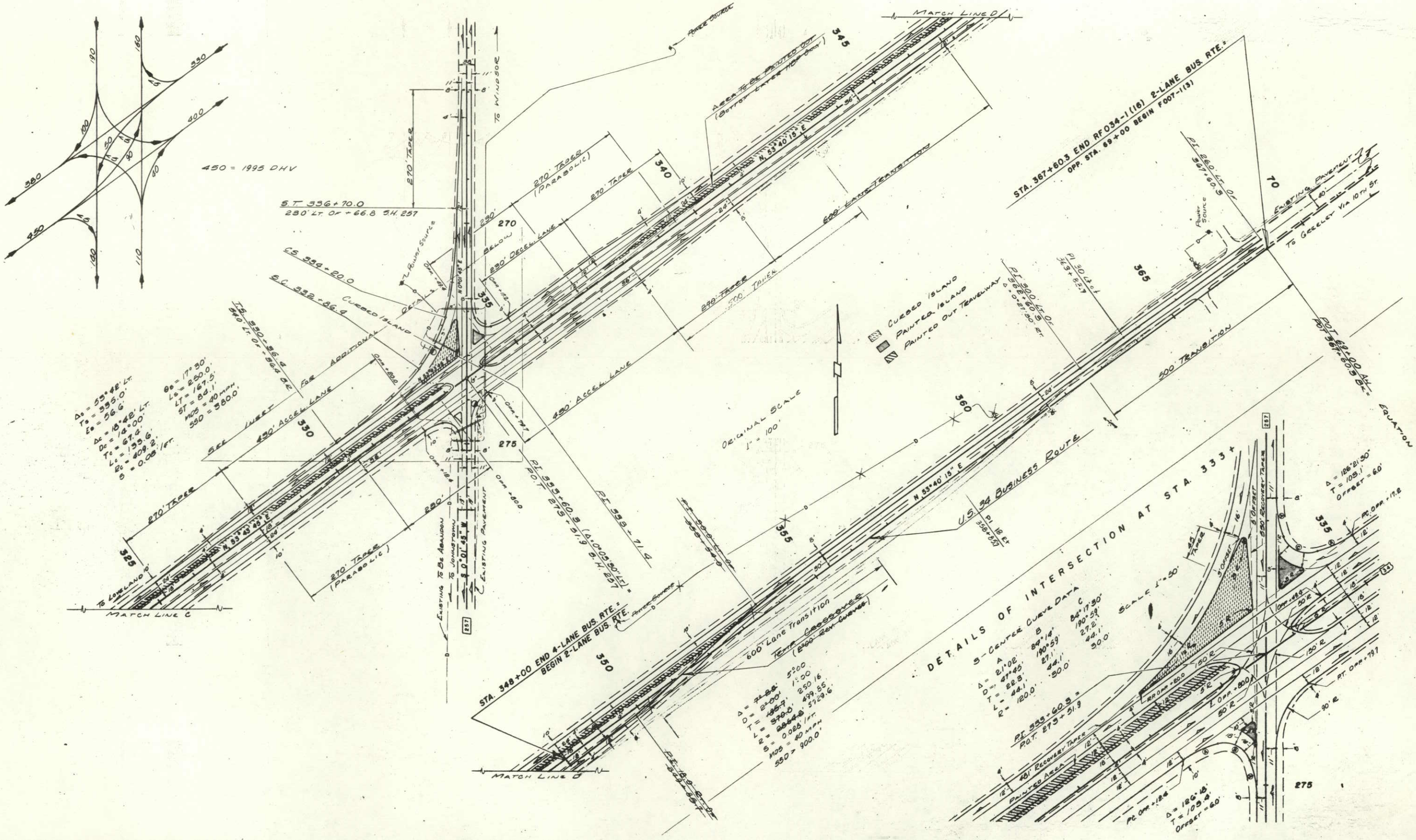

STATE DEPARTMENT OF HIGHWAYS
DIVISION OF HIGHWAYS—STATE OF COLORADO
DOH FORM NO 117
REV. DEC. 1972

BRIDGE STANDARD -0-

AS CONSTRUCTED
NO REVISIONS ☐ REVISED 7-7-77 VOID ☐

FEDERAL ROAD REGION NO.	DIVISION	PROJ. NO.	SHEET NO.	TOTAL SHEETS
VIII	COLORADO	RF 034-1(16)	16	

REVISIONS

GENERAL NOTES

ALL WORK SHALL BE DONE ACCORDING TO THE STANDARD SPECIFICATIONS OF THE DIVISION OF HIGHWAYS, STATE OF COLORADO, APPLICABLE TO THE PROJECT.

ALL CONCRETE SURFACES MARKED WITH THE SYMBOL f AS SHOWN ON DRAWING NO. B-8,9,10,11 SHALL RECEIVE A CLASS 5 SURFACE FINISH.

ALL CONCRETE CHAMFERS SHALL BE 3/4 INCH UNLESS OTHERWISE NOTED.

EXPANSION JOINT MATERIAL SHALL MEET A.A.S.H.T.O. SPECIFICATION M-213-65. IT SHALL NOT BE PAID FOR SEPARATELY BUT WILL BE INCLUDED IN THE WORK.

SOUNDINGS AND DEPTH OF FOOTINGS ARE IN ACCORDANCE WITH THE BEST AVAILABLE DATA. WHEN DIFFERENT CONDITIONS ARE ENCOUNTERED, THE BRIDGE ENGINEER WILL INSPECT AND DETERMINE IF REDESIGN IS NECESSARY.

WHEN EXCAVATING FOR FOOTINGS, THE FINAL SIX INCHES IN DEPTH SHALL BE DONE BY HAND LABOR METHODS.

FOOTINGS IN ROCK SHALL NOT BE FORMED BUT SHALL BE PLACED AGAINST UNDISTURBED ROCK.

FOR DETAILS OF STRUCTURE EXCAVATION AND STRUCTURE BACKFILL, SEE STANDARD M-206-AA.

ALL STRUCTURAL STEEL NOT OTHERWISE NOTED SHALL BE A.A.S.H.T.O. SPECIFICATION M-183(ASTM A-36)

ALL STRUCTURAL STEEL NOT OTHERWISE NOTED SHALL BE PAINTED IN ACCORDANCE WITH SECTION 509 FOR (_____) PAINT.

ALL BOLTS SHALL BE 3/4" DIAMETER, HIGH STRENGTH, UNLESS OTHERWISE NOTED.

NO WELDING OF ANY KIND SHALL BE PERMITTED ON THE FLANGES OF STEEL GIRDERS UNLESS SPECIFICALLY CALLED FOR ON THE PLANS.

THE FOLLOWING TABLE SHOWS THE MINIMUM LAP FOR COMMON BAR SIZES.

BAR SIZE NUMBER	4	5	6	7	8	9	10	11
SPLICE LENGTH	1'-0"	1'-2"	1'-8"	2'-3"	3'-0"	3'-10"	4'-10"	6'-0"

GRADE 60 REINFORCING STEEL REQUIRED FOR #5 BARS AND LARGER

GRADE 40 OR GRADE 60 MAY BE FURNISHED FOR #4 BARS.

E. F. = EACH FACE
N. F. = NEAR FACE
F. F. = FAR FACE

CROSS REFERENCE DRAWING NUMBER
SECTION OR DETAIL IDENTIFICATION

LOCATION OF CONSTRUCTION JOINTS SHALL BE APPROVED BY THE ENGINEER.

EMBANKMENT MUST BE IN PLACE BEFORE STRUCTURAL EXCAVATION IS MADE.

	INITIAL	DATE	CHECKED BY	DATE
DESIGNED BY	NLM	12-75	EHH	2-76
CHECKED BY	RRA	1-76	KDH	2-76
DETAILED BY	AIT	1-76	ATT	2-76
			KDH	2-76

FINAL SUMMARY OF QUANTITIES

	DESCRIPTION	UNIT	STRUCTURE No. C-17-FA SUPER-STRUCTURE	ABUT. 1	PIER 2	ABUT 3	TOTAL	4 RETAINING WALLS	TOTAL	Ref.
				~~87~~	193	~~63~~	~~343~~	1670	~~510~~ 343	305
206	STRUCTURE EXCAVATION	CU.YD.								
206	STRUCTURE BACKFILL (CLASS 2)	CU.YD.		123	104	95	322	133	455	305
403	HOT BITUMINOUS PAVEMENT (GRADING EX)	TON	~~175~~ 195				~~179~~ 195		~~179~~ 195	305-Form 87
502	STEEL PILLING (HP 10X42)	LIN.FT.		~~451.3~~ 464		~~337.5~~ 356	820		~~820~~	Bk 2 Pg 12-13
502	STEEL PILE CUTOFF			15.9			15.9		15.9	Bk 2. Pg 12-13
502	DRILLING HOLE TO FACILITATE PILE DRIVING	LIN.FT.		320		280	600		600	305
507	CONCRETE SLOPE & DITCH PAVING (REINF.)(COLORED)	CU.YD.		~~98.86~~ 120.3		~~88.84~~ 89.7	~~181.70~~ 210		~~181.70~~ 210	305
509	STRUCTURAL STEEL (GALVANIZED)	Lb.	26596				26596		26596	305
515	WATERPROOFING (MEMBRANE)	SQ.YD.	1635				1635		1635	305
518	BRIDGE COMPRESSION JOINT SEALER	LIN.FT.						24	24	305
601	CONCRETE CLASS A (BRIDGE)	CU.YD.		29.8	136.6	17.6	184		184	305
601	CONCRETE CLASS A (WALL)							28	28	305
601	CONCRETE CLASS S (BRIDGE)	CU.YD.	1193.1	62.0		54.9	1310		1310	305
602	REINFORCING STEEL	Lb.	198,507	9095	27028	7544	242,174	3056	245,230	305
613	2½ INCH ELECTRICAL CONDUIT	LIN.FT.	~~407~~417				~~407~~417		~~407~~417	305
613	¾ INCH ELECTRICAL CONDUIT	LIN.FT.	~~65~~ 75				~~65~~ 75		~~65~~ 75	305
(1) 618	PRESTRESSING STEEL WIRE OR STRAND	Lb.	78026				78026		78026	305
626	MOBILIZATION	LS								

(1) THIS ITEM INCLUDES FURNISHING, PLACING IN THE CONCRETE, AND POST-TENSIONING THE PRESTRESSING STEEL. THE CONTRACTOR SHALL FURNISH ALL STRESSING EQUIPMENT AND ACCESSORIES REQUIRED FOR INSTALLATION AND STRESSING OPERATIONS. WEIGHT SHALL NOT BE REMEASURED, BUT SHALL BE THE QUANTITY SHOWN.

INDEX OF DRAWINGS

DWG. NO. B 1 GENERAL INFORMATION -SUMMARY OF QUANTITIES
DWG. NO. B 2 GENERAL LAYOUT
DWG. NO. B 3 ENGINEERING GEOLOGY
DWG. NO. B 4 ELEVATIONS
DWG. NO. B 5 ELEVATIONS
DWG. NO. B 6 CONSTRUCTION LAYOUT
DWG. NO. B 7 PILING AND FOOTING LAYOUT
DWG. NO. B 8 ABUTMENT DETAILS
DWG. NO. B 9 ABUTMENT DETAILS -WINGS AND RETAINING WALLS
DWG. NO. B 10 PIER 2 DETAILS
DWG. NO. B 11 SUPERSTRUCTURE DETAILS
DWG. NO. B 12 SUPERSTRUCTURE DETAILS
DWG. NO. B 13 SUPERSTRUCTURE DETAILS
DWG. NO. B 14 CAST IN PLACE PRESTRESSD GIRDER DETAILS
DWG. NO. B 15 BOX GIRDER DETAILS
DWG. NO. B 16 BRIDGE RAIL TYPE 5
DWG. NO. B 17 SLOPE PAVING DETAILS
DWG. NO. B 18 STRUCTURE NUMBER STANDARD

BRIDGE DESCRIPTION

OVER U.S. 34 (BYPASS)
2 SPANS (180'-0", 163'-0")
POST-TENSIONED CONCRETE BOX GIRDER BRIDGE
29°13' 30" SKEW
42'-0" ROADWAY CURB TO CURB
1'-3" CURBS, BRIDGE RAIL TYPE 5

LOADING DATA

LIVELOAD: A.A.S.H.T.O. HS-20-44 OR INTERSTATE ALTERNATE
DEADLOAD: ASSUMES 25 LBS. PER SQ. FT. FOR BITUMINOUS PAVEMENT

DESIGN DATA

A.A.S.H.T.O. 1973 UNIT STRESSES, EXCEPT AS NOTED

REINFORCED CONCRETE: #5 BARS & LARGER, f_s = 24,000 PSI
EXCEPT f_s = 20,000 PSI IN TRANSVERSE DECK SLAB.
#4 BARS f_s = 20,000 PSI
f_c = 1,200 PSI n = 10

STRUCTURAL STEEL: A.A.S.H.T.O. M183(ASTM A-36) f_s = 20,000 PSI
A.A.S.H.T.O. M223(ASTM A-572) f_s = 27,000 PSI

PAUL CHUVARSKY JR. REGISTERED 4687 PROFESSIONAL ENGINEER STATE OF COLORADO

Approved P. Chuvarsky P.E.
Bridge Engineer Date 3/5/76

DIVISION OF HIGHWAYS

GENERAL INFORMATION
SUMMARY OF QUANTITIES

Station 311+46.805 To 314+93.446
Station
Near GREELEY Sec. 10, 15 T. 5 N R. 67 W
Designer M. McMULLEN | Structure Numbers C-17-FA
Detailer A. TAKIGIKU
Drawing Number B 1 of 18 Drawings

(11-1-74)

Revision Dates (Preliminary Stage Only)

-0-

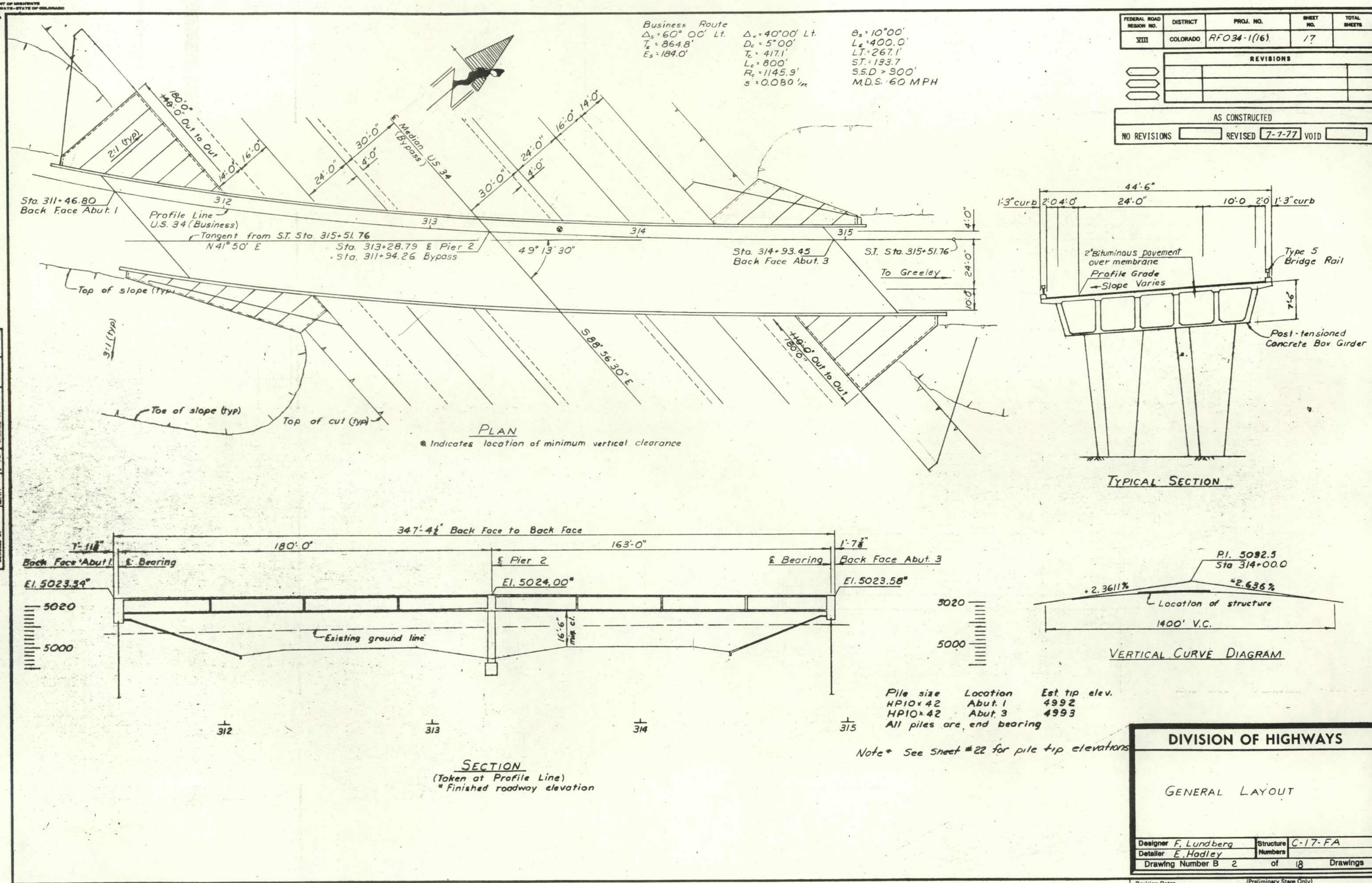
State Department of Highways
Division of Highways – State of Colorado
Federal Road Region No. VIII
District Colorado
Proj. No. RF034-1(16)
Sheet No. 17
Total Sheets
Revisions
As Constructed
No Revisions
Revised 7-7-77
Void
Business Route
Δs = 60° 00' Lt.
Ts = 864.8'
Es = 184.0'
Δc = 40°00' Lt.
Dc = 5°00'
Tc = 417.1'
Lc = 800'
Rc = 1145.9'
s = 0.080 '/ft
θs = 10°00'
Ls = 400.0'
L.T. = 267.1'
S.T. = 133.7
S.S.D > 900'
M.D.S. 60 MPH
180'0"
140'0" Out to Out
2:1 (typ)
14'0"
16'0"
24'0"
30'0"
4'0"
℄ Median US 34 (Bypass)
16'0"
14'0"
Sta. 311+46.80
Back Face Abut. 1
312
Profile Line
U.S. 34 (Business)
Tangent from S.T. Sta. 315+51.76
N41°50' E
313
Sta. 313+28.79 ℄ Pier 2
Sta. 311+94.26 Bypass
49° 13' 30"
314
Sta. 314+93.45
Back Face Abut. 3
315
S.T. Sta. 315+51.76
To Greeley
10'0
Top of slope (typ)
3:1 (typ)
S88° 56' 30" E
140'0" Out to Out
180'0"
Toe of slope (typ)
Top of cut (typ)
PLAN
⊗ Indicates location of minimum vertical clearance
44'-6"
1'-3" curb
2'0
4'0
24'-0"
10'-0
2'0
1'-3" curb
2" Bituminous pavement over membrane
Profile Grade
Slope Varies
Type 5 Bridge Rail
7'-6"
Post-tensioned Concrete Box Girder
TYPICAL SECTION
347'-4½" Back Face to Back Face
1'-11⅛"
180'-0"
163'-0"
1'-7⅞"
Back Face Abut 1
℄ Bearing
℄ Pier 2
℄ Bearing
Back Face Abut. 3
El. 5023.34*
El. 5024.00*
El. 5023.58*
5020
5000
16'-6" min. cl.
Existing ground line
312
313
314
315
SECTION
(Taken at Profile Line)
* Finished roadway elevation
P.I. 5092.5
Sta 314+00.0
+2.3611%
-2.636%
Location of structure
1400' V.C.
VERTICAL CURVE DIAGRAM
Pile size
HP10×42
HP10×42
Location
Abut. 1
Abut. 3
Est. tip elev.
4992
4993
All piles are end bearing
Note* See Sheet #22 for pile tip elevations
Designed by
Checked by
Detailed by
FBL
EHH
9-73
DIVISION OF HIGHWAYS
GENERAL LAYOUT
Designer F. Lundberg
Detailer E. Hadley
Structure Numbers C-17-FA
Drawing Number B 2 of 18 Drawings
Revision Dates
(Preliminary Stage Only)

FORM NO. 160
ED: OCTOBER, 1970

FED. ROAD REG. NO.	DIVISION	PROJECT NO.	SHEET NO.	TOTAL SHEETS
9	COLO.	RF 034-1 (16)	18	

AS CONSTRUCTED
NO REVISIONS 1-7-77 REVISED [ ] VOID [ ]

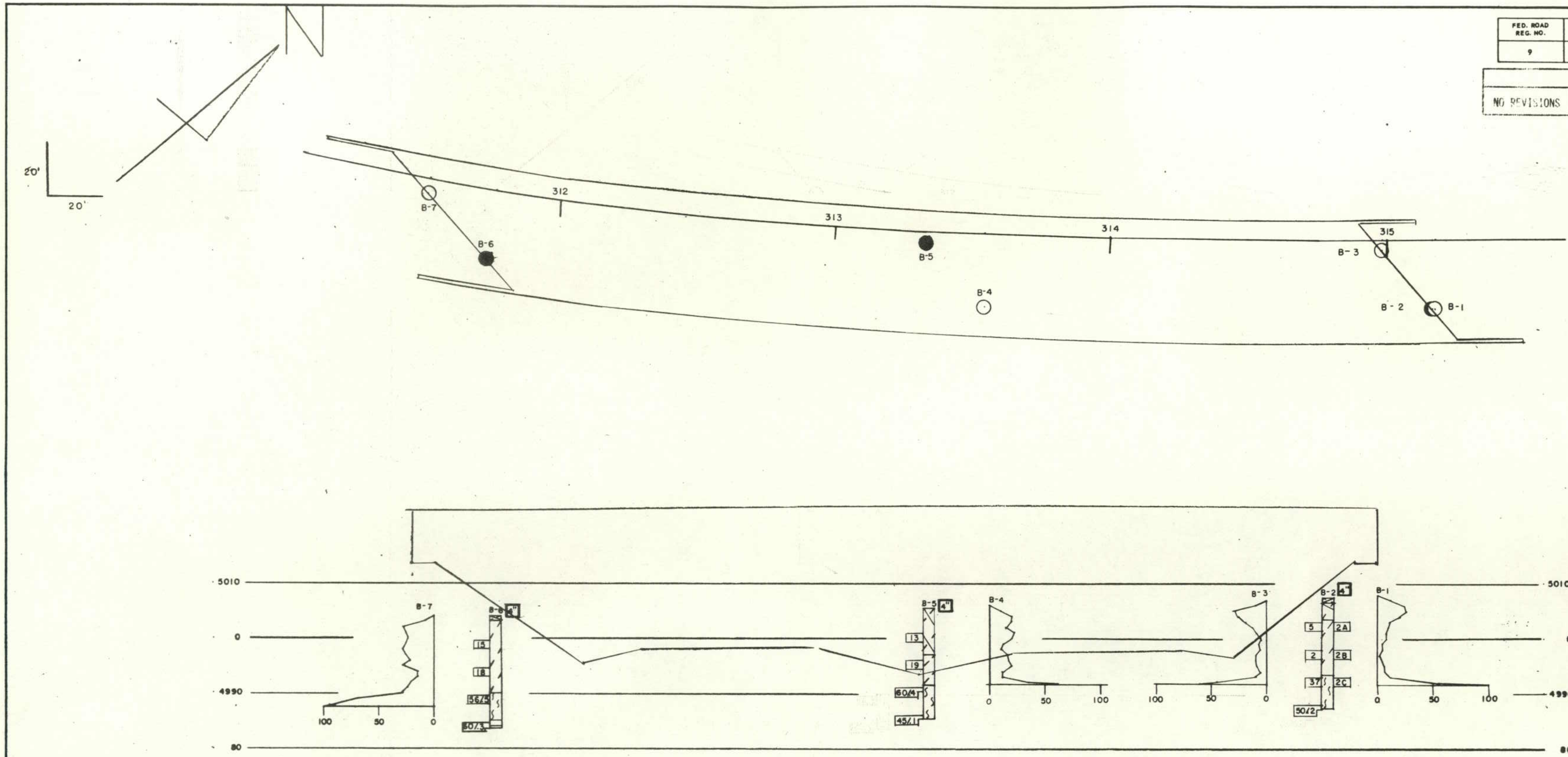

SUMMARY OF TEST RESULTS

Sample No.	Depth	Corps of Engrs. or Visual	AASHO	Gravel	Coarse Sand	Fine Sand	Silt and Clay	Liquid Limit L_w	Plastic Limit P_w	Plastic Index I_w	Water Cont. w %	Wet Unit Weight γ P.C.F.	Unconfined Strength Q_u T.S.F.	Unconsolidated φ	Unconsolidated C T.S.F.	Consolidated φ	Consolidated C T.S.F.	Time hrs.	Press P.S.I.	Dia. Of Sample (Inches)
2A	4.5-6	CLAY	A-4(7)	0	0	12	88	30	21	9	10.4									
2B	9.5-11	CLAY	A-4(7)	0	0	15	85	30	21	9	16.1									
2C	14.5-16	SILTY SAND	A-2-4(0)	0	0	78	22	32	29	3	15.5									

TYPE OF MATERIAL

- CLAYEY SILT
- SILTY CLAY
- SILT
- SHALE
- SANDSTONE

LEGEND

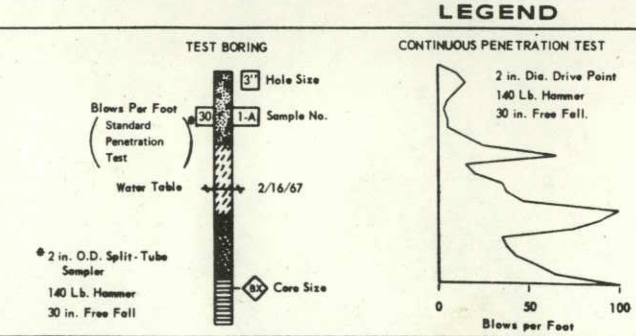

- ● Location of Test Boring
- ○ Location of Continuous Penetration Test
- ☐ Rotary Boring
- ☐ Auger Boring
- ◇ Core Boring

DIVISION OF HIGHWAYS
STATE OF COLORADO

ENGINEERING GEOLOGY

Across U.S. 34 (BYPASS)
Sta. 311+46.805 to 314+93.446
Near GREELEY Sec. 10, 15, T. 5N R. 67W
Geologist KWB
Made by SMO
Checked by
Approved by Bridge Engineer
Date: 12-1 1975

STRUCTURE NO. C-17-FB
DWG. NO. B 3 OF 18

STATE DEPARTMENT OF HIGHWAYS
DIVISION OF HIGHWAYS - STATE OF COLORADO

AS CONSTRUCTED			
NO REVISIONS	7-7-77	REVISED	VOID

FEDERAL ROAD REGION NO	DIVISION	PROJ. NO.	SHEET NO.	TOTAL SHEETS
VIII	COLORADO	RF034-1(16)	19	

REVISIONS		

DIVISION OF HIGHWAYS
STATE OF COLORADO
BRIDGE GEOMETRICS
DATE OF RUN : 76/02/11.

DATE OF DATA : 1/ /76
DESIGNER : MCMULLEN
CHECKER : TAKIGIKU
JOB DESCRIPTION : GREELEY BYPASS ELEVATIONS
PROJECT NO RF 034-1( )
STRUCTURE NO C-17-FA
DESIGN-MLM + DETAIL-AIT
INPUT BY AIT + JAN 76
ALL ELEVATIONS ARE 0.1667 FT.
BELOW FINISHED GRADE ELEVATION

* * * * * * * * * * * * * * * * * INPUT DATA * * * * * * * * * * * * * * * * *

HORIZONTAL ALIGNMENT DATA.....

DEGREE OF CURVATURE : 5 0 0.0
SPIRAL ANGLE (BACK) : 10 0 0.00 T.S. STATION 299+51.76 S.C. STATION 303+51.76
SPIRAL ANGLE (FWD) : 10 0 0.00 C.S. STATION 311+51.76 S.T. STATION 315+51.76

VERTICAL ALIGNMENT DATA.....

VERTICAL CURVE NO. 1 : PI STATION 314+ 0.00 PI ELEV 5032.333 VC LENGTH 1400.000 G1 2.361100 G2 -2.636000

SUPERELEVATION DATA.....

SUPERELEVATION NO. 1 : STATION 311+51.76 RATE LEFT -.0800 RATE RIGHT .0800
SUPERELEVATION NO. 2 : STATION 315+51.76 RATE LEFT 0.0000 RATE RIGHT 0.0000
SUPERELEVATION NO. 3 : STATION 316+51.76 RATE LEFT .0150 RATE RIGHT -.0150

BRIDGE DATA.....

LENGTH OF BRIDGE 343.000000 FT. DEFINITION 4 ....FORWARD TANGENT LENGTH
REFERENCE LINE STATION 315+51.76
CENTERLINE RADIUS OF CIRCULAR CURVE -1145.90000 FT. (LEFT CURVE(-) RIGHT CURVE(+)..)
BRIDGE SKEW (AT REFERENCE LINE) -40 46 30.00 (LEFT SKEW (-) RIGHT SKEW (+)..)

R.W. INDICATES RETAINING WALL

DESCRIPTION OF BENT LINE	DESCRIPTION OF LINE	STATION OF INTERSECTION OF LINE AND BENT LINE	ROADWAY ELEVATION AT INTERSECTION OF LINE AND BENT LINE
END N.R.W. A1			
	NORTH OUT	311+11.577	5022.2999
END N.WING A1			
	NORTH OUT	311+21.641	5022.3878
END S.R.W. A1			
	SOUTH OUT	311+54.565	5026.1872
END S.WING A1			
	SOUTH OUT	311+74.926	5026.1622
BF ABUT 1			
	NORTH OUT	311+37.743	5022.5211
	CL WEB 1	311+41.143	5022.8393
	PROFILE	311+46.805	5023.1720
	CL WEB 2	311+51.413	5023.5069
	CL WEB 3	311+60.474	5024.1468
	CL RD WY	311+64.931	5024.4550
	CL WEB 4	311+69.341	5024.7556
	CL WEB 5	311+78.026	5025.3349
	CL WEB 6	311+86.542	5025.8857
	SOUTH OUT	311+90.462	5026.1332
	TANGENT	311+71.116	5024.8754
CL ABUT 1			
	NORTH OUT	311+39.761	5022.5371
	CL WEB 1	311+44.145	5022.8515
	PROFILE	311+48.790	5023.1871
	CL WEB 2	311+53.382	5023.5191
	CL WEB 3	311+62.413	5024.1547
	CL RD WY	311+66.855	5024.4611
	CL WEB 4	311+71.251	5024.7600
	CL WEB 5	311+79.910	5025.3358
	CL WEB 6	311+88.401	5025.8832
	SOUTH OUT	311+92.309	5026.1292
	TANGENT	311+72.720	5024.8589
1/ 20 PT.= 1			
	NORTH OUT	311+48.905	5022.6080
	CL WEB 1	311+53.219	5022.9203
	PROFILE	311+57.790	5023.2492
	CL WEB 2	311+62.310	5023.5701
	CL WEB 3	311+71.205	5024.1890
	CL RD WY	311+75.583	5024.4872
	CL WEB 4	311+79.917	5024.7780
	CL WEB 5	311+88.457	5025.3382
	CL WEB 6	311+96.838	5025.8704
	SOUTH OUT	312+ .698	5026.1094
	TANGENT	311+80.042	5024.7864
2/ 20 PT.= 1			
	NORTH OUT	311+58.046	5022.6799
	CL WEB 1	311+62.291	5022.9858
	PROFILE	311+66.790	5023.3060
	CL WEB 2	311+71.241	5023.6184
	CL WEB 3	311+80.005	5024.2206
	CL RD WY	311+84.321	5024.5104
	CL WEB 4	311+88.595	5024.7934
	CL WEB 5	311+97.023	5025.3379
	CL WEB 6	312+ 5.298	5025.8549
	SOUTH OUT	312+ 9.110	5026.0870
	TANGENT	311+87.449	5024.7180
3/ 20 PT.= 1			
	NORTH OUT	311+67.181	5022.7507
	CL WEB 1	311+71.359	5023.0484
	PROFILE	311+75.790	5023.3599
	CL WEB 2	311+80.175	5023.6638
	CL WEB 3	311+88.814	5024.2494
	CL RD WY	311+93.070	5024.5313
	CL WEB 4	311+97.287	5024.8062
	CL WEB 5	312+ 5.605	5025.3351
	CL WEB 6	312+13.777	5025.8369
	SOUTH OUT	312+17.544	5026.0620
	TANGENT	311+94.938	5024.6536
4/ 20 PT.= 1			
	NORTH OUT	311+76.310	5022.8185
	CL WEB 1	311+80.425	5023.1080
	PROFILE	311+84.790	5023.4109
	CL WEB 2	311+89.112	5023.7063
	CL WEB 3	311+97.630	5024.2754
	CL RD WY	312+ 1.829	5024.5493
	CL WEB 4	312+ 5.990	5024.8162
	CL WEB 5	312+14.203	5025.3296
	CL WEB 6	312+22.277	5025.8163
	SOUTH OUT	312+26.000	5026.0344
	TANGENT	312+ 2.507	5024.5931
5/ 20 PT.= 1			
	NORTH OUT	311+85.434	5022.8832
	CL WEB 1	311+89.488	5023.1647
	PROFILE	311+93.790	5023.4590
	CL WEB 2	311+98.051	5023.7460
	CL WEB 3	312+ 6.453	5024.2987
	CL RD WY	312+10.597	5024.5646
	CL WEB 4	312+14.705	5024.8236
	CL WEB 5	312+22.817	5025.3214
	CL WEB 6	312+30.796	5025.7930
	SOUTH OUT	312+34.477	5026.0042
	TANGENT	312+10.153	5024.5363
6/ 20 PT.= 1			
	NORTH OUT	311+94.553	5022.9450
	CL WEB 1	311+98.548	5023.2184
	PROFILE	312+ 2.790	5023.5042
	CL WEB 2	312+ 6.992	5023.7829
	CL WEB 3	312+15.284	5024.3193
	CL RD WY	312+19.375	5024.5771
	CL WEB 4	312+23.432	5024.8283
	CL WEB 5	312+31.446	5025.3106
	CL WEB 6	312+39.334	5025.7670
	SOUTH OUT	312+42.974	5025.9713
	TANGENT	312+17.874	5024.6831
7/ 20 PT.= 1			
	NORTH OUT	312+ 3.667	5023.0037
	CL WEB 1	312+ 7.606	5023.2691
	PROFILE	312+11.790	5023.5466
	CL WEB 2	312+15.936	5023.8170
	CL WEB 3	312+24.121	5024.3371
	CL RD WY	312+28.161	5024.5870
	CL WEB 4	312+32.169	5024.8302
	CL WEB 5	312+40.090	5025.2971
	CL WEB 6	312+47.890	5025.7384
	SOUTH OUT	312+51.491	5025.9358
	TANGENT	312+25.667	5024.4332
8/ 20 PT.= 1			
	NORTH OUT	312+12.776	5023.0595
	CL WEB 1	312+16.662	5023.3169
	PROFILE	312+20.790	5023.5860
	CL WEB 2	312+24.882	5023.8481
	CL WEB 3	312+32.964	5024.3521
	CL RD WY	312+36.956	5024.5940
	CL WEB 4	312+40.917	5024.8294
	CL WEB 5	312+48.747	5025.2809
	CL WEB 6	312+56.463	5025.7072
	SOUTH OUT	312+60.027	5025.8976
	TANGENT	312+33.530	5024.3866
9/ 20 PT.= 1			
	NORTH OUT	312+21.881	5023.1123
	CL WEB 1	312+25.716	5023.3618
	PROFILE	312+29.790	5023.6226
	CL WEB 2	312+33.831	5023.8765
	CL WEB 3	312+41.814	5024.3643
	CL RD WY	312+45.759	5024.5983
	CL WEB 4	312+49.674	5024.8259
	CL WEB 5	312+57.419	5025.2620
	CL WEB 6	312+65.054	5025.6732
	SOUTH OUT	312+68.581	5025.8567
	TANGENT	312+41.461	5024.3431
10/ 20 PT.= 1			
	NORTH OUT	312+30.982	5023.1621
	CL WEB 1	312+34.767	5023.4038
	PROFILE	312+38.790	5023.6562
	CL WEB 2	312+42.781	5023.9020
	CL WEB 3	312+50.670	5024.3737
	CL RD WY	312+54.570	5024.5998
	CL WEB 4	312+58.442	5024.8196
	CL WEB 5	312+66.103	5025.2404
	CL WEB 6	312+73.660	5025.6365
	SOUTH OUT	312+77.153	5025.8131
	TANGENT	312+49.456	5024.3023
11/ 20 PT.= 1			
	NORTH OUT	312+40.078	5023.2089
	CL WEB 1	312+43.816	5023.4428
	PROFILE	312+47.790	5023.6870
	CL WEB 2	312+51.733	5023.9246
	CL WEB 3	312+59.532	5024.3803
	CL RD WY	312+63.389	5024.5986
	CL WEB 4	312+67.219	5024.8106
	CL WEB 5	312+74.800	5025.2160
	CL WEB 6	312+82.283	5025.5971
	SOUTH OUT	312+85.742	5025.7668
	TANGENT	312+57.514	5024.2642
12/ 20 PT.= 1			
	NORTH OUT	312+49.171	5023.2527
	CL WEB 1	312+52.863	5023.4789
	PROFILE	312+56.790	5023.7149
	CL WEB 2	312+60.688	5023.9444
	CL WEB 3	312+68.399	5024.3841
	CL RD WY	312+72.215	5024.5946
	CL WEB 4	312+76.005	5024.7988
	CL WEB 5	312+83.510	5025.1889
	CL WEB 6	312+90.921	5025.5550
	SOUTH OUT	312+94.349	5025.7177
	TANGENT	312+65.633	5024.2285
13/ 20 PT.= 1			
	NORTH OUT	312+58.259	5023.2936
	CL WEB 1	312+61.908	5023.5120
	PROFILE	312+65.790	5023.7399
	CL WEB 2	312+69.644	5023.9613
	CL WEB 3	312+77.272	5024.3851
	CL RD WY	312+81.048	5024.5878
	CL WEB 4	312+84.800	5024.7842
	CL WEB 5	312+92.232	5025.1591
	CL WEB 6	312+99.574	5025.5101
	SOUTH OUT	313+ 2.971	5025.6659
	TANGENT	312+73.809	5024.1951
14/ 20 PT.= 1			
	NORTH OUT	312+67.344	5023.3315
	CL WEB 1	312+70.951	5023.5423
	PROFILE	312+74.790	5023.7620
	CL WEB 2	312+78.602	5023.9753
	CL WEB 3	312+86.151	5024.3833
	CL RD WY	312+89.889	5024.5782
	CL WEB 4	312+93.603	5024.7669
	CL WEB 5	313+ .965	5025.1265
	CL WEB 6	313+ 8.242	5025.4625
	SOUTH OUT	313+11.610	5025.6114
	TANGENT	312+82.041	5024.1636
15/ 20 PT.= 1			
	NORTH OUT	312+76.425	5023.3664
	CL WEB 1	312+79.993	5023.5696
	PROFILE	312+83.790	5023.7812
	CL WEB 2	312+87.562	5023.9865
	CL WEB 3	312+95.034	5024.3787
	CL RD WY	312+98.736	5024.5657
	CL WEB 4	313+ 2.415	5024.7468
	CL WEB 5	313+ 9.710	5025.0911
	CL WEB 6	313+16.924	5025.4121
	SOUTH OUT	313+20.264	5025.5540
	TANGENT	312+90.326	5024.1338
16/ 20 PT.= 1			
	NORTH OUT	312+85.503	5023.3984
	CL WEB 1	312+89.032	5023.5940
	PROFILE	312+92.790	5023.7975
	CL WEB 2	312+96.524	5023.9948
	CL WEB 3	313+ 3.923	5024.3713
	CL RD WY	313+ 7.590	5024.5505
	CL WEB 4	313+11.235	5024.7239
	CL WEB 5	313+18.466	5025.0529
	CL WEB 6	313+25.620	5025.3589
	SOUTH OUT	313+28.933	5025.4939
	TANGENT	312+98.662	5024.1056
17/ 20 PT.= 1			
	NORTH OUT	312+94.577	5023.4275
	CL WEB 1	312+98.070	5023.6154
	PROFILE	313+ 1.790	5023.8109
	CL WEB 2	313+ 5.487	5024.0003
	CL WEB 3	313+12.817	5024.3610
	CL RD WY	313+16.450	5024.5325
	CL WEB 4	313+20.063	5024.6981
	CL WEB 5	313+27.233	5025.0120
	CL WEB 6	313+34.329	5025.3030
	SOUTH OUT	313+37.617	5025.4310
	TANGENT	313+ 7.047	5024.0787
18/ 20 PT.= 1			
	NORTH OUT	313+ 3.648	5023.4536
	CL WEB 1	313+ 7.106	5023.6340
	PROFILE	313+10.790	5023.8214
	CL WEB 2	313+14.452	5024.0029
	CL WEB 3	313+21.715	5024.3479
	CL RD WY	313+25.317	5024.5117
	CL WEB 4	313+28.899	5024.6696
	CL WEB 5	313+36.010	5024.9682
	CL WEB 6	313+43.052	5025.2442
	SOUTH OUT	313+46.316	5025.3653
	TANGENT	313+15.478	5024.0528
19/ 20 PT.= 1			
	NORTH OUT	313+12.716	5023.4767
	CL WEB 1	313+16.141	5023.6496
	PROFILE	313+19.790	5023.8291
	CL WEB 2	313+23.419	5024.0026
	CL WEB 3	313+30.618	5024.3320
	CL RD WY	313+34.189	5024.4880
	CL WEB 4	313+37.743	5024.6383
	CL WEB 5	313+44.798	5024.9217
	CL WEB 6	313+51.788	5025.1826
	SOUTH OUT	313+55.029	5025.2968
	TANGENT	313+23.954	5024.0278
CL PIER 2			
	NORTH OUT	313+21.781	5023.4969
	CL WEB 1	313+25.174	5023.6623
	PROFILE	313+28.790	5023.8338
	CL WEB 2	313+32.387	5023.9995
	CL WEB 3	313+39.525	5024.3132
	CL RD WY	313+43.068	5024.4615
	CL WEB 4	313+46.594	5024.6041
	CL WEB 5	313+53.596	5024.8723
	CL WEB 6	313+60.537	5025.1183
	SOUTH OUT	313+63.756	5025.2255
	TANGENT	313+32.472	5024.0033
1/ 20 PT.= 2			
	NORTH OUT	313+29.987	5023.5127
	CL WEB 1	313+33.352	5023.6713
	PROFILE	313+36.940	5023.8356
	CL WEB 2	313+40.509	5023.9941
	CL WEB 3	313+47.596	5024.2938
	CL RD WY	313+51.113	5024.4351
	CL WEB 4	313+54.615	5024.5707
	CL WEB 5	313+61.572	5024.8252
	CL WEB 6	313+68.471	5025.0575
	SOUTH OUT	313+71.671	5025.1584
	TANGENT	313+40.220	5023.9815

	INITIAL	DATE	CHECKED BY	EHH	2-76
DESIGNED BY	MLM	12-75	QUANTITIES BY	KDH	2-76
CHECKED BY	RRA	1-76	CHECKED BY	AIT	2-76
DETAILED BY	AIT	1-76		KDH	2-76

DIVISION OF HIGHWAYS

ELEVATIONS

Designer	M. McMULLEN	Structure Numbers	C-17-FA
Detailer	A. TAKIGIKU		
Drawing Number B	4 of 18 Drawings		

Revision Dates (Preliminary Stage Only)

STATE DEPARTMENT OF HIGHWAYS
DIVISION OF HIGHWAYS - STATE OF COLORADO
DBM FORM NO 117
REV. OCTOBER 1973

FEDERAL ROAD REGION NO.	DIVISION	PROJ. NO.	SHEET NO.	TOTAL SHEETS
VIII	COLORADO	RF034-1(16)	20	

REVISIONS

AS CONSTRUCTED

NO REVISIONS ✓ REVISED ☐ VOID ☐

2/ 20 PT.= 2

NORTH OUT	313+38.190	5023.5260
CL WEB 1	313+41.529	5023.6779
PROFILE	313+45.090	5023.8351
CL WEB 2	313+48.633	5023.9864
CL WEB 3	313+55.669	5024.2720
CL RD WY	313+59.163	5024.4063
CL WEB 4	313+62.642	5024.5350
CL WEB 5	313+69.556	5024.7757
CL WEB 6	313+76.414	5024.9944
SOUTH OUT	313+79.597	5025.0890
TANGENT	313+48.000	5023.9598

3/ 20 PT.= 2

NORTH OUT	313+46.391	5023.5370
CL WEB 1	313+49.705	5023.6822
PROFILE	313+53.240	5023.8321
CL WEB 2	313+56.758	5023.9764
CL WEB 3	313+63.747	5024.2479
CL RD WY	313+67.218	5024.3752
CL WEB 4	313+70.675	5024.4970
CL WEB 5	313+77.548	5024.7239
CL WEB 6	313+84.368	5024.9290
SOUTH OUT	313+87.534	5025.0173
TANGENT	313+55.810	5023.9380

4/ 20 PT.= 2

NORTH OUT	313+54.590	5023.5455
CL WEB 1	313+57.880	5023.6840
PROFILE	313+61.390	5023.8268
CL WEB 2	313+64.884	5023.9640
CL WEB 3	313+71.827	5024.2214
CL RD WY	313+75.277	5024.3418
CL WEB 4	313+78.714	5024.4566
CL WEB 5	313+85.547	5024.6698
CL WEB 6	313+92.331	5024.8613
SOUTH OUT	313+95.481	5024.9432
TANGENT	313+63.648	5023.9161

5/ 20 PT.= 2

NORTH OUT	313+62.786	5023.5517
CL WEB 1	313+66.054	5023.6835
PROFILE	313+69.540	5023.8192
CL WEB 2	313+73.011	5023.9492
CL WEB 3	313+79.911	5024.1926
CL RD WY	313+83.341	5024.3060
CL WEB 4	313+86.758	5024.4139
CL WEB 5	313+93.554	5024.6133
CL WEB 6	314+ .304	5024.7911
SOUTH OUT	314+ 3.439	5024.8668
TANGENT	313+71.514	5023.8937

6/ 20 PT.= 2

NORTH OUT	313+70.980	5023.5554
CL WEB 1	313+74.226	5023.6805
PROFILE	313.77.690	5023.8091
CL WEB 2	313+81.140	5023.9321
CL WEB 3	313+87.999	5024.1615
CL RD WY	313+91.409	5024.2679
CL WEB 4	313+94.807	5024.3689
CL WEB 5	314+ 1.569	5024.5545
CL WEB 6	314+ 8.286	5024.7187
SOUTH OUT	314+11.407	5024.7880
TANGENT	313+79.405	5023.8709

7/ 20 PT.= 2

NORTH OUT	313+79.172	5023.5568
CL WEB 1	313+82.398	5023.6752
PROFILE	313+85.840	5023.7967
CL WEB 2	313+89.269	5023.9126
CL WEB 3	313+96.090	5024.1280
CL RD WY	313+99.482	5024.2274
CL WEB 4	314+ 2.862	5024.3215
CL WEB 5	314+ 9.591	5024.4934
CL WEB 6	314+16.278	5024.6439
SOUTH OUT	314+19.386	5024.7068
TANGENT	313+87.321	5023.8474

8/ 20 PT.= 2

NORTH OUT	313+87.362	5023.5557
CL WEB 1	313+90.568	5023.6675
PROFILE	313.93.990	5023.7819
CL WEB 2	313+97.400	5023.8908
CL WEB 3	314+ 4.184	5024.0921
CL RD WY	314+ 7.558	5024.1846
CL WEB 4	314+10.923	5024.2717
CL WEB 5	314+17.620	5024.4299
CL WEB 6	314+24.280	5024.5667
SOUTH OUT	314+27.375	5024.6232
TANGENT	313+95.259	5023.8230

9/ 20 PT.= 2

NORTH OUT	313+95.550	5023.5523
CL WEB 1	313+98.737	5023.6574
PROFILE	314+ 2.140	5023.7647
CL WEB 2	314+ 5.531	5023.8666
CL WEB 3	314+12.281	5024.0539
CL RD WY	314+15.640	5024.1395
CL WEB 4	314+18.988	5024.2197
CL WEB 5	314+25.657	5024.3640
CL WEB 6	314+32.290	5024.4871
SOUTH OUT	314+35.374	5024.5373
TANGENT	314+ 3.219	5023.7977

10/ 20 PT.= 2

NORTH OUT	314+ 3.735	5023.5465
CL WEB 1	314+ 6.905	5023.6450
PROFILE	314+10.290	5023.7452
CL WEB 2	314+13.664	5023.8400
CL WEB 3	314+20.381	5024.0134
CL RD WY	314+23.725	5024.0920
CL WEB 4	314+27.059	5024.1652
CL WEB 5	314+33.761	5024.2957
CL WEB 6	314+40.310	5024.4051
SOUTH OUT	314+43.383	5024.4490
TANGENT	314+11.200	5023.7713

11/ 20 PT.= 2

NORTH OUT	314+11.918	5023.5383
CL WEB 1	314+15.072	5023.6301
PROFILE	314+18.440	5023.7233
CL WEB 2	314+21.798	5023.8111
CL WEB 3	314+28.485	5023.9704
CL RD WY	314+31.814	5024.0421
CL WEB 4	314+35.135	5024.1084
CL WEB 5	314+41.752	5024.2251
CL WEB 6	314+48.338	5024.3208
SOUTH OUT	314+51.402	5024.3582
TANGENT	314+19.199	5023.7436

12/ 20 PT.= 2

NORTH OUT	314+20.100	5023.5277
CL WEB 1	314+23.238	5023.6129
PROFILE	314+26.590	5023.6990
CL WEB 2	314+29.933	5023.7798
CL WEB 3	314+36.591	5023.9252
CL RD WY	314+39.907	5023.9898
CL WEB 4	314+43.216	5024.0492
CL WEB 5	314+49.810	5024.1521
CL WEB 6	314+56.376	5024.2340
SOUTH OUT	314+59.431	5024.2651
TANGENT	314+27.217	5023.7146

13/ 20 PT.= 2

NORTH OUT	314+28.279	5023.5147
CL WEB 1	314+31.402	5023.5933
PROFILE	314+34.740	5023.6724
CL WEB 2	314+38.069	5023.7461
CL WEB 3	314+44.701	5023.8775
CL RD WY	314+48.005	5023.9352
CL WEB 4	314+51.302	5023.9877
CL WEB 5	314+57.874	5024.0768
CL WEB 6	314+64.422	5024.1449
SOUTH OUT	314+67.470	5024.1695
TANGENT	314+35.251	5023.6841

14/ 20 PT.= 2

NORTH OUT	314+36.456	5023.4993
CL WEB 1	314+39.566	5023.5714
PROFILE	314+42.890	5023.6434
CL WEB 2	314+46.206	5023.7101
CL WEB 3	314+52.813	5023.8275
CL RD WY	314+56.106	5023.8783
CL WEB 4	314+59.393	5023.9238
CL WEB 5	314+65.946	5023.9990
CL WEB 6	314+72.477	5024.0533
SOUTH OUT	314+75.518	5024.0715
TANGENT	314+43.301	5023.6519

15/ 20 PT.= 2

NORTH OUT	314+44.632	5023.4815
CL WEB 1	314+47.729	5023.5470
PROFILE	314+51.040	5023.6120
CL WEB 2	314+54.343	5023.6717
CL WEB 3	314+60.929	5023.7751
CL RD WY	314+64.212	5023.8189
CL WEB 4	314+67.489	5023.8575
CL WEB 5	314+74.025	5023.9188
CL WEB 6	314+80.541	5023.9593
SOUTH OUT	314+83.576	5023.9711
TANGENT	314+51.364	5023.6181

16/ 20 PT.= 2

NORTH OUT	314+52.805	5023.4614
CL WEB 1	314+55.891	5023.5203
PROFILE	314+59.190	5023.5782
CL WEB 2	314+62.482	5023.6309
CL WEB 3	314+69.048	5023.7204
CL RD WY	314+72.321	5023.7572
CL WEB 4	314+75.589	5023.7888
CL WEB 5	314+82.110	5023.8363
CL WEB 6	314+88.614	5023.8629
SOUTH OUT	314+91.643	5023.8682
TANGENT	314+59.441	5023.5825

17/ 20 PT.= 2

NORTH OUT	314+60.976	5023.4389
CL WEB 1	314+64.052	5023.4912
PROFILE	314+67.340	5023.5421
CL WEB 2	314+70.622	5023.5878
CL WEB 3	314+77.169	5023.6632
CL RD WY	314+80.434	5023.6931
CL WEB 4	314+83.695	5023.7177
CL WEB 5	314+90.203	5023.7513
CL WEB 6	314+96.695	5023.7640
SOUTH OUT	314+99.720	5023.7629
TANGENT	314+67.530	5023.5449

18/ 20 PT.= 2

NORTH OUT	314+69.146	5023.4140
CL WEB 1	314+72.211	5023.4597
PROFILE	314+75.490	5023.5036
CL WEB 2	314+78.763	5023.5422
CL WEB 3	314+85.293	5023.6037
CL RD WY	314+88.552	5023.6266
CL WEB 4	314+91.805	5023.6443
CL WEB 5	314+98.302	5023.6639
CL WEB 6	315+ 4.785	5023.6628
SOUTH OUT	315+ 7.806	5023.6551
TANGENT	314+75.630	5023.5054

19/ 20 PT.= 2

NORTH OUT	314+77.313	5023.3867
CL WEB 1	314+80.370	5023.4259
PROFILE	314+83.640	5023.4628
CL WEB 2	314+86.905	5023.4944
CL WEB 3	314+93.421	5023.5418
CL RD WY	314+96.673	5023.5577
CL WEB 4	314+99.921	5023.5684
CL WEB 5	315+ 6.407	5023.5741
CL WEB 6	315+12.883	5023.5590
SOUTH OUT	315+15.902	5023.5449
TANGENT	314+83.740	5023.4638

CL ABUT 3

NORTH OUT	314+85.479	5023.3571
CL WEB 1	314+88.528	5023.3897
PROFILE	314+91.790	5023.4195
CL WEB 2	314+95.048	5023.4441
CL WEB 3	315+ 1.551	5023.4776
CL RD WY	315+ 4.798	5023.4865
CL WEB 4	315+ 8.041	5023.4902
CL WEB 5	315+14.520	5023.4819
CL WEB 6	315+20.990	5023.4528
SOUTH OUT	315+24.007	5023.4321
TANGENT	314+91.858	5023.4201

BF ABUT 3

NORTH OUT	314+87.138	5023.3508
CL WEB 1	314+90.186	5023.3820
PROFILE	314+93.446	5023.4104
CL WEB 2	314+ 6.702	5023.4336
CL WEB 3	315+ 3.204	5023.4642
CL RD WY	315+ 6.449	5023.4717
CL WEB 4	315+ 9.691	5023.4740
CL WEB 5	315+16.169	5023.4629
CL WEB 6	315+22.638	5023.4310
SOUTH OUT	315+25.655	5023.4089
TANGENT	314+93.509	5023.4109

END N.WING A3

NORTH OUT	315+ 3.153	5023.2848

END N.R.W. A3

NORTH OUT	315+13.159	5023.2389

END S.WING A3

SOUTH OUT	315+41.632	5023.1790

END S.R.W. A3

SOUTH OUT	315+51.628	5023.0304

	INITIAL	DATE		
DESIGNED BY	M L M	12-75	CHECKED BY	E H H 2-76
CHECKED BY	R R A	1-76	QUANTITIES BY	K D H 2-76
DETAILED BY	A T T	1-76	CHECKED BY	A T T 2-76
				K D H 2-76

DIVISION OF HIGHWAYS

ELEVATIONS

Designer M. McMULLEN
Detailer A. TAKIGIKU
Structure Numbers C-17-FA
Drawing Number B 5 of 18 Drawings

Revision Dates (Preliminary Stage Only)

STATE DEPARTMENT OF HIGHWAYS
DIVISION OF HIGHWAYS STATE OF COLORADO
DOH FORM NO. 117
REV. JAN. 1970

AS CONSTRUCTED				
NO REVISIONS	7-7-77	REVISED		VOID

FEDERAL ROAD REGION NO.	DIVISION	PROJ. NO.	SHEET NO.	TOTAL SHEETS
VIII	COLORADO	RF 034-1(16)	21	

REVISIONS		

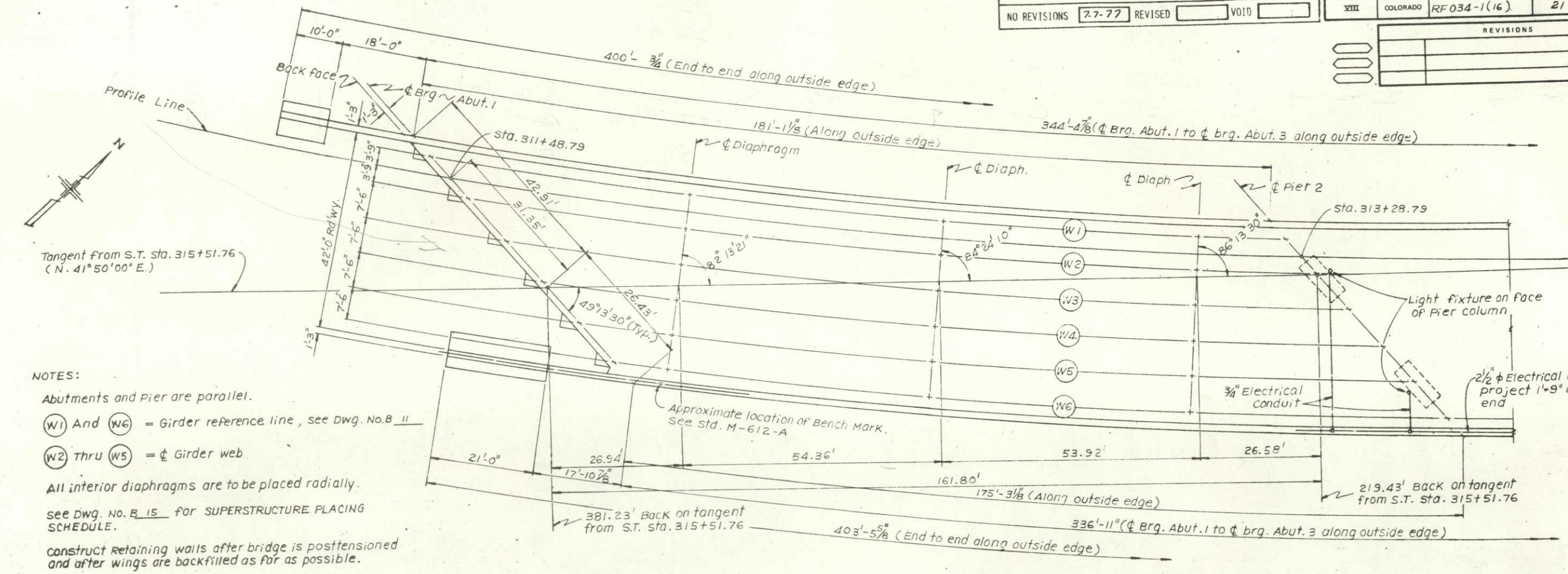

NOTES:

Abutments and Pier are parallel.

(W1) And (W6) = Girder reference line, see Dwg. No. B 11

(W2) Thru (W5) = ℄ Girder web

All interior diaphragms are to be placed radially.

See Dwg. No. B 15 for SUPERSTRUCTURE PLACING SCHEDULE.

Construct Retaining walls after bridge is posttensioned and after wings are backfilled as far as possible.

SPAN 1

CONSTRUCTION LAYOUT

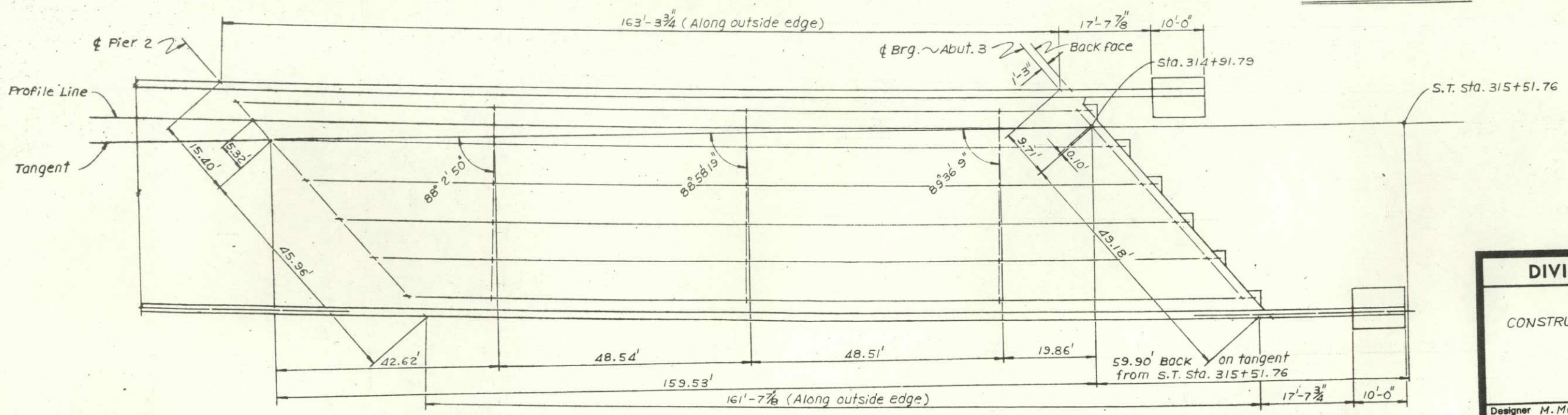

SPAN 2

INITIAL	DATE		
DESIGNED BY	MLM	12-75	CHECKED BY EHH 2-76
CHECKED BY	RRA	1-76	QUANTITIES BY KDH 2-76
DETAILED BY	AIT	1-76	CHECKED BY AIT 2-76

DIVISION OF HIGHWAYS

CONSTRUCTION LAYOUT

Designer	M. MCMULLEN	Structure Numbers	C-17-FA
Detailer	A. TAKIGIKU		
Drawing Number B	6	of	18 Drawings

Revision Dates (Preliminary Stage Only)

AS CONSTRUCTED

NO REVISIONS [ ] REVISED 7-7-77 VOID [ ]

FEDERAL ROAD REGION NO.	DIVISION	PROJ. NO.	SHEET NO.	TOTAL SHEETS
VIII	COLORADO	RF 034-1(16)	22	

		REVISIONS	
R1	HHH	Piling note	4-14-76

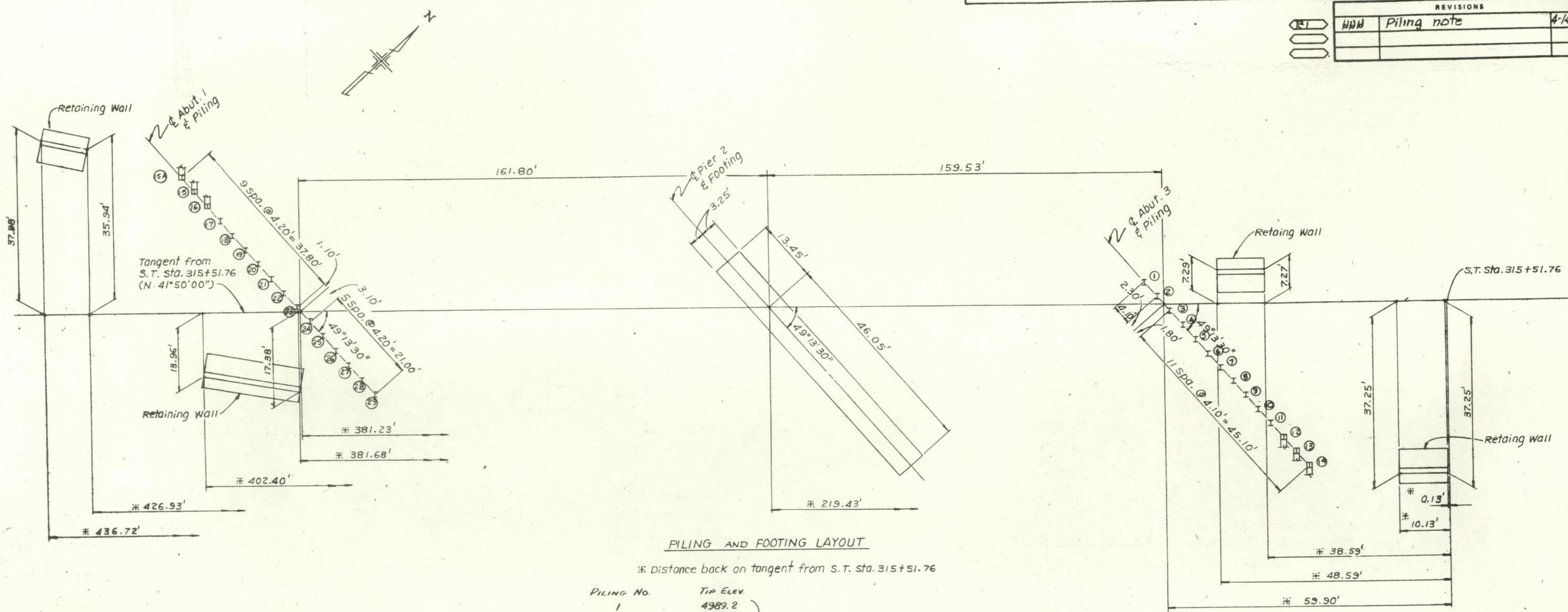

PILING AND FOOTING LAYOUT

* Distance back on tangent from S.T. Sta. 315+51.76

Piling No.	Tip Elev.	
1	4989.2	Abut 3
2	4989.2	Abut 3
3	4989.6	Abut 3
4	4989.5	Abut 3
5	4989.2	Abut 3
6	4989.2	Abut 3
7	4989.2	Abut 3
8	4989.3	Abut 3
9	4989.2	Abut 3
10	4988.5	Abut 3
11	4989.2	Abut 3
12	4989.7	Abut 3
13	4990.2	Abut 3
14	4988.9	Abut 3
15A	4986.9	Abut 1
15	4986.7	Abut 1
16	4986.2	Abut 1
17	4986.1	Abut 1
18	4986.3	Abut 1
19	4987.7	Abut 1
20	4987.8	Abut 1
21	4987.9	Abut 1
22	4987.6	Abut 1
23	4987.3	Abut 1
24	4988.4	Abut 1
25	4988.6	Abut 1
26	4988.3	Abut 1
27	4989.3	Abut 1
28	4989.5	Abut 1
29	4988.9	Abut 1

NOTES:

R-1 All piles are HP 10x42, placed in 16" dia. drilled holes 20' deep. Fill holes with bentonite slurry after piling is driven.

The web of piling shall be perpendicular to the Tangent.

H Denote piling is placed vertically.

⊞ Denote piling is battered 3:12 away from Tangent.

Max. pile load { Abut. 1 = 51.8 Tons; Abut. 3 = 51.0 Tons }

Max. footing pressure for pier 2 = 5.6 Tons/sq. Ft.

All dimensions shown are at the bottom of concrete.

	Initial	Date			
Designed by	MLM	12-75	Checked by	EHH	2-76
Checked by	RRA	1-76	Quantities by	AIT	2-76
Detailed by	AIT	1-76	Checked by	KDH	2-76

DIVISION OF HIGHWAYS

PILING AND FOOTING LAYOUT

Designer M. MC MULLEN

Detailer A. TAKIGIKU

Drawing Number B 7 of 18 Drawings

Structure Numbers C-17-FA

Revision Dates (Preliminary Stage Only)

STATE DEPARTMENT OF HIGHWAYS DIVISION OF HIGHWAYS-STATE OF COLORADO DOH FORM NO. 117 REV. JAN. 1975

STATE DEPARTMENT OF HIGHWAYS
DIVISION OF HIGHWAYS-STATE OF COLORADO

FEDERAL ROAD REGION NO.	DIVISION	PROJ. NO.	SHEET NO.	TOTAL SHEETS
VIII	COLORADO	RF034-1(16)	23	

AS CONSTRUCTED
NO REVISIONS 7-7-77 REVISED VOID

REVISIONS

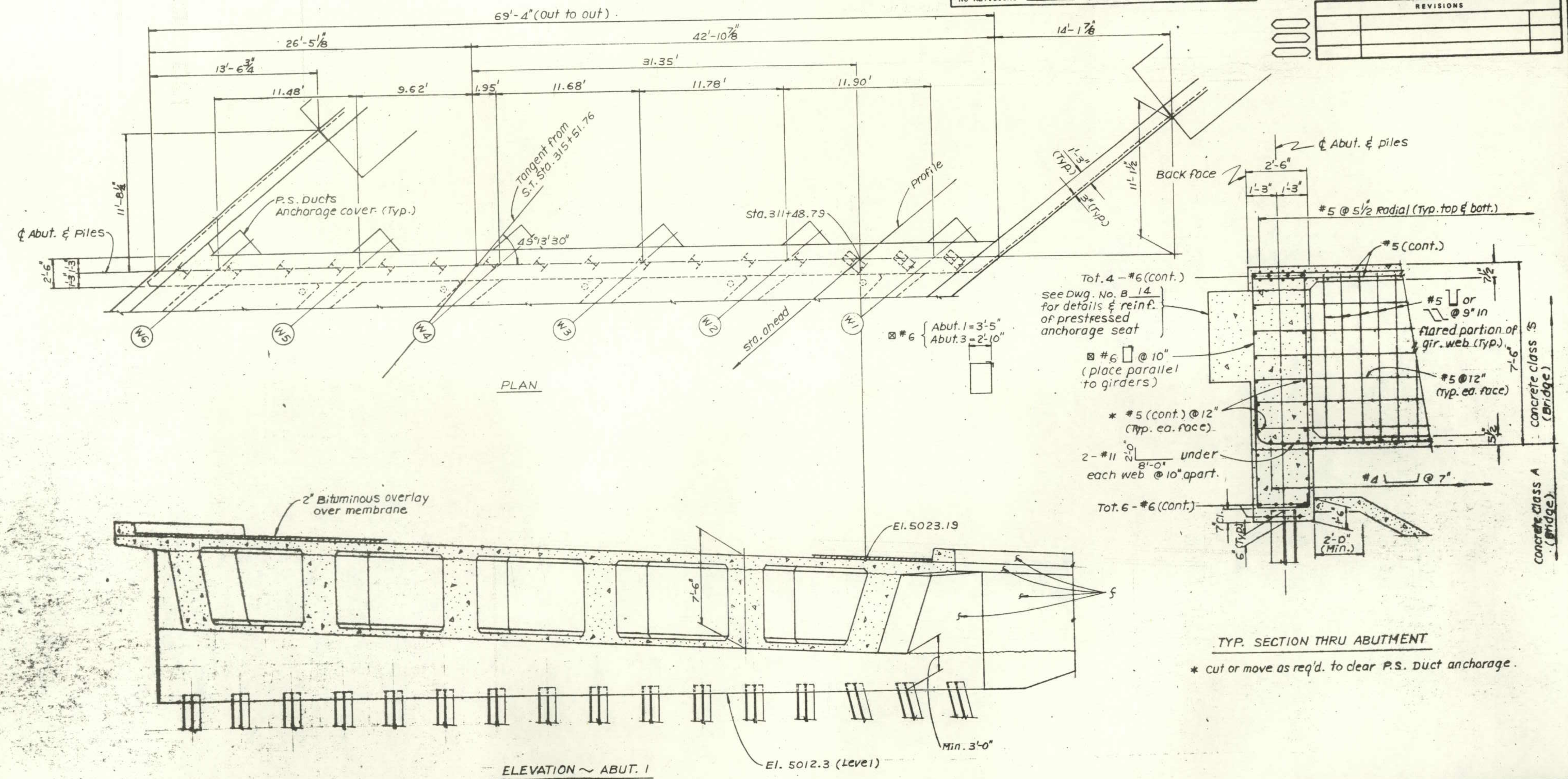

NOTES:

Wingwall, Abutment, Girders and slabs shall be poured monolithically up to construction joints.

Dimensions and elevations shown are at the ℄ of Abutment unless otherwise noted.

For curb details and reinforcing, see Dwg. No. B 16 Bridge Rail Type 5

For details of Prestressed Anchorage Bearing seat, See Dwg. No. B 14.

	INITIAL	DATE		
DESIGNED BY	MLM	12-75	CHECKED BY	EHH 2-76
CHECKED BY	RRA	1-76	QUANTITIES BY	KDH 2-76
DETAILED BY	AIT	1-76	QUANTITIES BY	AIT 2-76
			CHECKED BY	KDH 2-76

DIVISION OF HIGHWAYS

ABUTMENT DETAILS

Designer M. McMULLEN	Structure Numbers	C-17-FA	
Detailer A. TAKIGIKU			
Drawing Number B 8	of	18	Drawings

Revision Dates (Preliminary Stage Only)

STATE DEPARTMENT OF HIGHWAYS
DIVISION OF HIGHWAYS-STATE OF COLORADO
DOH FORM NO. 117
REV. JAN. 1970

AS CONSTRUCTED			
NO REVISIONS	7-7-77	REVISED	VOID

FEDERAL ROAD REGION NO.	DIVISION	PROJ. NO.	SHEET NO.	TOTAL SHEETS
VIII	COLORADO	RF 034-1(16)	24	

REVISIONS		

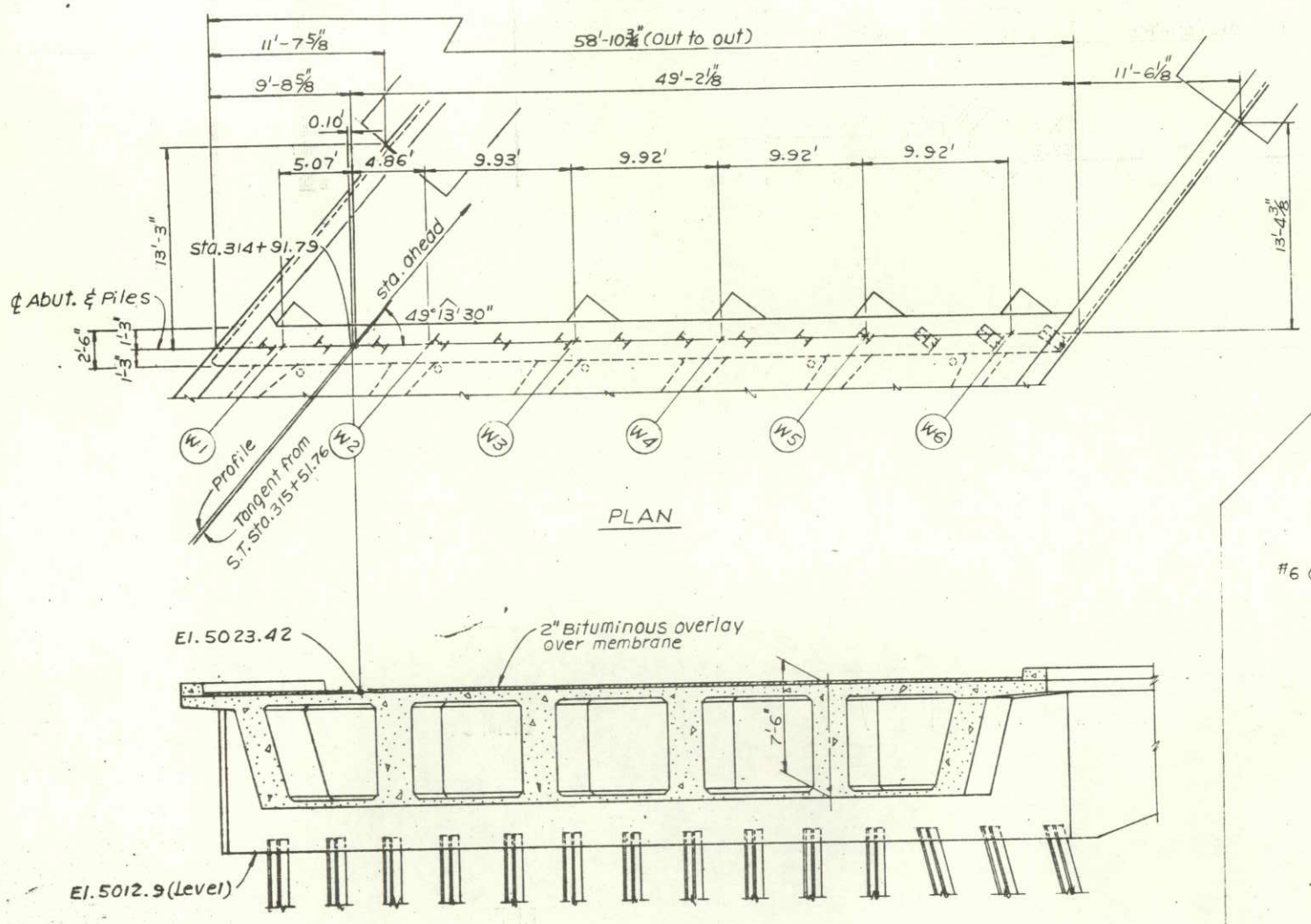

PLAN

ABUTMENT 3 ~ ELEVATION

NOTE:
Reinforcing for Abut. 3 is similar to Abut. 1
See Dwg. No. B 8 TYP. SECTION THRU ABUT. and NOTES.

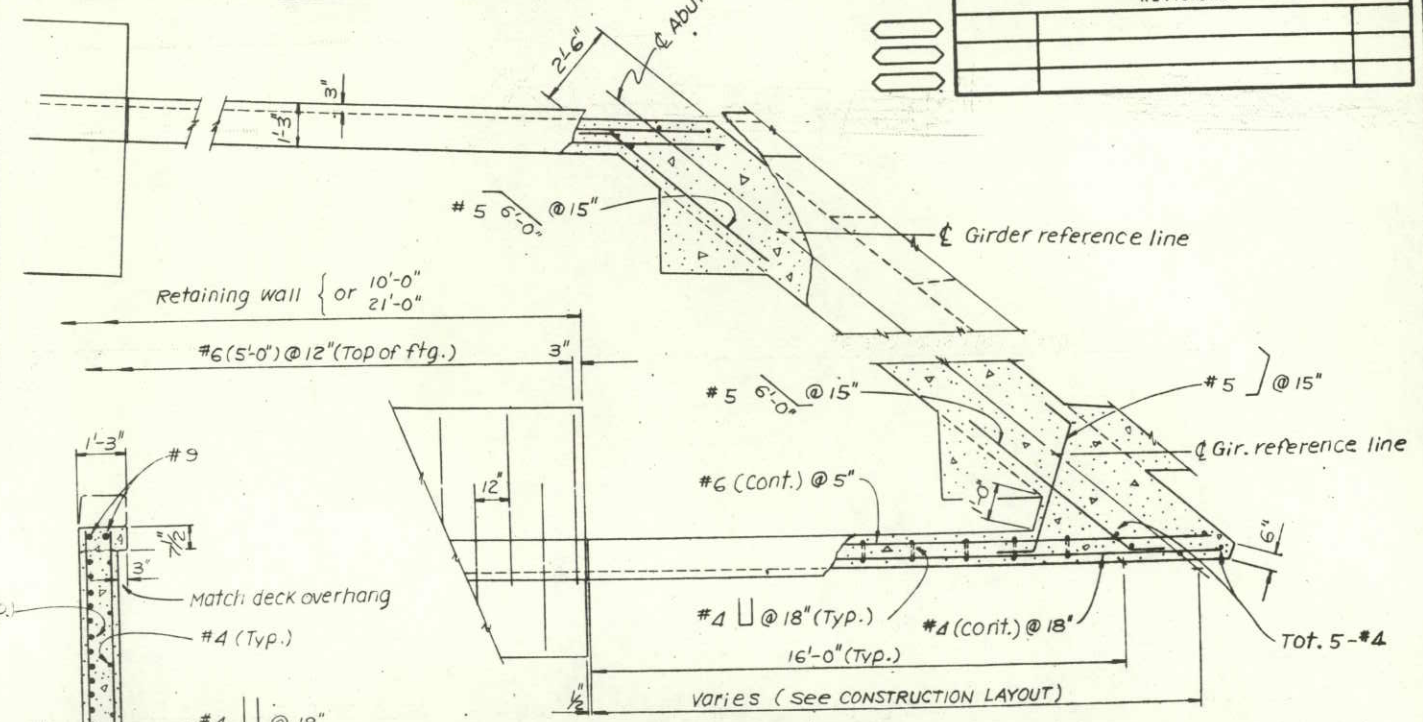

TYP. WINGS ~ PLAN

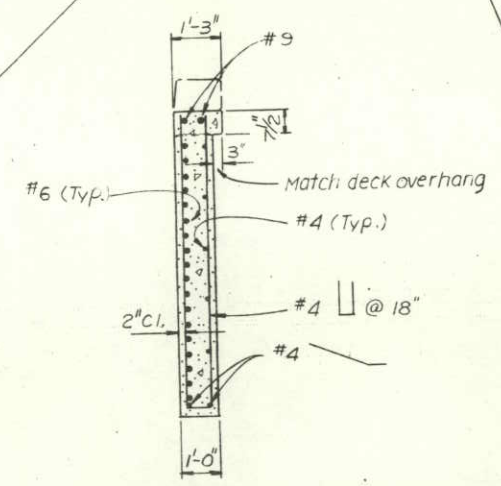

TYP. SECTION THRU WINGWALL

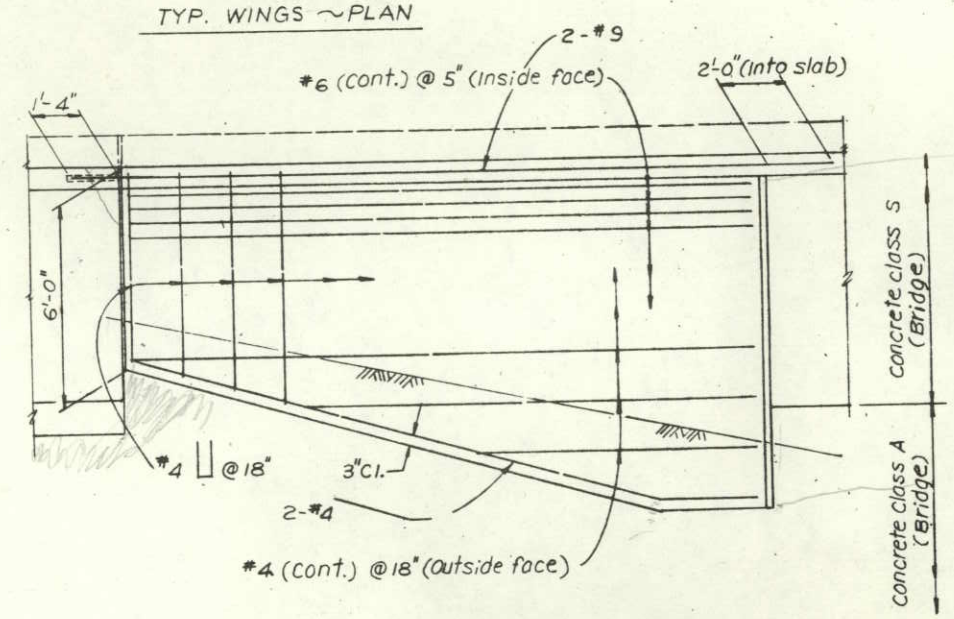

TYP. WING ~ ELEVATION

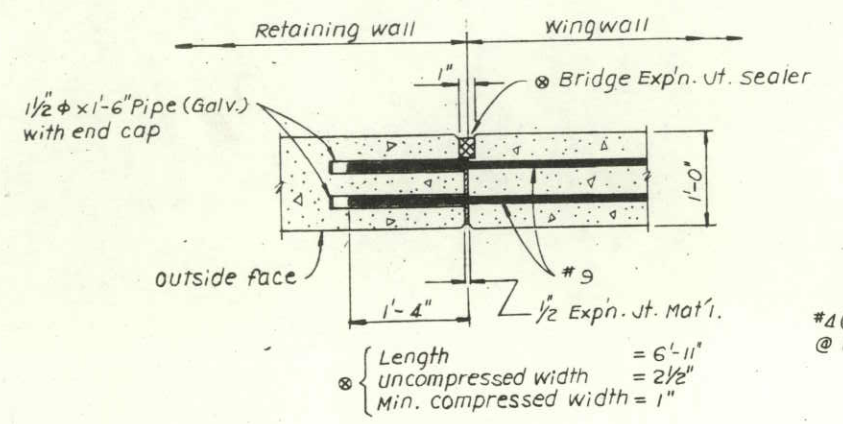

⊗ { Length = 6'-11"
uncompressed width = 2 1/2"
Min. compressed width = 1"

WINGWALL & RETAINING WALL JOINT DETAIL

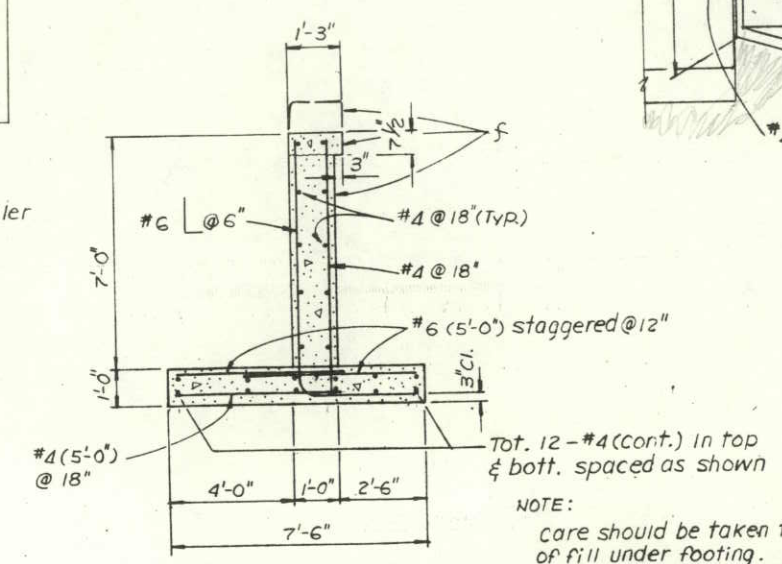

TYP. SECTION THRU RETAINING WALL

NOTE:
Care should be taken to insure compaction of fill under footing.
Footing pressure { Toe = 2.1 K.S.F.
Heel = 1.0 K.S.F.

INITIAL	DATE	CHECKED BY	DATE
DESIGNED BY M.L.M.	12-75	CHECKED BY E.H.H.	2-76
CHECKED BY R.R.A.	1-76	QUANTITIES BY K.D.H.	2-76
DETAILED BY A.I.T.	1-76	CHECKED BY K.D.H.	2-76

DIVISION OF HIGHWAYS

ABUTMENT DETAILS
WINGS AND RETAINING WALLS

Designer M. MCMULLEN		Structure Numbers	C-17-FA
Detailer A. TAKIGIKU			
Drawing Number B 9	of 18	Drawings	

Revision Dates (Preliminary Stage Only)

K&E 10 7100 2-75 MC 3486

STATE DEPARTMENT OF HIGHWAYS
DIVISION OF HIGHWAYS-STATE OF COLORADO
DGN FORM NO. 117
REV. JAN. 1970

AS CONSTRUCTED				
NO REVISIONS	7-7-77	REVISED		VOID

FEDERAL ROAD REGION NO.	DIVISION	PROJ. NO.	SHEET NO.	TOTAL SHEETS
VIII	COLORADO	RF 034-1(16)	25	

REVISIONS		

	INITIAL	DATE		
DESIGNED BY	M.L.M.	12-75	CHECKED BY	E.H.H. 2-76
CHECKED BY	R.R.A.	1-76	QUANTITIES BY	K.D.H. 2-76
DETAILED BY	A.T.	1-76	CHECKED BY	A.T. 2-76
				K.D.H. 2-76

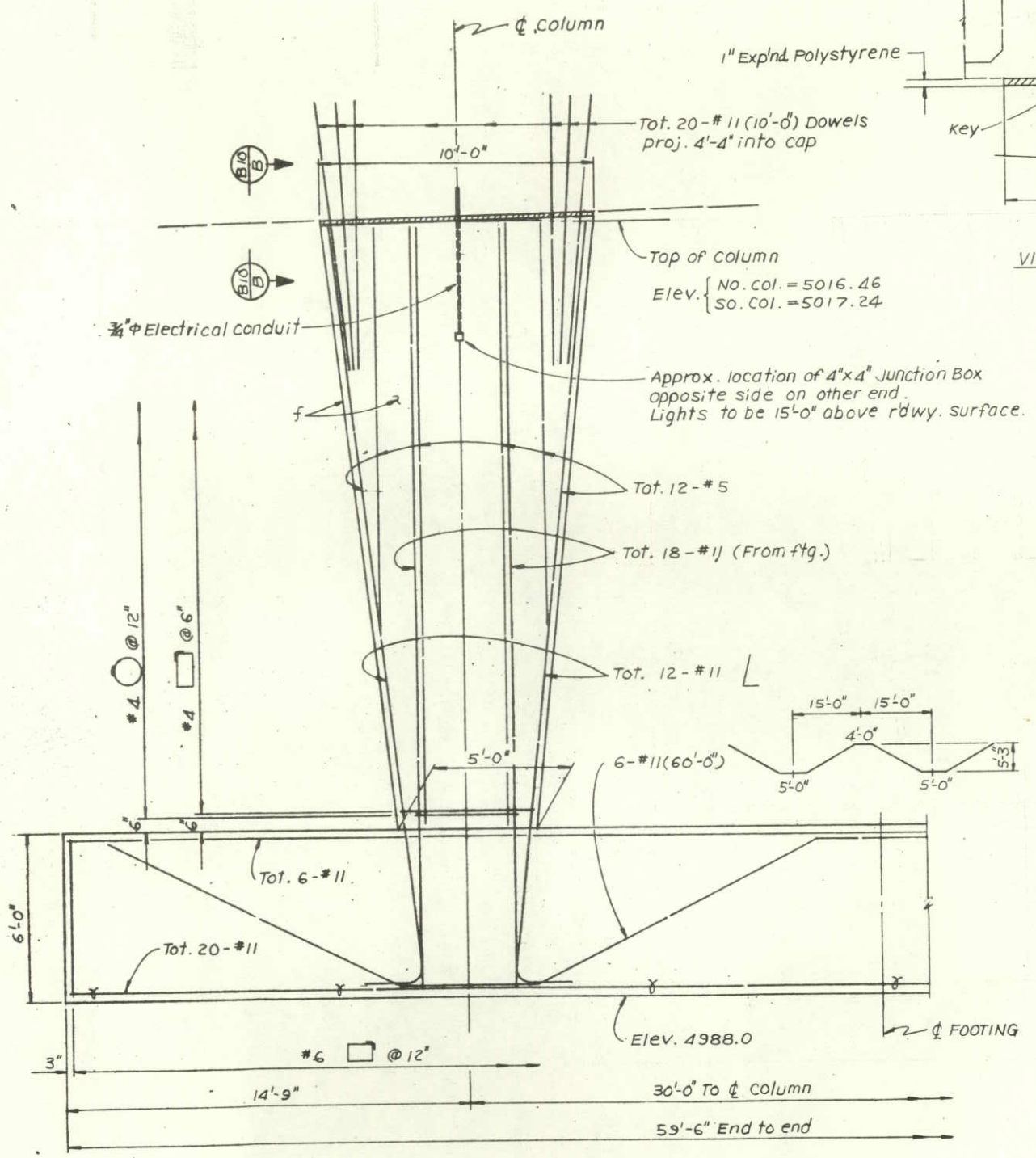

HALF PIER ~ ELEVATION

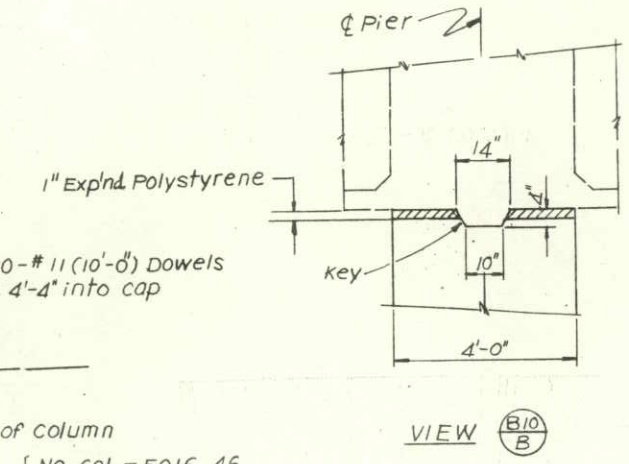

VIEW B10/B

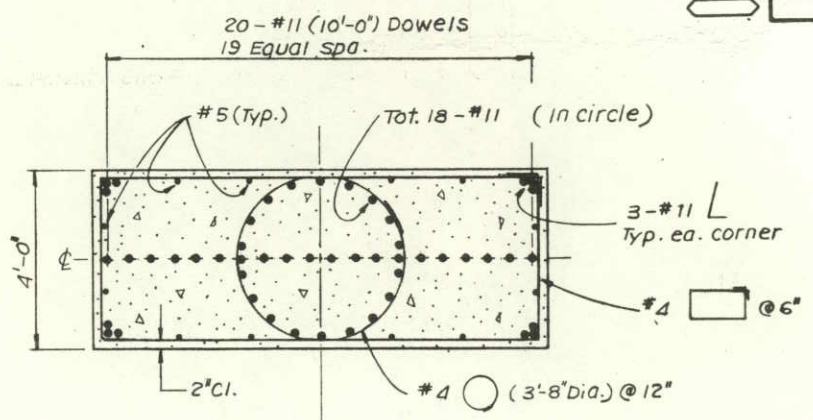

TYP. SECTION NEAR TOP OF COL.

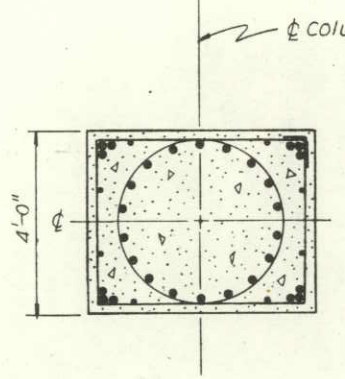

TYP. SECTION NEAR BOTTOM OF COL.

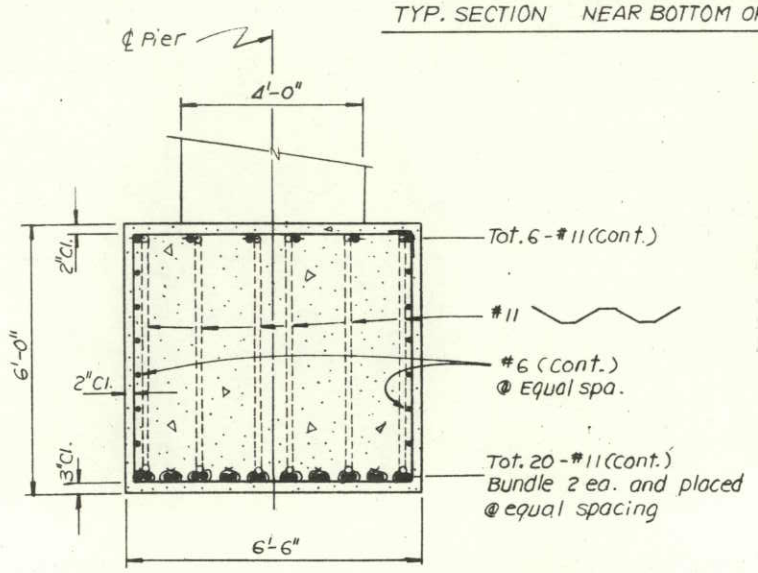

TYP. SECTION THRU FOOTING

DIVISION OF HIGHWAYS

PIER 2 DETAILS

Designer M. McMULLEN		Structure Numbers	C-17-FA
Detailer A. TAKIGIKU			
Drawing Number B 10	of 18	Drawings	

Revision Dates (Preliminary Stage Only)

K&E 10 7100 2-79 MC 3-052-

STATE DEPARTMENT OF HIGHWAYS
DIVISION OF HIGHWAYS-STATE OF COLORADO
DOH FORM NO. 117
REV. JAN. 1972

AS CONSTRUCTED			
NO REVISIONS	7-7-77	REVISED	VOID

FEDERAL ROAD REGION NO.	DIVISION	PROJ. NO.	SHEET NO.	TOTAL SHEETS
VIII	COLORADO	RF034-1(16)	26	

REVISIONS		

	INITIAL	DATE		
DESIGNED BY	M.L.M.	12-75	CHECKED BY	E.H.H. 2-76
CHECKED BY	R.R.A.	1-76	QUANTITIES BY	K.D.H. 2-76
DETAILED BY	A.I.T.	1-76	CHECKED BY	K.D.H. 2-76

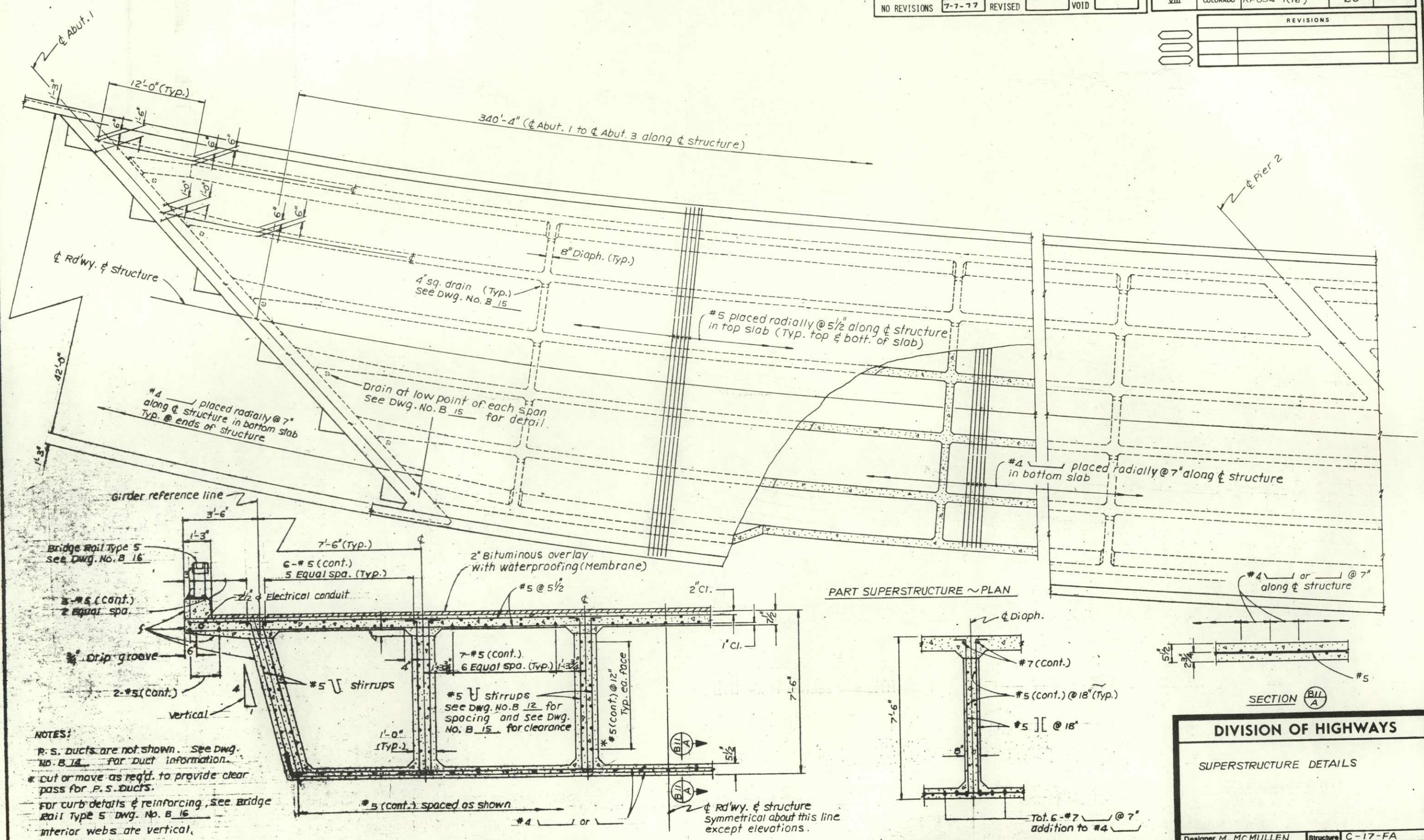

NOTES:

P.S. Ducts are not shown. See Dwg. No. B 14 for duct information.

* cut or move as reqd. to provide clear pass for P.S. Ducts.

For curb details & reinforcing, see Bridge Rail Type 5 Dwg. No. B 16

Interior webs are vertical.

DIVISION OF HIGHWAYS

SUPERSTRUCTURE DETAILS

Designer	M. MCMULLEN	Structure Numbers	C-17-FA
Detailer	A. TAKIGIKU		
Drawing Number B 11	of 18	Drawings	

Revision Dates (Preliminary Stage Only)

STATE DEPARTMENT OF HIGHWAYS
DIVISION OF HIGHWAYS-STATE OF COLORADO
DOH FORM NO. 117
REV. JAN. 1966

FEDERAL ROAD REGION NO.	DIVISION	PROJ. NO.	SHEET NO.	TOTAL SHEETS
VIII	COLORADO	RF034-1(16)	27	

REVISIONS

AS CONSTRUCTED
NO REVISIONS 7-7-77 REVISED VOID

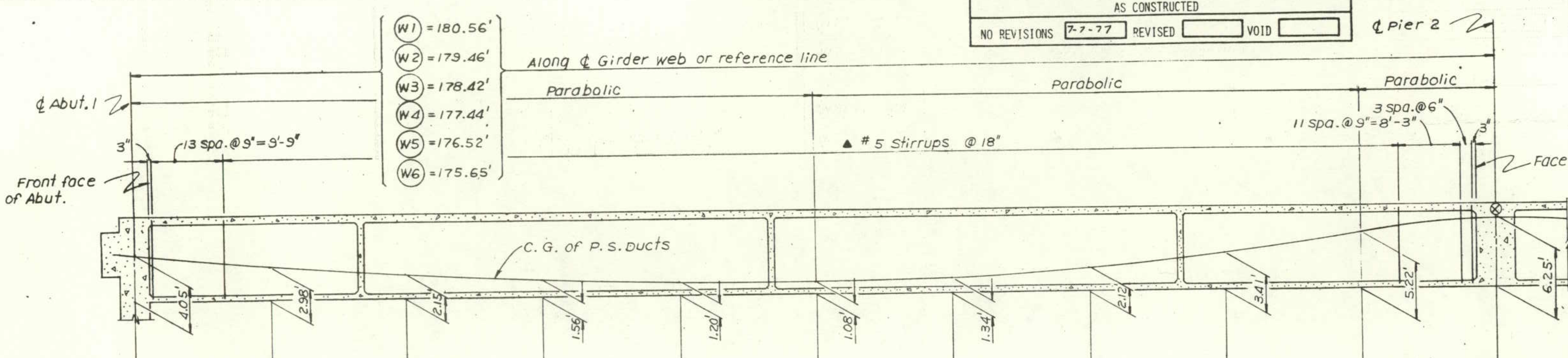

10 TH. POINTS	1.0	1.1	1.2	1.3	1.4	1.5	1.6	1.7	1.8	1.9	2.0
■ DEAD LOAD DEFLECTION IN FEET	0.000	0.093	0.175	0.229	0.254	0.246	0.210	0.161	0.104	0.049	0.000

▲ #5 Stirrups { ⊔ or ⊔ in flared portion; ⊔ or ⊔ in straight portion }

■ Long term, including effects of prestressing.

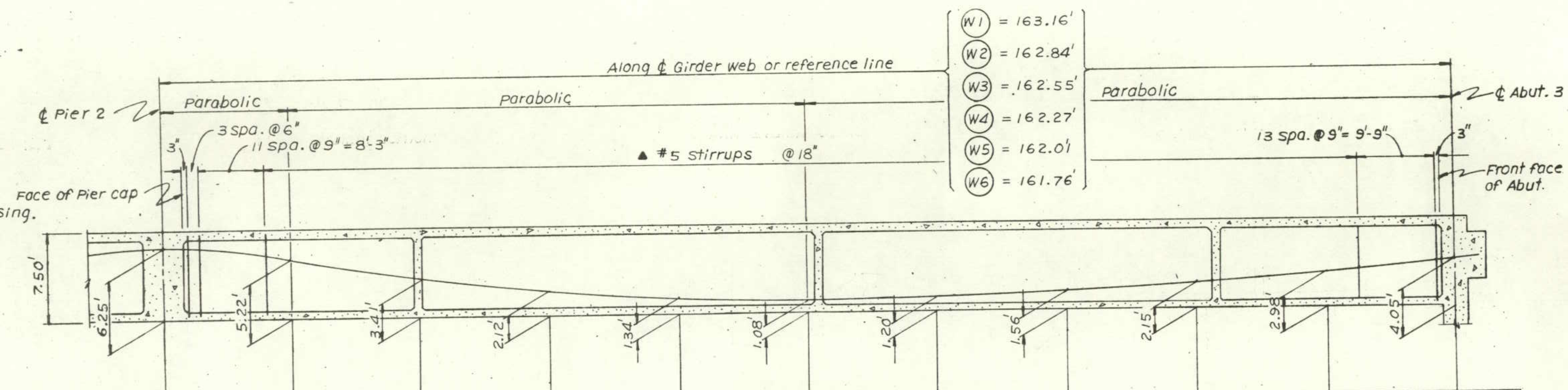

10 TH. POINTS	2.0	2.1	2.2	2.3	2.4	2.5	2.6	2.7	2.8	2.9	3.0
■ DEAD LOAD DEFLECTION IN FEET	0.000	-0.019	-0.022	-0.014	0.005	0.027	0.044	0.052	0.044	0.027	0.000

STRESSING NOTES:

JACKING FORCE (Pjack) = 13393 KIPS total at jacking ends, $AS = \frac{Pjack}{0.75 f's}$

CONCRETE: $F'c$ = 5000 psi at 28 days.
$F'ci$ = 4000 psi at time of stressing

GENERAL:

(1) Design is based on $\mu = 0.25$ and $K = 0.0002$. Pjack specified at the jacking ends include friction losses and provisions for an additional 32 ksi loss in stress.

(2) Tendon to be jacked to 0.75 f's and anchored at an equivalent anchor set = 5/8"

(3) Contractor to submit elongation and jacking calculations based on $\mu\alpha + KL = 0.1125$ (at pier) and initial stress at ℄ Pier 2 = 0.8875 times jacking stress.

(4) ⊗ Indicates point of minimum prestressing for two end stressing.

TENSIONING STEEL: At the contractors option the tensioning force may vary ±5% from the theoretical force per girder provided the total force is obtained and is distributed symmetrically about the ℄ of the typical section. One end stressing is permissible, if approximately 1/2 of the tendons (±10%) are stressed from each end.

TYP. GIRDER WEB ~ ELEVATION

	INITIAL	DATE			
DESIGNED BY	M.L.M	12-75	CHECKED BY	E.H.H	2-76
CHECKED BY	R.R.A	1-76	QUANTITIES BY	K.D.H	2-76
DETAILED BY	A.I.T	1-76	CHECKED BY	A.I.T	2-76
				K.D.H	2-76

DIVISION OF HIGHWAYS

SUPERSTRUCTURE DETAILS

Designer M. MCMULLEN
Detailer A. TAKIGIKU
Drawing Number B 12 of 18 Drawings
Structure Numbers C-17-FA

Revision Dates (Preliminary Stage Only)

STATE DEPARTMENT OF HIGHWAYS
DIVISION OF HIGHWAYS–STATE OF COLORADO

AS CONSTRUCTED		
NO REVISIONS 7-7-77	REVISED	VOID

FEDERAL ROAD REGION NO.	DIVISION	PROJ. NO.	SHEET NO.	TOTAL SHEETS
VIII	COLORADO	RF034-1(16)	28	

REVISIONS

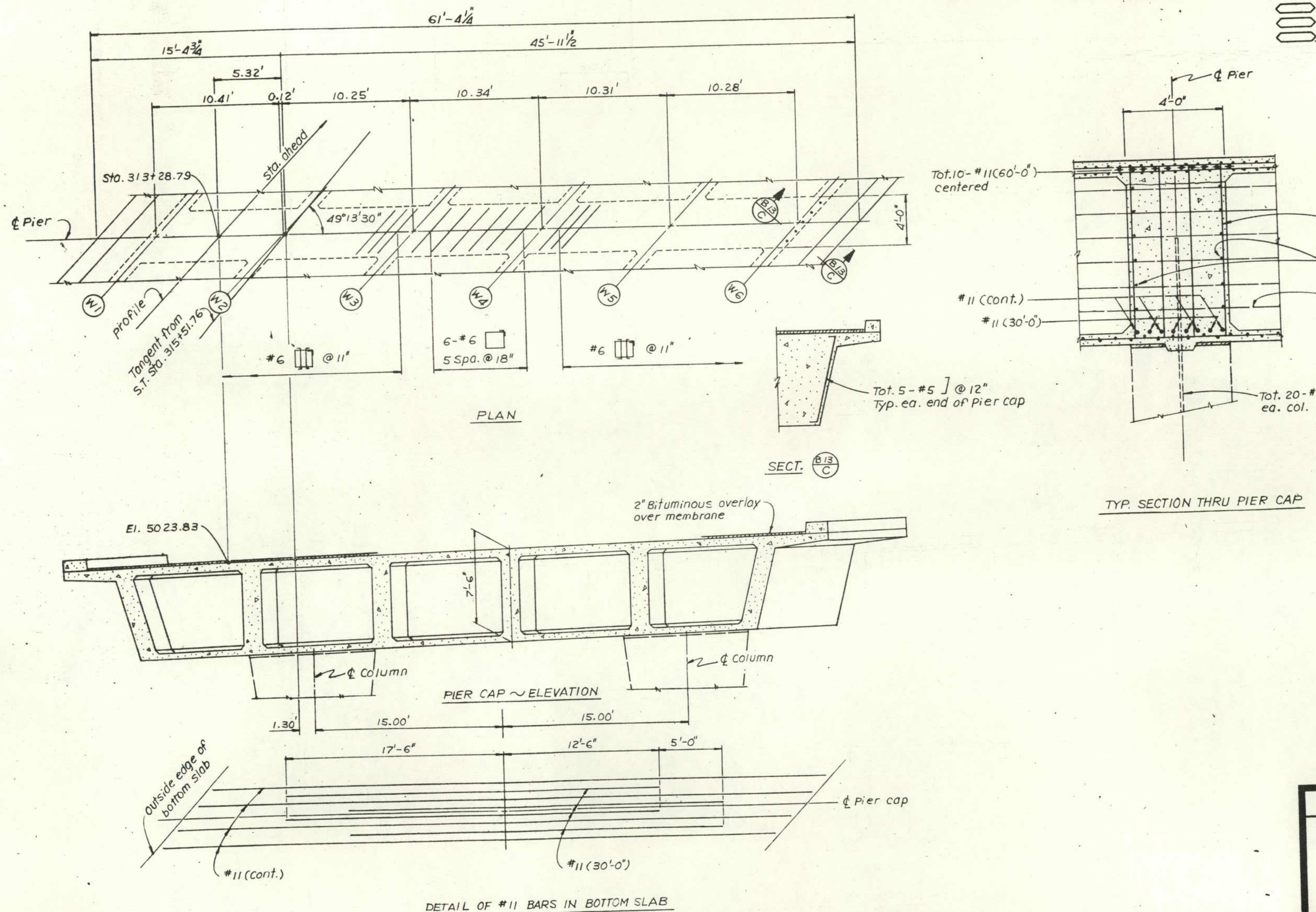

	INITIAL	DATE		
DESIGNED BY	MLM	12-75	CHECKED BY	EHH 2-76
CHECKED BY	RRA	1-76	QUANTITIES BY	KDH 2-76 / AIT 2-76
DETAILED BY	AIT	1-76	CHECKED BY	KDH 2-76

DIVISION OF HIGHWAYS

SUPERSTRUCTURE DETAILS

Designer	M. McMULLEN	Structure Numbers	C-17-FA
Detailer	A. TAKIGIKU		
Drawing Number B 13	of 18	Drawings	

Revision Dates (Preliminary Stage Only)

FEDERAL ROAD REGION NO.	DIVISION	PROJ. NO.	SHEET NO.	TOTAL SHEETS
VIII	COLORADO	RF034-1(16)	29	

REVISIONS

AS CONSTRUCTED		
NO REVISIONS 7-7-77	REVISED	VOID

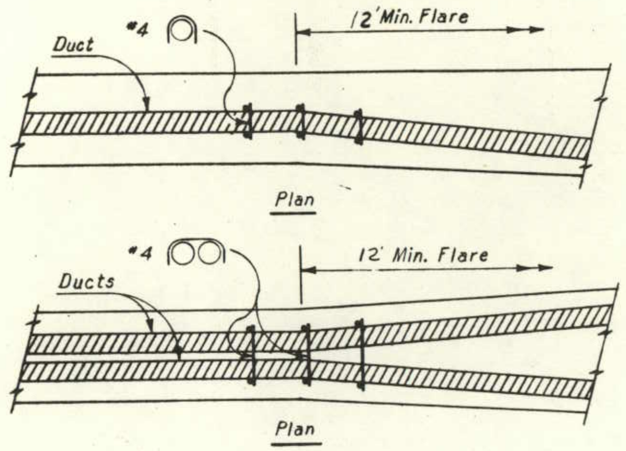

Provide #4 ties for each pair of ducts, or single duct, tie to Six stirrups at beginning of duct flare.

Additional Reinforcement At Flare Of Ducts

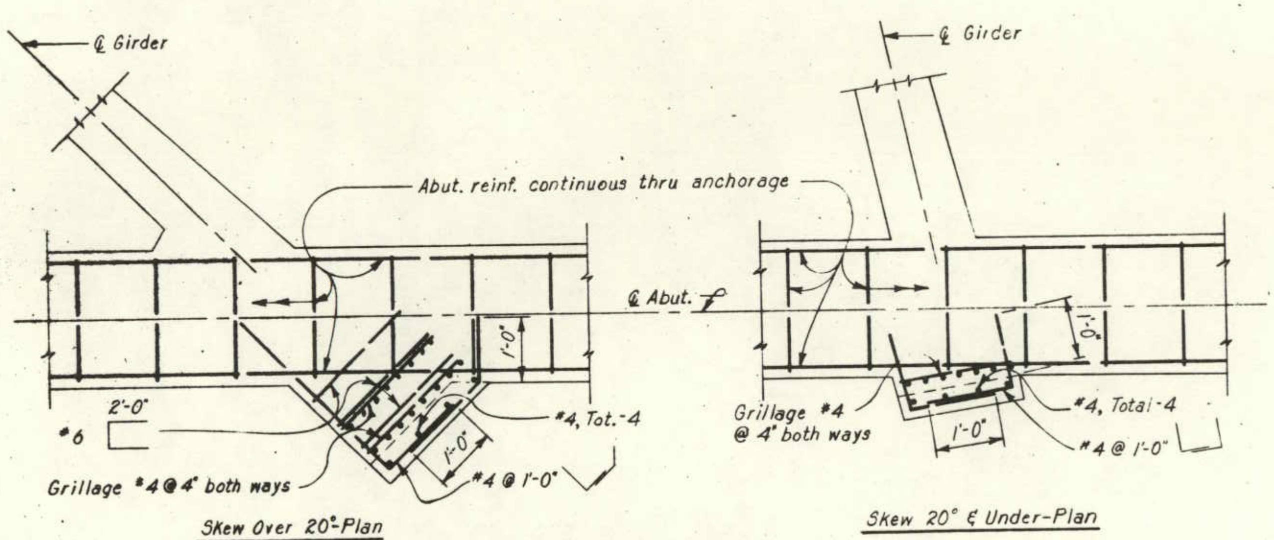

Bearing Seat For Prestressed Anchorage At Abutments

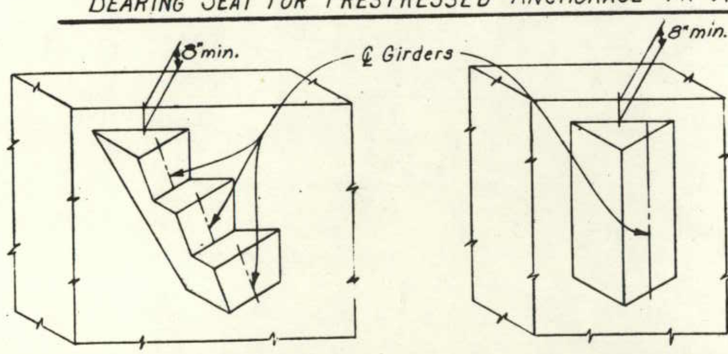

Typical Bearing Seat Illustrations

Details may be modified to suit specific anchorage.

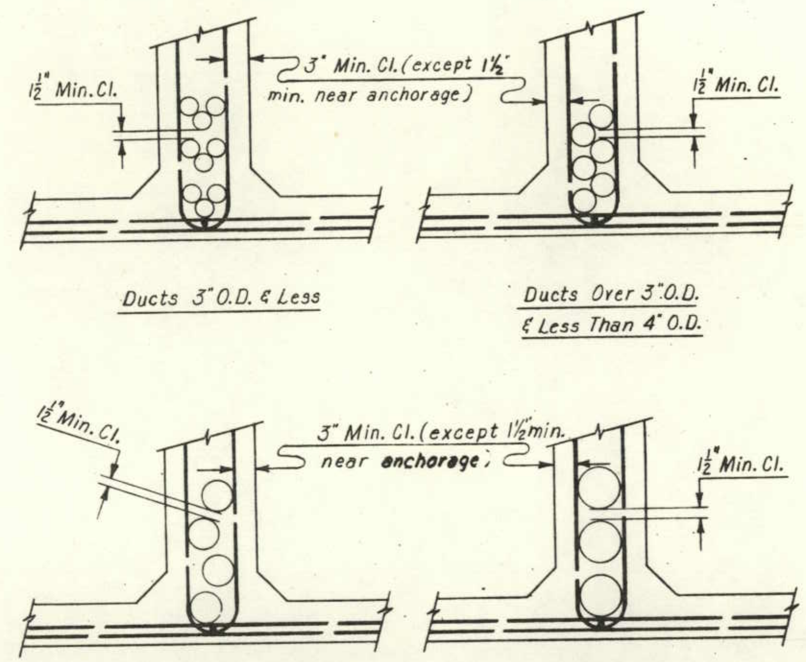

Clearance Requirements For Ducts

1. DUCT PATTERNS SHOWN ARE FOR A 12" WIDE GIRDER STEM: FOR OTHER WIDTHS THE MINIMUM CLEARANCES MUST BE MAINTAINED.
2. GIRDER STIRRUPS MUST BE BENT TO FIT THE DUCT SIZE USED, OR ⊔⊔ STIRRUPS MAY BE USED.
3. APPROVAL OF THE ENGINEER IS REQUIRED FOR DEVIATIONS.

NOTES:

RECESS FOR ANCHORAGE TO BE FILLED WITH CONCRETE TO PROVIDE A MINIMUM OF 1 1/2" COVER.

EDGE DISTANCE OF BEARING PLATES SHALL BE 1 1/2" MINIMUM.

DISTRIBUTION OF PRESTRESSING FORCE:

AT THE CONTRACTOR'S OPTION THE PRESTRESSING FORCE MAY VARY 5% FROM THE THEORETICAL FORCE PER GIRDER PROVIDED THE TOTAL FORCE IS OBTAINED AND IS DISTRIBUTED SYM. ABOUT THE CENTERLINE OF THE TYPICAL SECTION.

STRESSING SEQUENCE:

NO MORE THAN 1/2 OF THE PRESTRESSING FORCE IN ANY GIRDER MAY BE STRESSED BEFORE AN EQUAL FORCE IS STRESSED IN THE ADJACENT GIRDERS. AT NO TIME DURING THE STRESSSING OPERATIONS WILL MORE THAN 1/6 OF THE TOTAL PRESTRESSING FORCE BE APPLIED ECCENTRICALLY ABOUT THE CENTERLINE OF THE STRUCTURE.

GIRDER STEM SHALL BE FLARED NEAR ANCHORAGE TO PROVIDE A MINIMUM OF 1 1/2" CONCRETE COVERING THE DUCTS, FLARE MAY BE ON ONE SIDE OF GIRDER ONLY.

BAR REINFORCEMENT INTERFERING WITH THE PRESTRESSING TENDON ALIGNMENT SHALL BE ADJUSTED, AS APPROVED BY THE ENGINEER.

INITIAL	DATE	
DESIGNED BY		CHECKED BY
CHECKED BY		QUANTITIES BY
DETAILED BY	R.L.K. 5-74	CHECKED BY

DIVISION OF HIGHWAYS

CAST IN PLACE
PRESTRESSED GIRDER DETAILS

Designer M. McMullen — Structure Numbers C-17-FA
Detailer R.L. Kilpatrick
Drawing Number B 14 of 18 Drawings

Revision Dates (Preliminary Stage Only)

(12-1-74)

STATE DEPARTMENT OF HIGHWAYS
DIVISION OF HIGHWAYS - STATE OF COLORADO
DOH FORM NO. 117
REV. OCTOBER 1970

STATE DEPARTMENT OF HIGHWAYS
DIVISION OF HIGHWAYS — STATE OF COLORADO
DOH FORM NO. 117
JULY 1966

AS CONSTRUCTED			
NO REVISIONS	7-7-77	REVISED	VOID

FEDERAL ROAD REGION NO.	DIVISION	PROJ. NO.	SHEET NO.	TOTAL SHEETS
VIII	COLORADO	RF034-1(16)	30	

REVISIONS		

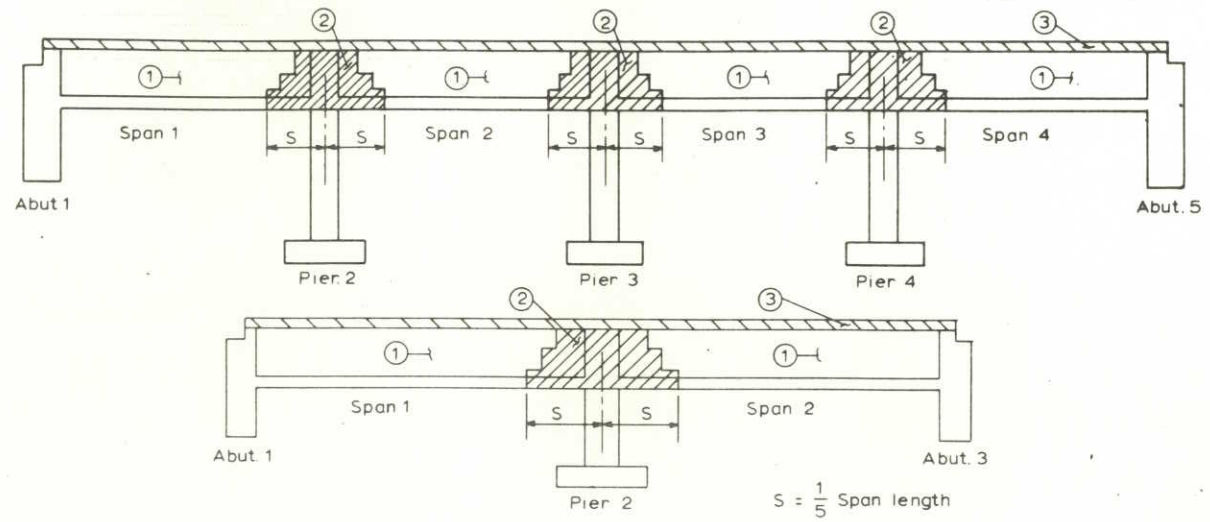

BOX GIRDER SUPERSTRUCTURE PLACING SCHEDULE

Note: Numbers ① and ② indicate sequence of placing bottom slab and girder web concrete when each section constitutes a separate pour. Any combination of ① and ② sections may be placed in one continuous pour. Top slab concrete ③ shall be placed separately from ① and ②. ③ may be placed continuously or in parts, as approved by the Engineer, providing no transverse construction joints fall within the ② areas. Any deviation from the above must be approved by the Engineer.

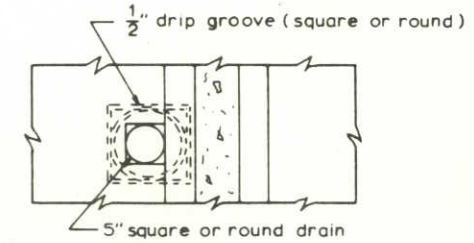

PLAN

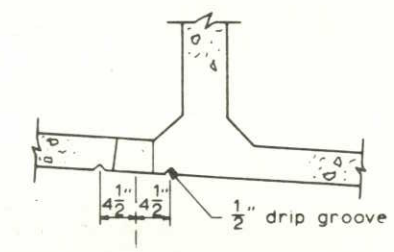

ELEVATION

BOTTOM SLAB DRAIN DETAIL

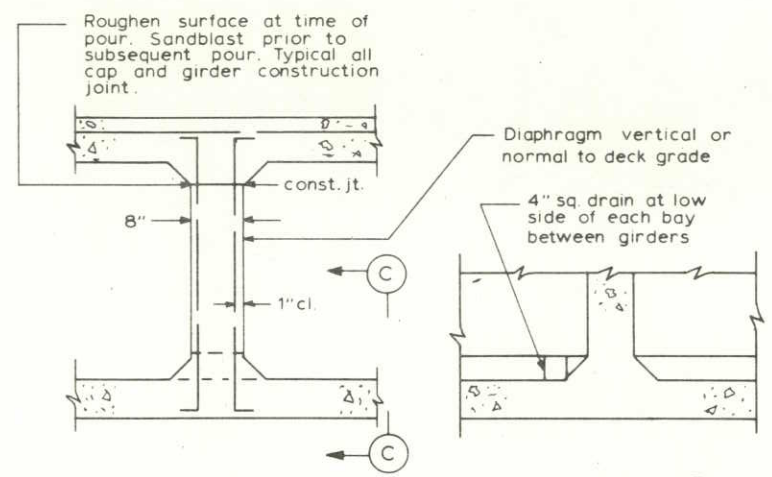

ELEVATION

SECTION C

INTERMEDIATE DIAPHRAGM SECTION

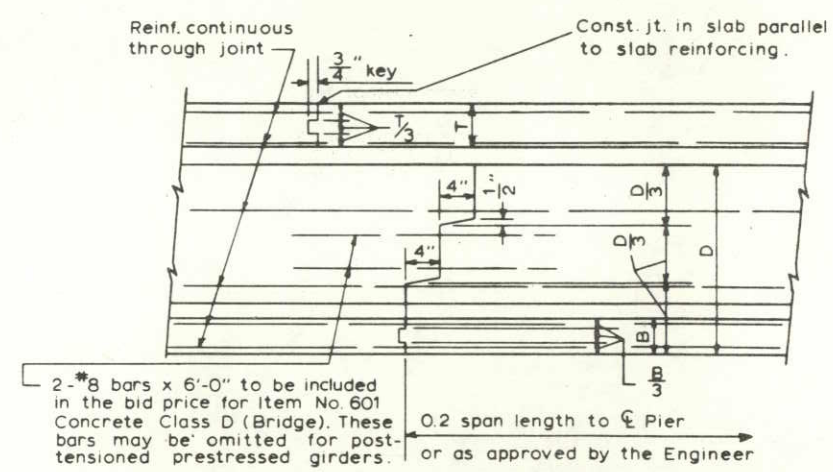

TRANSVERSE GIRDER CONSTRUCTION JOINT

T = Top slab thickness
B = Bottom slab thickness

DIVISION OF HIGHWAYS		
BOX GIRDER DETAILS		
	Designer: M. MCMULLEN	Detailer: A. TAKIGIKU
	Structure Numbers	C-17-FA
	DWG. No. B 15 OF 18	

(7-1-74)

Revision Dates (Preliminary Stage Only)

DESIGNED BY | CHECKED BY | DETAILED BY | QUANTITIES BY | CHECKED BY | CHECKED BY

STATE DEPARTMENT OF HIGHWAYS
DIVISION OF HIGHWAYS — STATE OF COLORADO
DOH FORM NO. 117
JULY 1960

AS CONSTRUCTED			
NO REVISIONS		REVISED	VOID

BRIDGE STANDARD -11-

FEDERAL ROAD REGION NO.	DIVISION	PROJ. NO.	SHEET NO.	TOTAL SHEETS
VIII	COLORADO	RF034-1(16)	31	

REVISIONS		

NOTES:

1. POSTS SHALL BE PERPENDICULAR TO THE GRADE OF THE DECK.
2. RAIL SHALL BE CONTINUOUS OVER NOT LESS THAN TWO (2) POSTS.
3. "A" SHALL BE THE SAME DIMENSION AS THE OPENING IN THE SLAB AT THE EXPANSION DEVICE.
4. ALL EXPOSED CORNERS SHALL BE GROUND SMOOTH.
5. GALVANIZE RAIL ASSEMBLY AFTER FABRICATION.
6. POST SPACING RAIL SHALL BE EQUAL WHEN POSSIBLE.
7. TUBING SHALL BE SHOP BENT OR FABRICATED TO FIT HORIZONTAL CURVE WHEN THE RADIUS IS LESS THAN 1500 FEET.

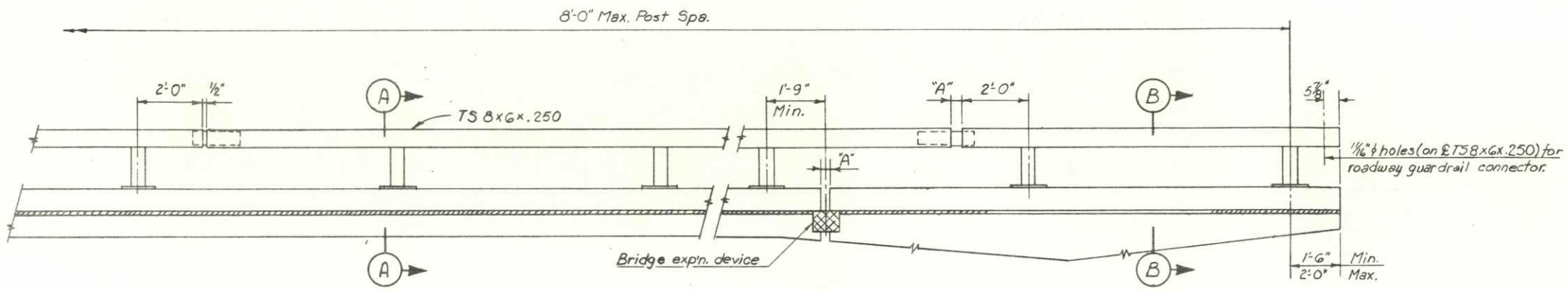

RAIL PANEL @ SPLICE — RAIL PANEL @ EXP'N. DEVICE — RAIL PANEL @ END OF WING

ELEVATION BRIDGE RAIL

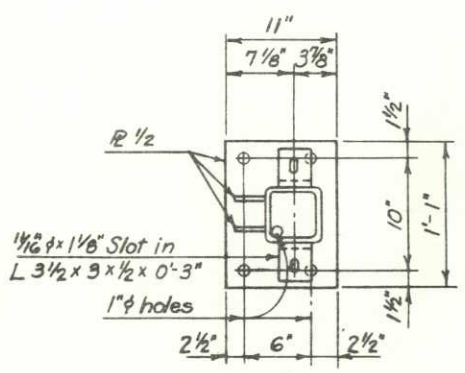

PLAN

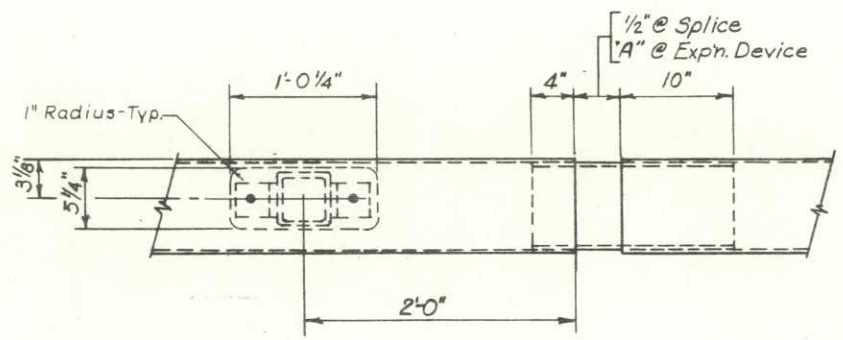

PLAN

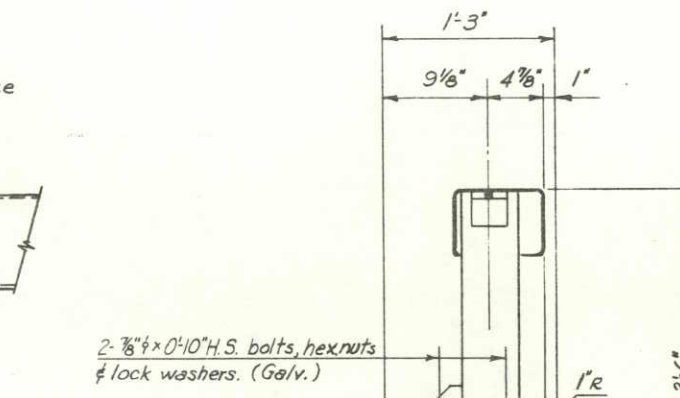

PLAN

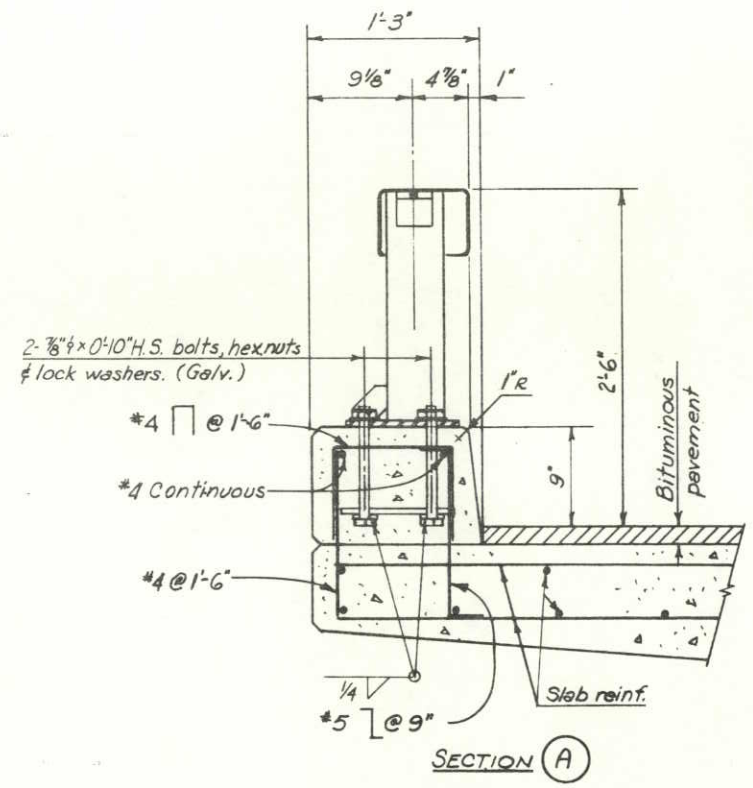

SECTION (A)

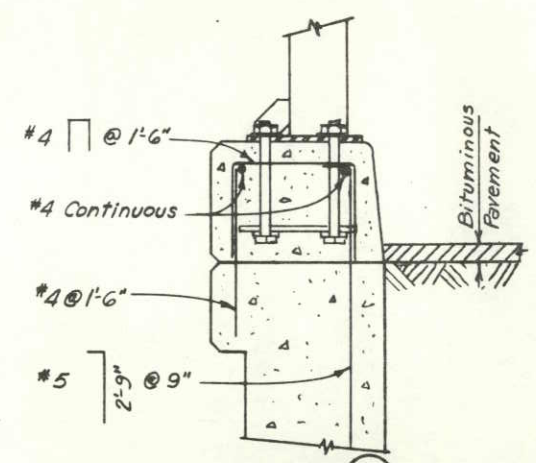

SECTION (B)

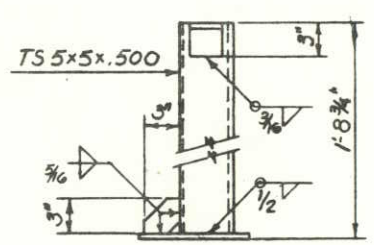

ELEVATION

POST DETAIL

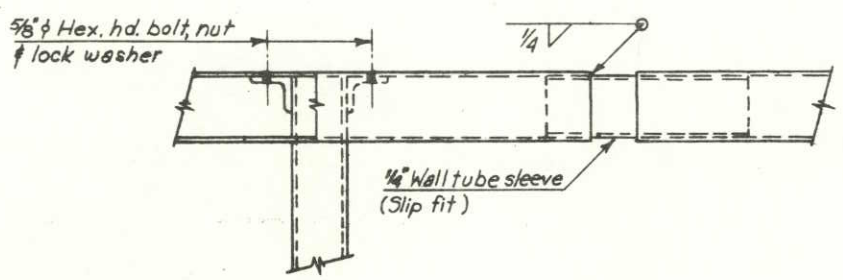

ELEVATION

POST CONNECTION

ELEVATION

SPLICE & EXP'N. DETAIL

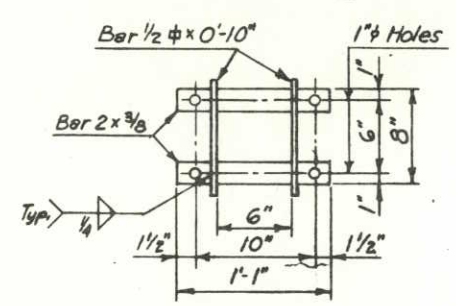

ANCHOR DETAIL

DIVISION OF HIGHWAYS

BRIDGE RAIL TYPE 5

Designer S. CHOWDHURY		Structure Numbers	C-17-FA
Detailer J.R. EWERT			
Drawing Number B 16	of 18	Drawings	

(12-17-75)

Revision Dates (Preliminary Stage Only)

DESIGNED BY	CHECKED BY	DETAILED BY	CHECKED AT	DATE	QUANTITIES BY	CHECKED BY
		JRE		5-70		8-73

STATE DEPARTMENT OF HIGHWAYS
DIVISION OF HIGHWAYS—STATE OF COLORADO
DOH FORM NO. 112
REV. OCTOBER 1975

AS CONSTRUCTED		
NO REVISIONS	REVISED	VOID

FEDERAL ROAD REGION NO.	DIVISION	PROJ. NO.	SHEET NO.	TOTAL SHEETS
VIII	COLORADO	RFO34-1(16)	32	

REVISIONS

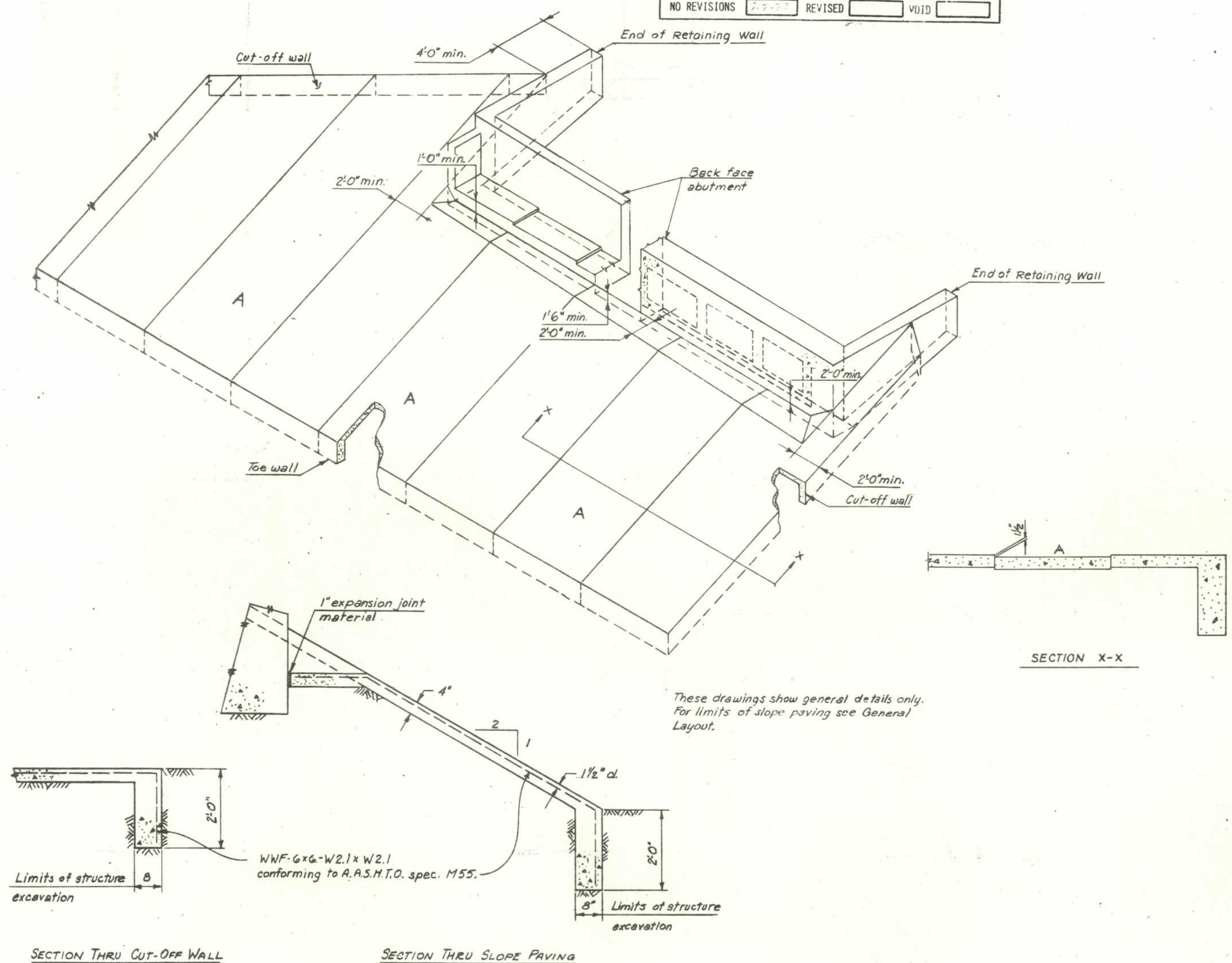

These drawings show general details only. For limits of slope paving see General Layout.

NOTES

SLOPE PAVING SHALL BE POURED IN 5-FT. TRANSVERSE SECTIONS WITH A TOOLED CONSTRUCTION JOINT AT EACH SECTION.

WIRE FABRIC SHALL BE 2" FROM THE END OF JOINTS AND SHALL LAP 8" AT SPLICES.

WHERE SLOPE OR BERM PAVING BUTTS AGAINST STRUCTURAL CONCRETE, SEPARATE WITH 1" EXPANSION JOINT MATERIAL.

EXPANSION JOINT MATERIAL AND WELDED WIRE FABRIC SHALL NOT BE PAID FOR SEPARATELY BUT SHALL BE INCLUDED IN THE WORK.

PANELS MARKED THUS, "A", ARE TO RECEIVE AN EXPOSED AGGREGATE FINISH. AFTER THE CONCRETE IS STRUCK TO GRADE, THE SURFACE SHALL BE SPRAYED WITH AN APPROVED RETARDER. THE AMOUNT OF RETARDER SPRAYED ON THE SURFACE SHALL BE AS RECOMMENDED BY THE MANUFACTURER.

IN ALL CASES, THE EXPOSED AGGREGATE FINISH SHALL BE STARTED ON THE FIRST PANEL FACING ON-COMING TRAFFIC.

THE CONCRETE SHALL THEN BE ALLOWED TO SET, SETTING TIME SHALL BE DETERMINED BY THE ENGINEER. AFTER SETTING THE PRESCRIBED TIME, THE SURFACE SHALL BE BROOMED AND WASHED WITH WATER TO EXPOSE THE AGGREGATE.

THE EXPOSED AGGREGATE FINISH SHALL THEN BE SPRAYED WITH A CLEAR CURING COMPOUND.

COARSE AGGREGATE USED IN EXPOSED AGGREGATE PANELS SHALL BE EXPOSED PREDOMINANTLY OF STONE CONTRASTING IN COLOR TO THAT OF CONCRETE IN ADJACENT PANELS.

~~COARSE AGGREGATE SHALL MEET THE REQUIREMENTS OF AASHTO DESIGNATION M 43 SIZE NUMBER 6.~~

DIVISION OF HIGHWAYS

SLOPE PAVING DETAILS

Designer	M. McMULLEN	Structure Numbers	C-17-FA
Detailer	J.R. Ewert		
Drawing Number B	17	of	18 Drawings

Revision Dates (Preliminary Stage Only)

(9-1-74)

DESIGNED BY		CHECKED BY	
CHECKED BY		QUANTITIES BY	
DETAILED BY	JRE	CHECKED BY	6-74

AS CONSTRUCTED			
NO REVISIONS	7-7-77	REVISED	VOID

FEDERAL ROAD REGION NO.	DIVISION	PROJ. NO.	SHEET NO.	TOTAL SHEETS
VIII	COLORADO	RF034-1(16)	53	

REVISIONS		

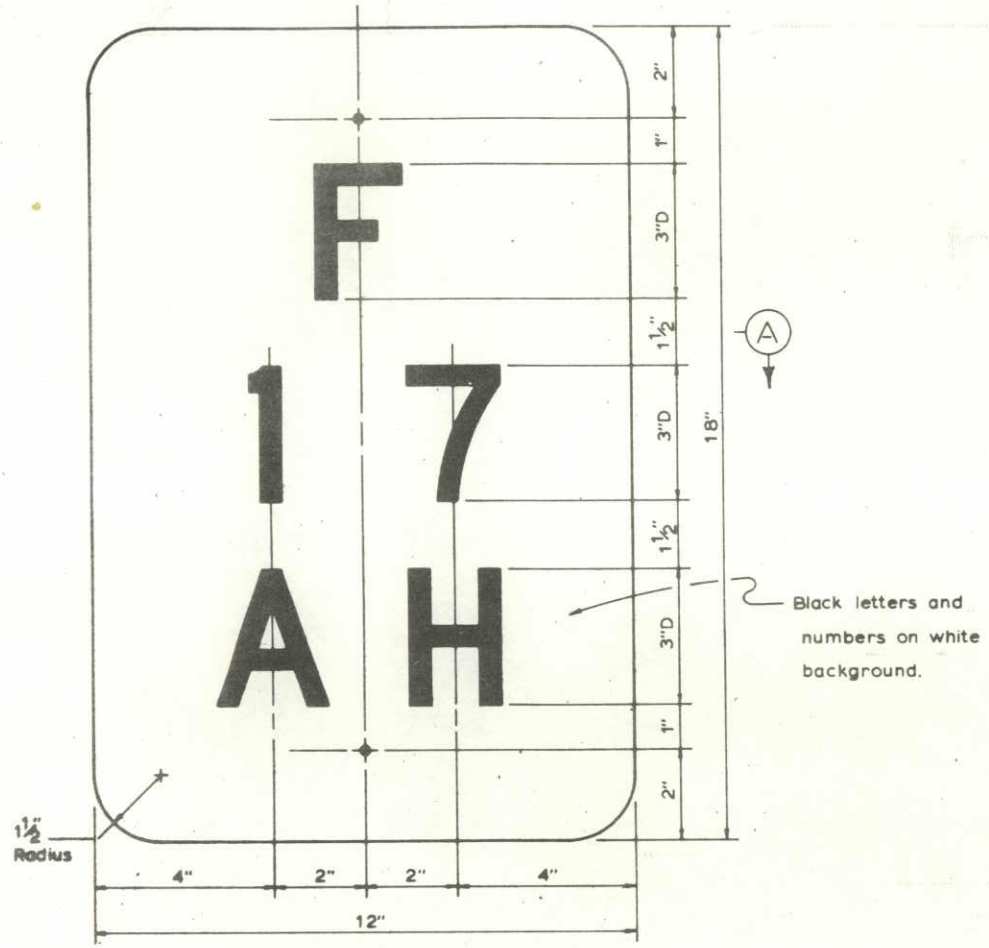

STRUCTURE IDENTIFICATION PANEL
(SAMPLE NUMBERS & LETTERS)

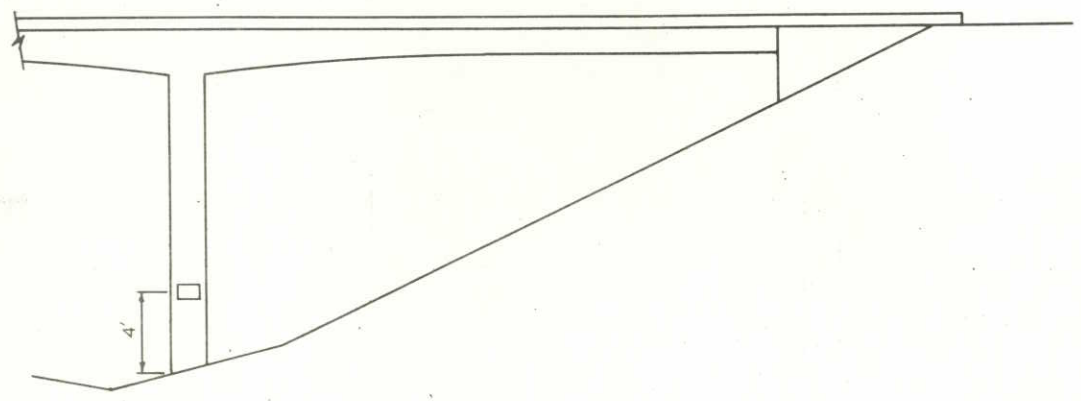

STRUCTURE NUMBER LOCATION ON PIERS

ALL WORK SHALL BE DONE IN ACCORDANCE WITH THE STANDARD SPECIFICATIONS APPLICABLE TO THE PROJECT.

SIGN PANEL SHALL BE FABRICATED FROM EITHER SHEET STEEL 0.0598 MIN. THICKNESS OR SHEET ALUMINUM 0.080 MIN. THICKNESS.

SIGN PANEL SHALL BE GROUND MOUNTED.

U-2 POST SHALL MEET REQUIREMENTS OF PAR. 4.5 U.S. DEPT. OF COMMERCE, COMMERCIAL STANDARD 184-51. ACCEPTABLE MATERIAL INCLUDES REROLLED RAILROAD RAILS. U-2 POST SHALL WEIGH 2 LBS. PER FT. EXCEPT THAT A MILL TOLERANCE OF MINUS 3-1/2% OF THE WEIGHT OF ANY ONE POST WILL BE ALLOWED. ALTERNATE METAL POST WILL BE ACCEPTABLE IF SECTION MODULUS IS AT LEAST 0.200 IN.^{3} ABOUT THE X-X AXIS AND AT LEAST 0.250 IN.^{3} ABOUT THE Y-Y AXIS.

SIGN PANEL SHALL BE FASTENED DIRECTLY TO THE POST WITH TWO 1/4" GALVANIZED OR CADMIUM PLATED STOVE BOLTS. A PLASTIC FIBER WASHER SHALL BE PLACED BETWEEN THE BOLTS HEAD AND THE FACE OF THE PANEL. A GALVANIZED OR CADMIUM PLATED LOCK WASHER SHALL BE PLACED UNDER THE NUT ON THE BACK OF THE POST. EXPOSED BOLT HEADS AND FIBER WASHERS ON THE FACE OF THE SIGN PANEL SHALL BE PAINTED TO MATCH THE SURROUNDING COLOR.

LETTERS AND NUMBERS SHALL BE SERIES "D". THEY SHALL BE 3" HIGH.

THE CORRECT STRUCTURE NUMBER IS SHOWN ON THE PLANS.

(1) OMIT STRUCTURE NUMBER STANDARDS WHERE A RAILROAD TRACK CROSSES OVER THE ROADWAY.

STRUCTURE NUMBER STANDARD SHALL NOT BE PAID FOR SEPARATELY BUT INCLUDED IN THE WORK.

IN ADDITION TO THE REQUIREMENTS STATED ABOVE, STRUCTURE NUMBERS FOR HIGHWAYS PASSING UNDER CROSSROADS ARE TO BE PLACED AT THE FOLLOWING POINTS:

(A) FOR STRUCTURES OF THREE OR MORE SPANS, THE STRUCTURE NUMBER SHALL BE STENCILED, FACING TRAFFIC, ON THE OUTSIDE FACE OF THE END COLUMN OF THE RIGHT HAND PIER.

(B) FOR TWO SPAN STRUCTURES, THE STRUCTURE NUMBER SHALL BE STENCILED, FACING TRAFFIC, ON THE OUTSIDE FACE OF EACH END COLUMN OF THE CENTER PIER.

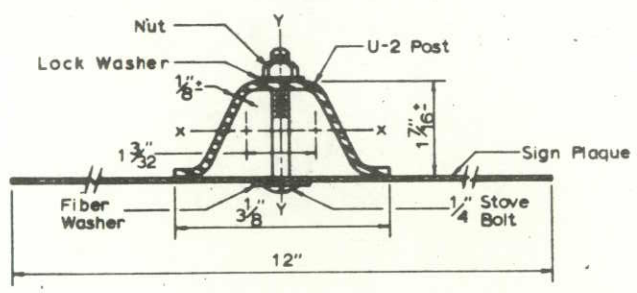

SECTION (A)

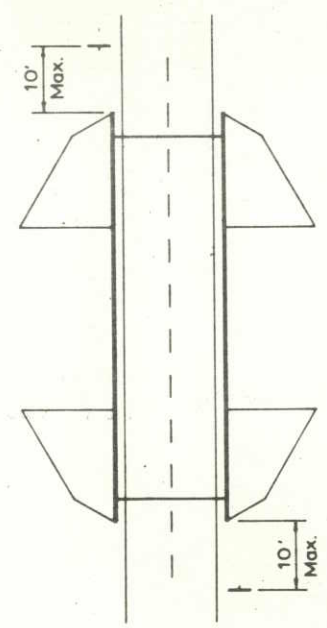

(1) STANDARD LOCATION DETAIL

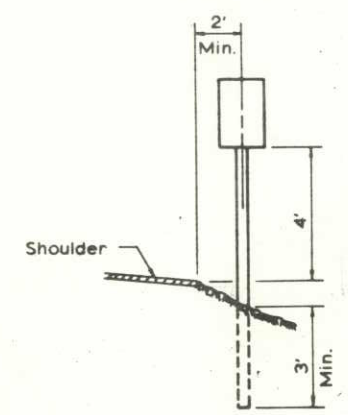

U-2 POST IN GROUND

DIVISION OF HIGHWAYS

STRUCTURE NUMBER STANDARD

Designer	M. McMULLEN	Structure Numbers	C-17-FA
Detailer	B.R. LEGE		
Drawing Number B 18	of 18	Drawings	

(7-1-74)

Revision Dates				(Preliminary Stage Only)			

AS CONSTRUCTED
NO REVISIONS ☐ REVISED 7-7-77 VOID ☐

FEDERAL ROAD REGION NO.	DIVISION	PROJ. NO.	SHEET NO.	TOTAL SHEETS
VIII	COLORADO	RF 034-1 (16)	34	

(RED) 4-14-76, C.K.M. – Added Road Approach

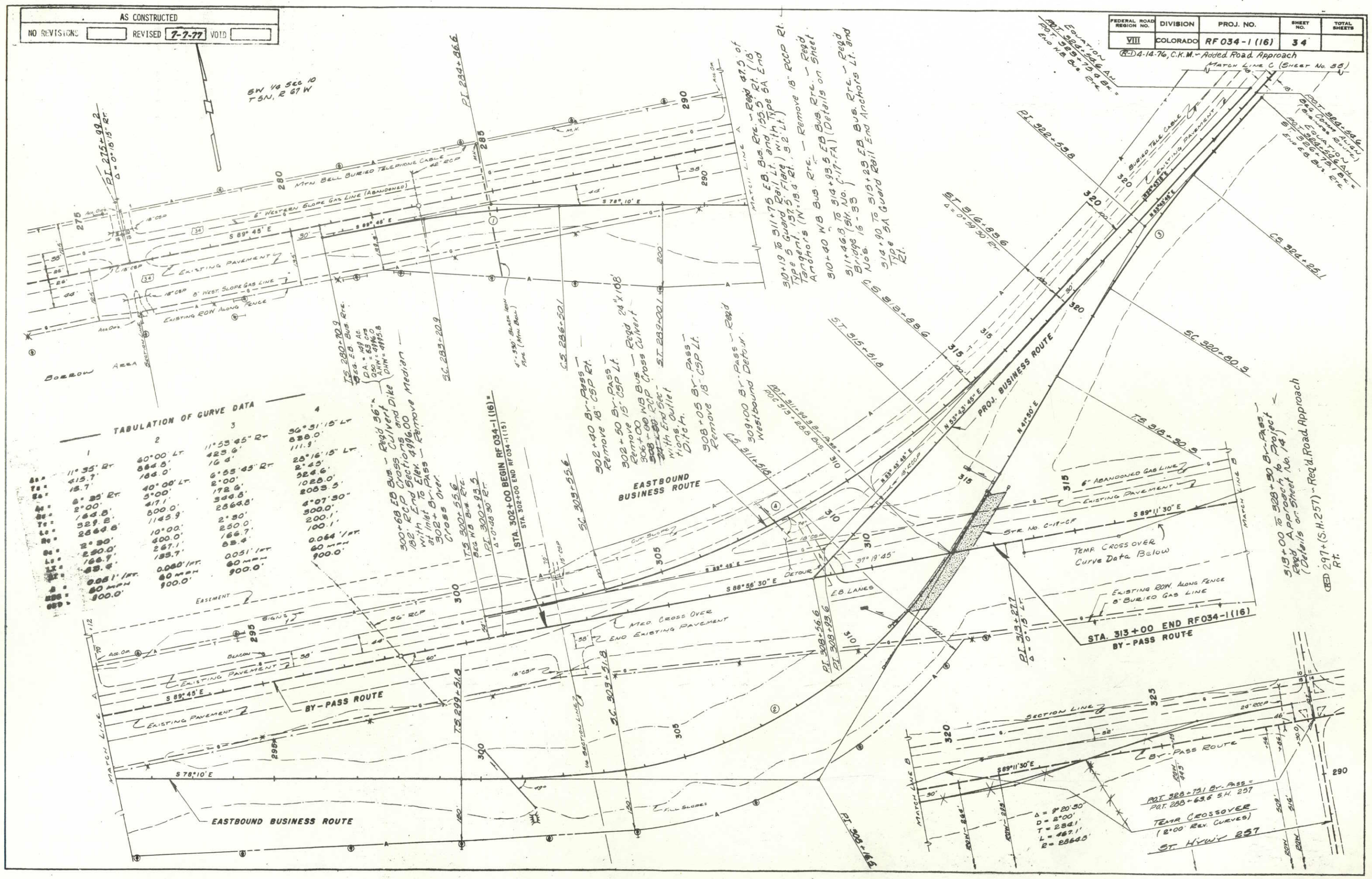

ON OF HIGHWAYS, STATE OF COLORADO
H. FORM NO. 126
MARCH, 1974

AS CONSTRUCTED
NO REVISIONS ____ REVISED 7-7-77 VOID ____

FEDERAL ROAD REGION NO.	DIVISION	PROJ. NO.	SHEET NO.	TOTAL SHEETS
VIII	COLORADO	RF 034-1(16)	35	

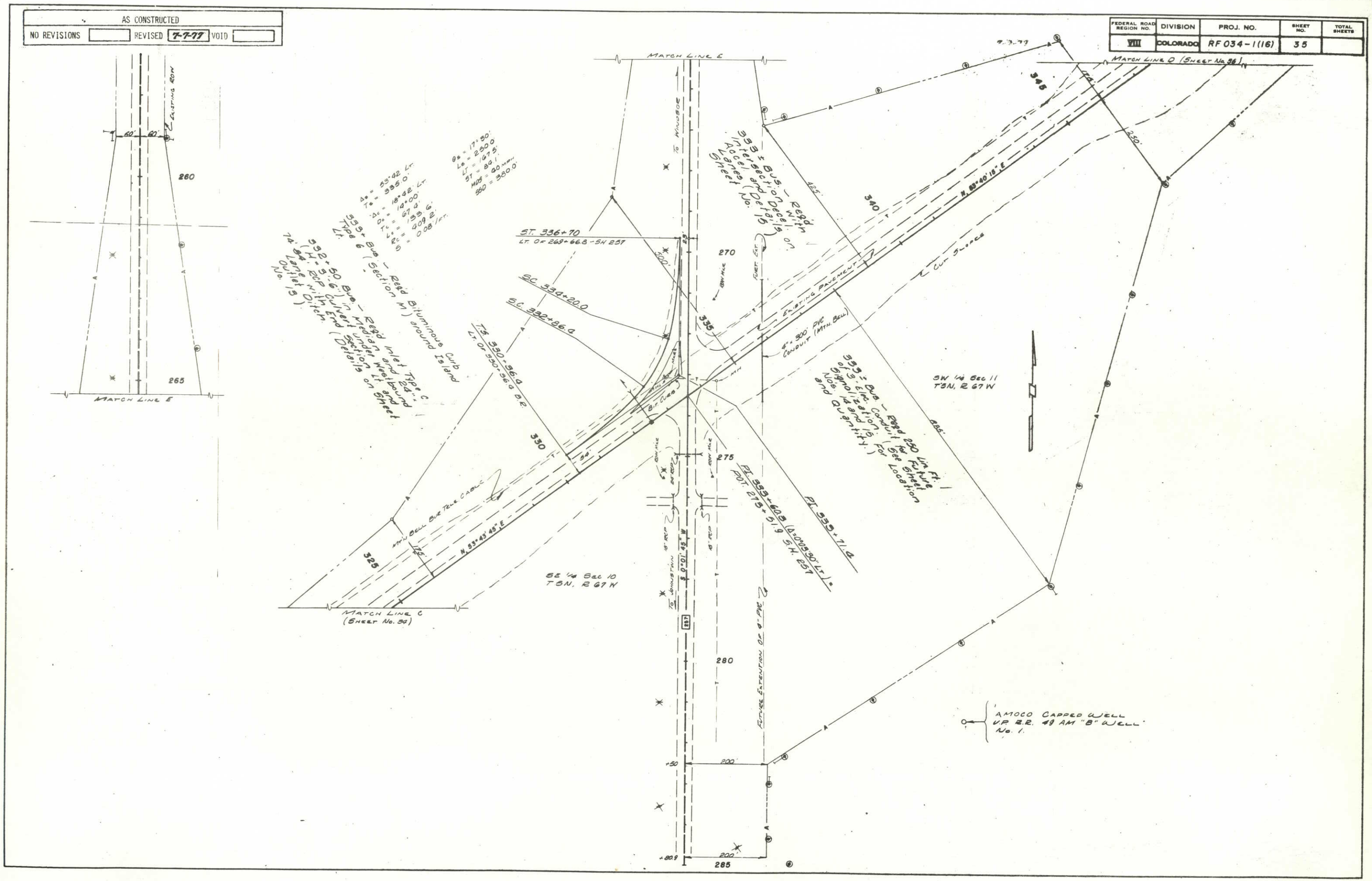

AS CONSTRUCTED			FEDERAL ROAD REGION NO.	DIVISION	PROJ. NO.	SHEET NO.	TOTAL SHEETS
NO REVISIONS	REVISED 7-7-77	VOID	VIII	COLORADO	RF 034-1(16)	36	

(R-D) 4-14-76, C.K.M. ~ Added Note

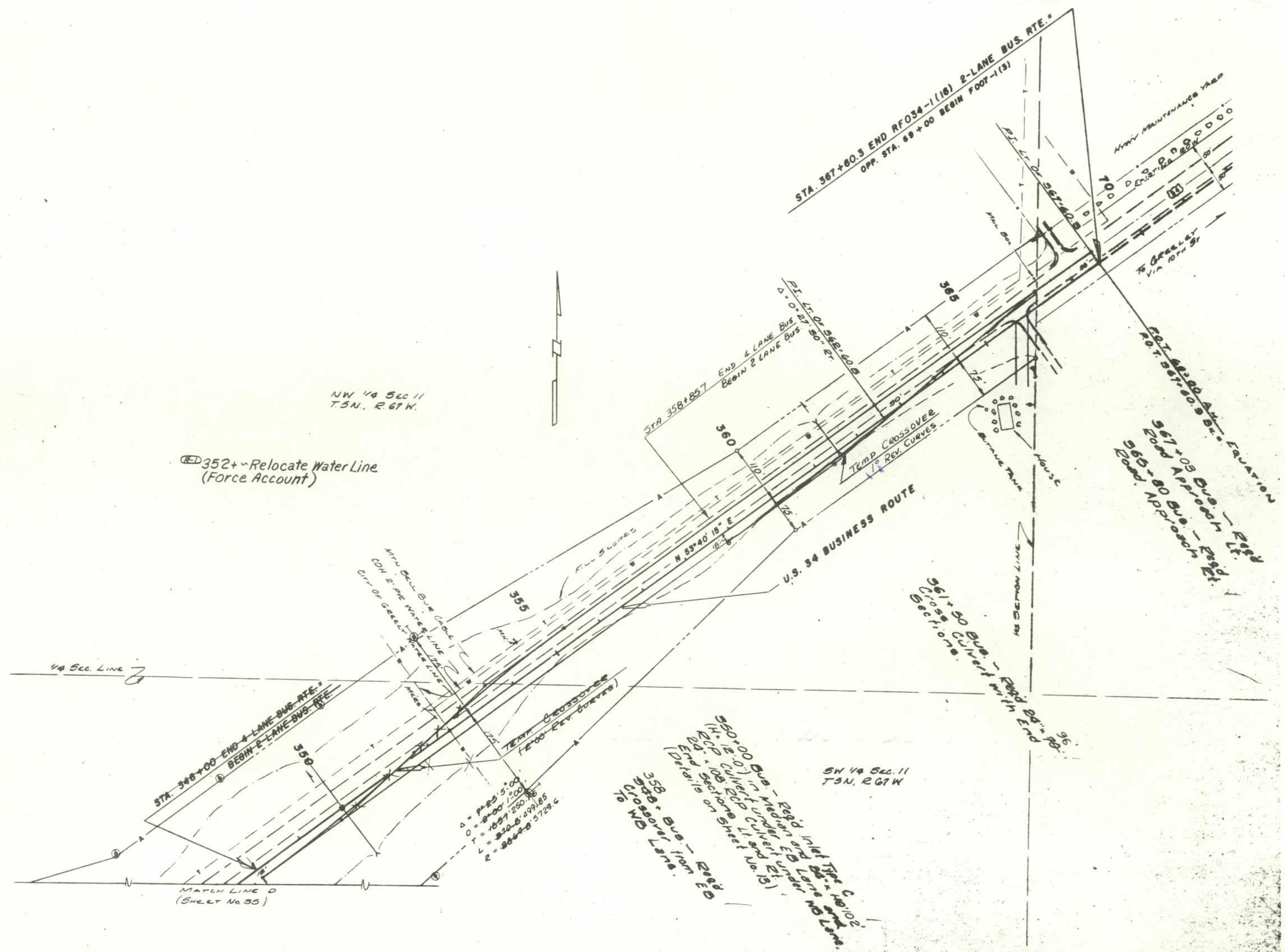

ON OF HIGHWAYS, STATE OF COLORADO
H. FORM NO. 126
MARCH, 1974