CONSTRUCTION SUBACCOUNT NO. 11169

AS CONSTRUCTED			
NO REVISIONS	PHASE	FULL	

FED. ROAD REGION	DIVISION	PROJECT NO.	SHEET NO.	SHEET TOTALS
	COLORADO	STA 0471-020	1	

REVISIONS

COLORADO DEPARTMENT OF TRANSPORTATION

PLAN AND PROFILE OF PROPOSED

FEDERAL AID PROJECT NO. STA 0471-020

STATE HIGHWAY NO. 47

TROY AVENUE EAST AND WEST

PUEBLO COUNTY

LENGTH AND DESIGN DATA

STATION	LINEAR FEET ROADWAY	LINEAR FEET MAJOR STRUCTURE
STATE HIGHWAY 47		
BEG. PROJ. NO. STA 0471-020 STA. 70+50.00 ~ STA. 70+50.00 PROJ. NO. FFU 047-1(6) = M.P. 0.91		
	7906.50	
BEGIN MAJOR STRUCTURE K-18-GA STA. 149+56.50		
		167.50
END MAJOR STRUCTURE K-18-GA STA. 151+24.00		
	3983.29	
END PROJ. NO. STA 0471-020 STA. 191+07.29 ~ STA. 191+34.97 PROJ. NO. FCU 047-1(10) = M.P. 3.19		

TOTALS SUMMARY	LIN. FT.	MILES
ROADWAY	11,889.79	2.252
MAJOR STRUCTURE	167.50	0.032
PROJECT GROSS LENGTH	12,057.29	2.284
PROJECT NET LENGTH	12,057.29	2.284

DESIGN DATA

	SH47	RAMPS
MAXIMUM DEGREE OF CURVE	3°00'	2°00'
MAXIMUM GRADE	3.90%	3.66%
MINIMUM SSD HORIZONTAL	>650 FT.	>400 FT.
MIMIMUM SSD VERTICAL	585 FT.	>365 FT.
MAXIMUM DESIGN SPEED	60 MPH	

TRAFFIC DATA

	M.P. 0.8 - 2.4	M.P. 2.4 - 3.4
CURRENT ADT (1994)	12,900	6,700
FUTURE ADT (2015)	16,100	9,400
FUTURE DHV (2015)	1,771	1,034
PERCENT TRUCKS	5%	5%

BEGIN PROJECT NO. STA 0471-020
STA. 70+50.00 SH47 ~ STA. 70+50.00 PROJ. NO. FFU 047-1(6)= M.P. 0.9

MAJOR STRUCTURE NO. K-18-GA (PROP.)
MAJOR STRUCTURE NO. K-18-EX (EXIST.)

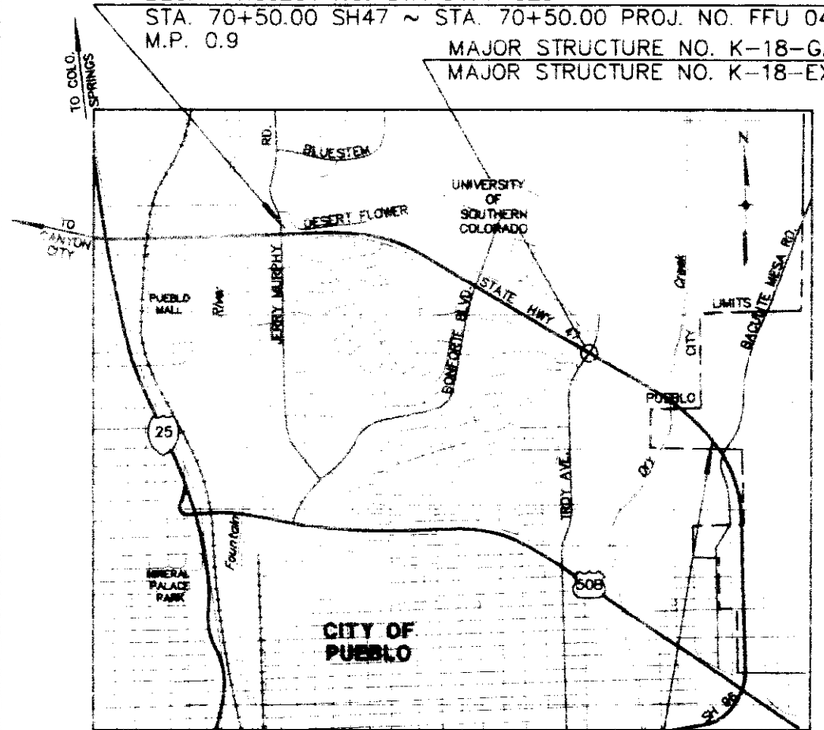

END PROJECT NO. STA 0471-020
STA. 191+07.29 ~ STA 191+34.97
PROJ. NO. FCU 047-1(10) = M.P. 3.19

INDEX OF SHEETS

SHEET NO.	DESCRIPTION
1	TITLE SHEET AND TABULATION OF LENGTH & DESIGN DATA
2	STANDARD PLANS LIST
3	GENERAL NOTES & PAVEMENT STABILIZATION DATA
4-5	TYPICAL SECTIONS AND DETAILS
6-10	SUMMARY OF APPROXIMATE QUANTITES
11	STRUCTURE QUANTITES LIST
12	SUMMARY OF EARTHWORK QUANTITES, TABULATION OF GUARDRAIL, AND GALVANIZED PIPE IRRIGATION SLEEVING
13	SURFACING PLAN
14	SURVEY TABULATION SHEET
15	CONTROL DIAGRAM SHEET
16-17	GEOMETRIC CONTROL LAYOUT
18	OUTLET PAVING DETAIL - 178+50
19	TABULATION & DETAILS OF RIPRAP BERM AND DIVERSION STRUCTURES
20	UNDERDRAIN DETAILS
21-51	MAJOR STRUCTURES NO. K-18-GA & K-18-EX
52-61	ROADWAY PLAN & PROFILE
62	SH47/JERRY MURPHY ROAD INTERCHANGE RAMP B PLAN & PROFILE
63-65	SH47/TROY AVENUE INTERCHANGE RAMPS A & B PLAN & PROFILE
66-68	ROADWAY DITCH PROFILES
69-70	WETLAND MITIGATION & TABULATIONS
71-74	STORMWATER MANAGEMENT PLAN
75-83	SIGNING AND STRIPING PLANS
84	TABULATION OF TRAFFIC ENGINEERING ITEMS, CONSTRUCTION TRAFFIC SIGNS, AND DELINEATORS
85-93	CONSTRUCTION TRAFFIC CONTROL PLANS
94-96	LIGHTING PLANS
97	POWER SOURCE DETAIL
98-99	SLOTTED RAIL TERMINAL DETAILS
100-104	STRUCTURE CROSS SECTIONS

AS CONSTRUCTED INFORMATION

CONTRACTOR _____
ENGINEER _____
PROJECT STARTED _____
PROJECT COMPLETED _____
AS CONSTRUCTED PLANS APPROVED _____
TITLE _____ DATE _____

DLM - R2 FHWA OVERSIGHT NO ☒ YES ☐ NOT APPLICABLE ☐ NHS SYSTEM NO ☐ YES ☒

AS CONSTRUCTED			FED. ROAD REGION	DIVISION	PROJ. NO.	SHEET NO.	SHEET TOTALS
NO REVISIONS	REVISED	VOID	VIII	COLO.	STA 0471-020	2	

PLAN NUMBER	M STANDARD TITLE	PAGE NUMBER
■ M-100-1	STANDARD SYMBOLS	1
□ M-107-1	TEMPORARY EROSION CONTROL	2
□ M-203-1	APPROACH ROADS	3
□ M-203-2	DITCH TYPES	4
□ M-203-10	SUPERELEVATION CROWNED HIGHWAYS	5
□ M-203-11	SUPERELEVATION DIVIDED HIGHWAYS SHOULDER PIVOT	6
□ M-203-12	SUPERELEVATION STREETS	7
■ M-203-13	SUPERELEVATION DIVIDED HIGHWAYS CENTER PIVOT	8
■ M-206-1	EXCAVATION AND BACKFILL FOR STRUCTURES (3 SHEETS)	9
■ M-206-2	EXCAVATION AND BACKFILL FOR BRIDGES	12
□ M-210-1	MAILBOX SUPPORTS (2 SHEETS)	13
□ M-214-1	PLANTING DETAILS	15
□ M-412-1	CONCRETE PAVEMENT JOINTS	16
□ M-412-2	CURBED CONCRETE PAVEMENT JOINTS	17
□ M-504-1	STEEL CRIBBING	18
□ M-506-1	GABIONS AND SLOPE MATTRESS	19
□ M-510-1	STRUCTURAL PLATE CULVERT PIPE H-20 LOADING	20
□ M-601-1	SINGLE CONCRETE BOX CULVERT (2 SHEETS)	21
□ M-601-2	DOUBLE CONCRETE BOX CULVERT (2 SHEETS)	23
□ M-601-3	TRIPLE CONCRETE BOX CULVERT (2 SHEETS)	25
□ M-601-10	HEADWALL FOR PIPE CULVERTS	27
□ M-601-11	TYPE "S" SADDLE HEADWALL FOR PIPE CULVERTS	28
■ M-601-12	HEADWALLS AND CULVERT OUTLET PAVING	29
□ M-601-20	WINGWALLS FOR PIPE OR BOX CULVERTS	30
■ M-603-1	METAL AND PLASTIC CULVERT PIPE (2 SHEETS)	31
■ M-603-2	REINFORCED CONCRETE PIPE	33
□ M-603-3	PRECAST CONCRETE BOX CULVERT	34
■ M-603-10	CONCRETE AND METAL END SECTIONS (2 SHEETS)	35
■ M-604-10	INLET, TYPE C	37
■ M-604-11	INLET, TYPE D	38
□ M-604-12	CURB INLET, TYPE R (2 SHEETS)	39
□ M-604-13	CONCRETE INLET, TYPE 13	41
□ M-604-20	MANHOLES (3 SHEETS)	42
■ M-605-1	SUBSURFACE DRAINS	45
■ M-606-1	GUARDRAIL, TYPE 3, W-BEAM (12 SHEETS)	46
■ M-606-12	GUARDRAIL, TYPE 4, CONCRETE BARRIER (6 SHEETS)	58

PLAN NUMBER	M STANDARD TITLE	PAGE NUMBER
□ M-607-1	WIRE FENCES AND GATES (2 SHEETS)	64
■ M-607-2	CHAIN LINK FENCE (3 SHEETS)	66
□ M-607-3	BARRIER FENCE	69
□ M-607-4	DEER FENCE AND GATE (2 SHEETS)	70
□ M-607-10	PICKET SNOW FENCE	72
□ M-608-1	CURB RAMPS	73
□ M-609-1	CURBS AND GUTTERS	74
□ M-611-1	CATTLE GUARD (2 SHEETS)	75
■ M-613-1	CONVENTIONAL HIGHWAY LIGHTING (3 SHEETS)	77
□ M-613-2	HIGH MAST LIGHTING (2 SHEETS)	80
□ M-614-1	RUMBLE STRIPS	82
□ M-615-1	EMBANKMENT PROTECTOR, TYPE 3	83
■ M-615-2	EMBANKMENT PROTECTOR, TYPE 5	84
□ M-616-1	INVERTED SIPHON (ALSO USE APPLICABLE M-603)	85
□ M-620-1	FIELD LABORATORY, CLASS 1	86
■ M-620-2	FIELD LABORATORY, CLASS 2	87
□ M-620-11	FIELD OFFICE, CLASS 1	88
■ M-620-12	FIELD OFFICE, CLASS 2	89
■ M-629-1	SURVEY MONUMENTS (2 SHEETS)	90

PLAN NUMBER	S STANDARD TITLE	PAGE NUMBER
■ S-612-1	TYPICAL DELINEATOR INSTALLATIONS (5 SHEETS)	93
■ S-614-1	TYPICAL GROUND SIGN PLACEMENT	98
■ S-614-2	CLASS I GROUND SIGN INSTALLATIONS	99
■ S-614-3	CLASS II GROUND SIGN INSTALLATIONS	100
■ S-614-4	CLASS III SIGNS, SHEET ALUMINUM PANELS (3 SHEETS)	101
■ S-614-5	BREAK-AWAY SIGN SUPPORT DETAILS FOR GROUND SIGNS (2 SHEETS)	104
■ S-614-6	CONCRETE FOOTINGS AND SIGN ISLANDS FOR CLASS III SIGNS (2 SHEETS)	106
■ S-614-10	TYPICAL MARKER ASSEMBLY INSTALLATIONS	108
■ S-614-11	MILEPOST SIGN AND INSTALLATION	109
■ S-614-12	STRUCTURE NUMBER INSTALLATION (BRIDGE INFORMATION SHEET)	110
□ S-614-14	FLASHING BEACON AND SIGN INSTALLATION (2 SHEETS)	111
□ S-614-20	TYPICAL POLE MOUNT SIGN INSTALLATION	113
□ S-614-21	CONCRETE BARRIER SIGN POST INSTALLATIONS	114
□ S-614-22	TYPICAL MULTI-SIGN INSTALLATIONS	115
□ S-614-40	TYPICAL TRAFFIC SIGNAL INSTALLATION DETAILS (3 SHEETS)	116
■ S-627-1	TYPICAL PAVEMENT MARKINGS (4 SHEETS)	119
■ S-630-1	TRAFFIC CONTROLS FOR HIGHWAY CONSTRUCTION (9 SHEETS)	123
■ S-630-2	BARRICADES, DRUMS, CONCRETE BARRIERS (TEMP) & VERTICAL PANELS	132
■ S-630-3	FLASHING BEACON (PORTABLE) DETAILS	133

THE STANDARD PLAN SHEETS INDICATED HEREON BY A MARKED BOX ARE TO BE USED TO CONSTRUCT THIS PROJECT.

COLORADO
DEPARTMENT OF TRANSPORTATION

STANDARD PLANS LIST

M & S STANDARDS NOVEMBER 1992

INITIAL	DATE	CHECKED BY
		QUANTITIES BY CHECKED BY

DESIGNED BY
CHECKED BY
DETAILED BY

DATE: 10-04-94
TIME: 11:4 48

DRAWING NAME: C:\DATA\17-15\CADD\ROAD\SH47SP

VIEW NAME: ALL

REGION	DIVISION	PROJECT NO.	SHEET NO.	SHEET TOTALS
7	COLORADO	STA 0471-020	3	

GENERAL NOTES:

FOR PRELIMINARY PLAN QUANTITIES OF PAVEMENT MATERIALS, THE FOLLOWING RATES OF APPLICATION WERE USED:

TACK COAT DILUTED EMUL. ASPH. (SLOW SETTING) ● 0.1 GALS./SQ. YD. (DILUTED)
BITUMINOUS PAVEMENT (GRADING C) ● 110 LBS. PER SQ. YD./INCH
DILUTED EMULSIFIED ASPHALT FOR TACK COAT SHALL CONSIST OF 1 PART EMULSIFIED ASPHALT AND ONE PART WATER.

WATER SHALL BE USED AS A DUST PALLIATIVE WHERE REQUIRED. LOCATIONS SHALL BE AS ORDERED. WATER FOR DUST PALLIATIVE SHALL BE PAID FOR SEPERATELY. THE COST OF WATER FOR COMPACTION SHALL BE INCLUDED IN THE WORK.

THE CONTRACTOR SHALL USE CARE WHEN REWORKING THE SUBGRADE IN HIGH MOISTURE CONTENT CONDITIONS NECESSARY FOR RECONDITIONING WHICH MAY CAUSE DIFFICULTY FOR EARTHWORK EQUIPMENT.

THE FOLLOWING SHALL BE FURNISHED WITH EACH BITUMINOUS PAVER:

1. A SKI TYPE DEVICE AT LEAST 30 FEET IN LENGTH.
2. A SHORT SKI OR SHOE.
3. A PAVING LEVELER AT LEAST 60 FEET IN LENGTH OR A LONG STRING LINE.

ANY LAYER OF BITUMINOUS PAVEMENT THAT IS TO HAVE A SUCCEEDING LAYER PLACED THEREON SHALL BE COMPLETED FULL WIDTH BEFORE SUCCEEDING LAYER IS PLACED.

DEPTH OF MOISTURE-DENSITY CONTROL FOR THIS PROJECT SHALL BE AS FOLLOWS:
FULL DEPTH OF EMBANKMENTS.
BASES OF CUTS AND FILLS - PER RECONDITIONING DETAIL AND SPECIAL PROVISIONS

EXCAVATION REQUIRED FOR COMPACTION OF BASES OF CUTS AND FILLS WILL BE CONSIDERED AS SUBSIDIARY TO RECONDITIONING. IT IS ESTIMATED THAT 122,502 SQ. YDS. OF RECONDITIONING WILL BE REQUIRED FOR THIS PROJECT.

TYPE OF COMPACTION FOR THIS PROJECT WILL BE AASHTO T 99. COMPACTION SHALL BE AT A MOISTURE CONTENT BETWEEN OPTIMUM AND 2% ABOVE OPTIMUM.

CONCRETE PIPE JOINT FASTENERS AS SHOWN ON M STANDARD ARE REQUIRED ON:

ALL CONCRETE CULVERT INSTALLATIONS.

THE MINIMUM THICKNESS OF TOPSOIL SHALL BE 6 INCHES. IT IS ESTIMATED THAT 16,133 CU. YDS. WILL BE REQUIRED, BASED ON AVERAGE THICKNESS, AND WILL BE OBTAINED FROM THE PROJECT SITE. THE TOP 2" - 6" OF EXISTING SOIL SHALL BE STOCKPILED FOR USE AS TOPSOIL. THE SOIL TO BE PLACED AS TOPSOIL SHALL BE FREE OF REFUSE, STUMPS, ROOTS, BRUSH, WEEDS, HARD CLODS, TOXIC SUBSTANCES, OR OTHER MATERIAL WHICH WOULD BE DETRIMENTAL TO ITS USE ON THE PROJECT. IT SHALL HAVE A MINIMUM P.I. OF 5 BUT SHALL NOT BE SUCH HEAVY CLAY AS TO PRECLUDE PLACEMENT WITH A SHOULDER MACHINE. TOPSOIL WILL NOT BE PAID FOR SEPARATELY BUT SHALL BE INCLUDED IN THE COST OF EMBANKMENT MATERIAL (C.I.P.).

IT IS ESTIMATED THAT 50 DELINEATORS WILL BE REMOVED ON THIS PROJECT AND WILL BE PAID FOR AS "REMOVAL OF DELINEATOR".

IT IS ESTIMATED THAT 56,140 SQ. YDS. OF GEOTEXTILE (PAVING) WILL BE REQUIRED FOR THE OVERLAY PORTION OF THE SH47 MAINLINE.

IT IS ESTIMATED THAT 40 LIN. FT. OF RESET FENCE WILL BE REQUIRED AT THE OUTLETS OF THE CULVERTS LOCATED AT STA. 71+45.41 AND STA. 76+15.39.

IT IS ESTIMATED THAT 220 SQ. YDS. OF DETOUR PAVEMENT WILL BE REQUIRED FOR TEMPORARY SURFACING FOR CONSTRUCTION DETOURS.

IT IS ESTIMATED THAT THE FOLLOWING WILL BE REQUIRED TO CONSTRUCT THE 3 DETOURS. THIS WILL NOT BE PAID FOR SEPARATELY BUT SHALL BE PAID FOR AS ITEM 621 - DETOUR PAVEMENT, SQ. YDS. :

HOT BITUMINOUS PAVEMENT	40 TONS
EMBANKMENT MATERIAL	146 CU. YDS.
CULVERT PIPE	170 LIN. FT.

CLEARING AND GRUBBING FOR THIS PROJECT WILL NOT BE PAID FOR SEPARATELY BUT SHALL BE INCLUDED IN THE WORK.

PAVEMENT STABILIZATION DATA

WIDENING SECTION-ADDITION OF TWO LANES MAINLINE

DESIGN TRAFFIC LOADING

DESIGN PERIOD	20 YR.
18K ESAL (FLEXIBLE PAVEMENT)	2,880,000
RELIABILITY	90%
STANDARD DEVIATION (SO)	0.44

SOIL SUPPORT VALUES

"R" VALUE (BORROW)	61
RESILIENT MODULUS (MR) (BORROW)	18,865 PSI
'R' VALUE (SUBGRADE)	6-20

SERVICEABILITY

INITIAL SERVICEABILITY INDEX	4.5
TERMINAL SERVICEABILITY INDEX	2.5
DESIGN SERVICEABILITY LOSS (ΔPSI)	2.0

DESIGN STRUCTURAL NUMBER (SN)	5.05
STRENGTH COEFFICIENT	
HOT BITUMINOUS PAVEMENT	0.44
REQUIRED PAVEMENT THICKNESS	6.84 IN.
THICKNESS USED	7.00 IN.

RAMPS

DESIGN TRAFFIC LOADING

DESIGN PERIOD	20 YR.
18K ESAL (FLEXIBLE PAVEMENT)	1,250,000
RELIABILITY	90%
STANDARD DEVIATION (SO)	0.44

SOIL SUPPORT VALUES

"R" VALUE (BORROW)	61
RESILIENT MODULUS (MR) (BORROW)	18,865 PSI

SERVICEABILITY

INITIAL SERVICEABILITY INDEX	4.5
TERMINAL SERVICEABILITY INDEX	2.5
DESIGN SERVICEABILITY LOSS (ΔPSI)	2.0

DESIGN STRUCTURAL NUMBER (SN)	4.49
STRENGTH COEFFICIENT	
HOT BITUMINOUS PAVEMENT	0.44
REQUIRED PAVEMENT THICKNESS	5.57 IN
THICKNESS USED	5.00 IN.

OVERLAY SECTION-EXISTING TWO LANES MAINLINE-WEST OF BACULITE MESA ROAD

DESIGN TRAFFIC LOADING

DESIGN PERIOD	10 YR.
18K ESAL (FLEXIBLE PAVEMENT)	1,275,000
RELIABILITY	90%
STANDARD DEVIATION (SO)	0.44

SOIL SUPPORT VALUES

"R" VALUE (SUBGRADE)	10
RESILIENT MODULUS (MR) (SUBGRADE)	3,560 PSI

SERVICEABILITY LOSS 2.0

DESIGN STRUCTURAL NUMBER (SN2)	4.50
EXISTING STRUCTURAL NUMBER (SN1)	2.84
REQUIRED STRUCTURAL NUMBER (SN)	1.66
STRENGTH COEFFICIENTS	
EXISTING HOT BITUMINOUS PAVEMENT	0.26
EXISTING BASE COURSE	0.12
EXISTING SUBBASE COURSE	0.11
NEW HOT BITUMINOUS PAVEMENT	0.44
REQUIRED PAVEMENT THICKNESS	3.77 IN.
THICKNESS USED	4.0 IN.

STATE OF COLORADO
STATE DEPARTMENT OF HIGHWAYS
DIVISION OF HIGHWAYS
D. O. H. FORM NO. 128
REV. FEB. 1964

FED. ROAD REGION	DIVISION	PROJECT NO.	SHEET NO.	SHEET TOTAL
	COLORADO	STA 0471-020	4	

REVISIONS		

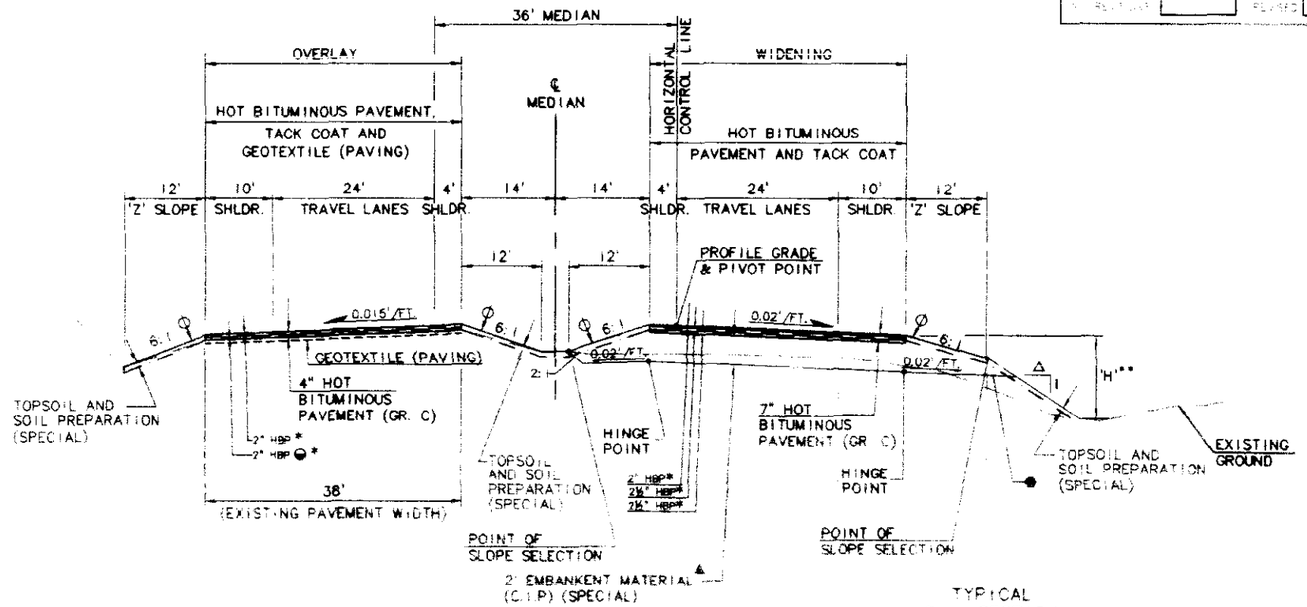

STATE HIGHWAY 47 (4 LANE)
STA. 70+50 TO STA. 175+07.38

TYPICAL FILL SECTION

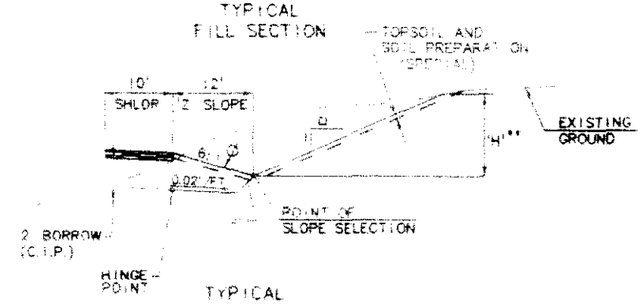

TYPICAL CUT SECTION

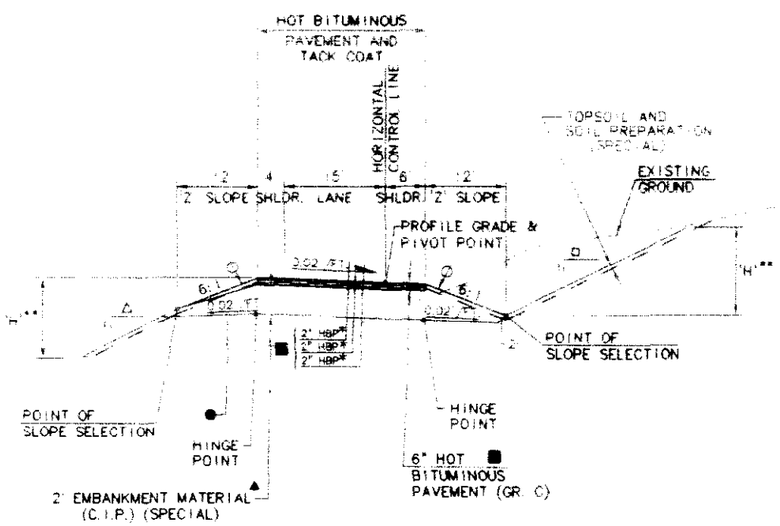

JERRY MURPHY – RAMP B

TROY AVE. – RAMPS A & B

SLOPE TABLE

H**	CUT□	FILL△
< 5'	6:1	6:1
≥ 5'-10'	4:1	4:1
> 10'	3:1♦	3:1

♦: 2.5:1 STA. 111+00 TO STA. 116+00, RT. AND STA. 124+00 TO STA. 128+00, RT.

* APPROXIMATE THICKNESS

⊖ 2" HBP OVERLAY OVER 1" (AVG.) HBP LEVELING COURSE. GEOTEXTILE TO BE PLACED OVER LEVELING COURSE.

▲ EMBANKMENT MATERIAL (C.I.P) (SPECIAL) SHALL HAVE A MINIMUM M_R = 18865 psi (R61). PLACEMENT OF HBP FOR ALL ROADWAYS SHALL BE ON TWO FEET OF EMBANKMENT MATERIAL (C.I.P.) (SPECIAL).

♣ MATERIAL GENERATED ON SITE MAY BE USED BELOW THIS LINE (ESTABLISHED SUBGRADE LINE).

⊘ TOPSOIL SHALL BE PLACED TO THIS LINE AFTER COMPLETION OF GRADING OPERATIONS AND PRIOR TO TREATMENT WITH SOIL PREPARATION (SPECIAL), SEEDING AND MULCHING.

■ HBP FOR TROY AVE. RAMP A (STA. 708+50 TO STA. 711+50) SHALL BE 4" HOT BITUMINOUS PAVEMENT (GRADING C) AND SHALL BE CONSTRUCTED IN TWO 2 INCH LIFTS.

NOTE: CROSS SECTIONS SHOW FINISH GRADING OF EARTHWORK; CONSTRUCTION OF "Z" SLOPE AREAS TO FINISH GRADE SHALL BE DONE WITH TOPSOIL OVER EMBANKMENT MATERIAL (C.I.P.) (SPECIAL).

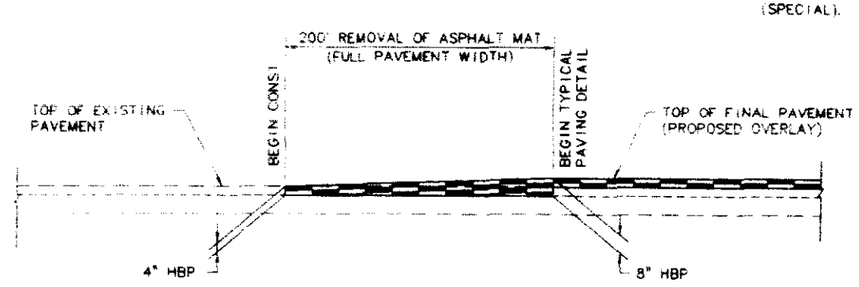

HBP TRANSITION DETAIL (PROFILE)
(TYPICAL BEGIN AND END OVERLAY CONSTRUCTION)

INITIAL	DATE	
DESIGNED BY		CHECKED BY
CHECKED BY		QUANTITIES BY
DETAILED BY		CHECKED BY

TYPICAL SECTIONS

AS CONSTRUCTED	FED. ROAD REG. ON	DIVISION	PROJECT NO.	SHEET NO.	SHEET TOTALS
NO. REV. RUNS ____ REV. BY ____ NO. D ____	VI	COLORADO	STA 0471-020	5	

REVISIONS	

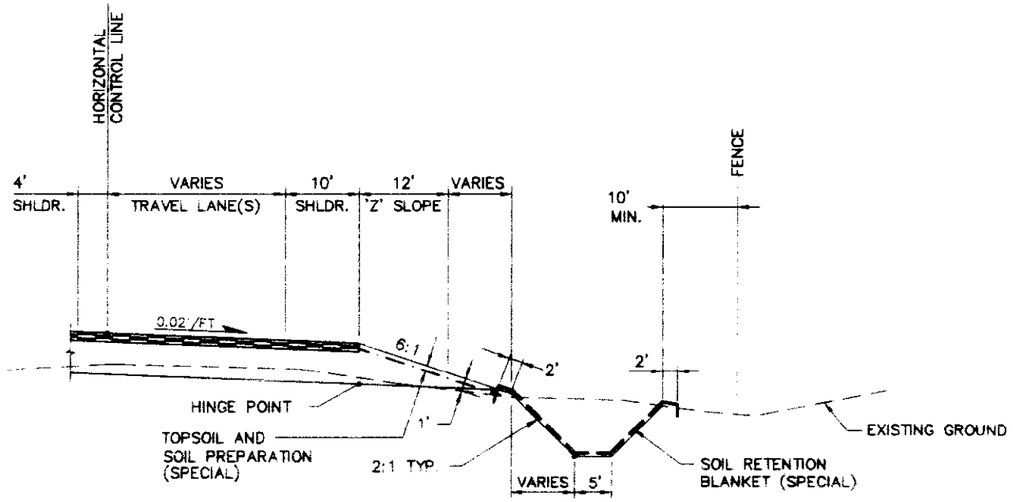

STATE HIGHWAY 47 (PROPOSED DITCH)

STA. 76+15.39, RT. TO STA. 93+00, RT.

NOTE: THE LIMITS OF THE SOIL RETENTION BLANKET SHALL EXTEND 2 FEET BEYOND THE CATCH POINT OF THE DITCH AND SHALL BE EMBEDDED TO A DEPTH OF 1 FOOT.

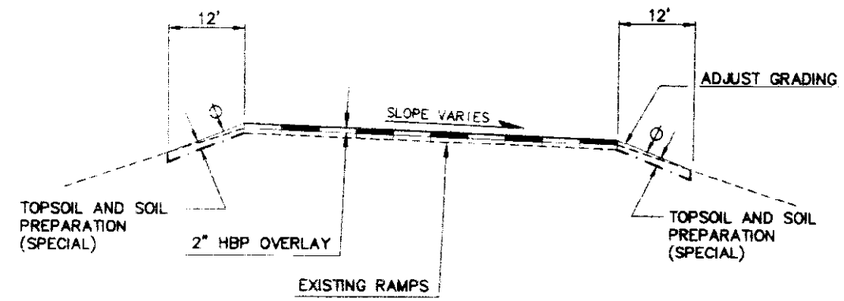

RAMP OVERLAYS

JERRY MURPHY – RAMP B & D (EXISTING)

TROY AVE. – RAMPS B, C, & D (EXISTING)

TOPSOIL SHALL BE PLACED TO THIS LINE AFTER COMPLETION OF PAVING OPERATIONS

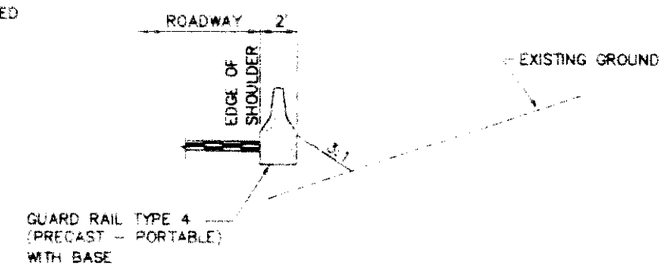

GUARD RAIL TYPE 4 DETAIL

STA. 118+50 RT. TO STA. 123+50 RT.

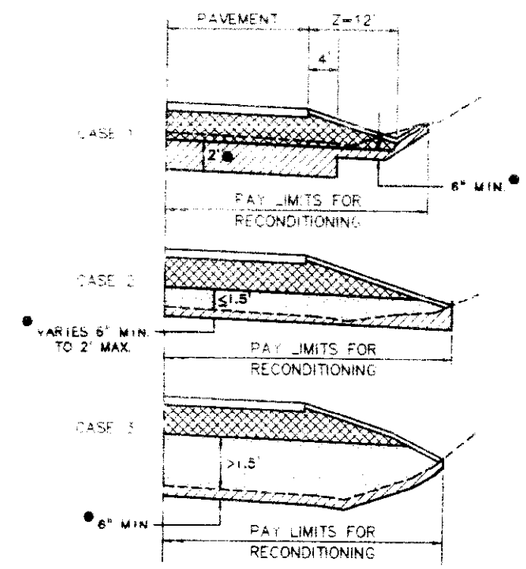

SUBGRADE RECONDITIONING DETAIL

DEPTH OF RECONDITIONING

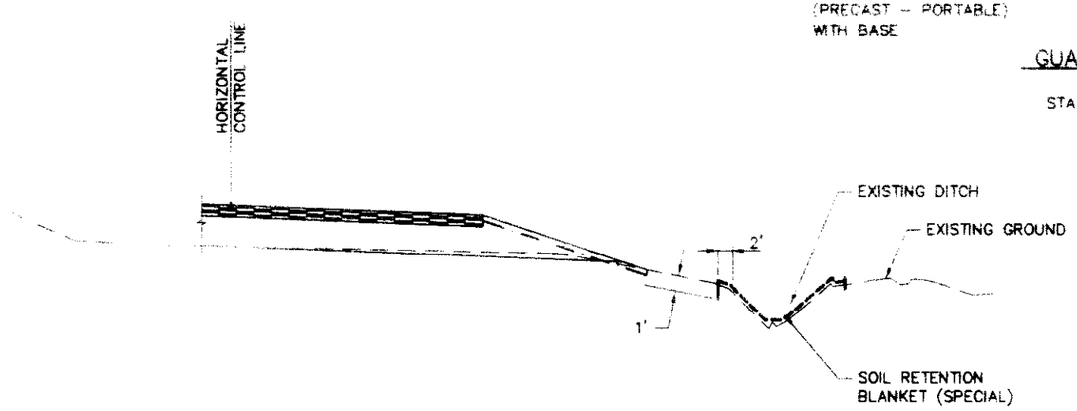

STATE HIGHWAY 47 (EXISTING DITCH)

STA. 93+00.00, RT. TO STA. 96+00.00, RT.

LEGEND

- EMBANKMENT MATERIAL (C.I.P.) (SPECIAL)
- EMBANKMENT MATERIAL (C.I.P.)
- RECONDITIONING

INITIAL	DATE	CHECKED BY
		QUANTITIES BY
		CHECKED BY

DESIGNED BY
CHECKED BY
DETAILED BY

TYPICAL SECTIONS/DETAILS

SUMMARY OF APPROXIMATE QUANTITIES

AS CONSTRUCTED		
NO REVISIONS	REVISED	VOID

CDOT	FED. ROAD REGION	DIVISION	PROJ. NO.	SHEET NO.
	VIII	COLO.	STA 0471-020	6

INDEX BOOK	INDEX PAGE	INDEX SHEET	CONTRACT ITEM NO.	CONTRACT ITEM	UNIT	ROADWAY PLAN	ROADWAY AS CONST.	STRUCTURE NO. K-18-GA PLAN	STRUCTURE NO. K-18-GA AS CONST.	STRUCTURE NO. K-18-EX PLAN	STRUCTURE NO. K-18-EX AS CONST.	PROJECT TOTALS PLAN	PROJECT TOTALS AS CONST.
			202	REMOVAL OF STRUCTURE	EACH	2						2	
			202	REMOVAL OF SLOPE AND DITCH PAVING	SY	2						2	
			202	REMOVAL OF PIPE	LF	860						860	
			202	REMOVAL OF DELINEATOR	EACH	50						50	
			202	REMOVAL OF ASPHALT MAT	SY	14,191						14,191	
			202	REMOVAL OF ASPHALT MAT (PLANING)	SY					780		780	
			202	REMOVAL OF PAVEMENT MARKING	SF	3,000						3,000	
			202	REMOVAL OF BRIDGE RAILING	LF					414		414	
			202	REMOVAL OF GROUND SIGN	EACH	12						12	
			202	REMOVAL OF GUARDRAIL TYPE 3	LF	381						381	
			203	EMBANKMENT MATERIAL (COMPLETE IN PLACE)	CY	60,240						60,240	
			203	EMBANKMENT MATERIAL (COMPLETE IN PLACE) (SPECIAL)	CY	59,488						59,488	
			203	DOZING (LANDSCAPING)	HOUR	20						20	
			206	STRUCTURE EXCAVATION	CY	2,293		38		316		2,647	
			206	STRUCTURE BACKFILL (FLOW-FILL)	CY			382		176		558	
			206	STRUCTURE BACKFILL (CLASS 1)	CY	323		474				797	
			206	STRUCTURE BACKFILL (CLASS 2)	CY	989						989	
			206	FILTER MATERIAL (CLASS A)	CY	68						68	
			207	WETLAND TOPSOIL	CY	180						180	
			208	EROSION BALES	EACH	140						140	
			208	SILT FENCE	LF	50						50	
			209	WATER	MGAL	500						500	
			210	RESET LIGHT STANDARD	EACH	5						5	
			210	RESET LUMINAIRE	EACH	5						5	
			210	RESET GROUND SIGN	EACH	9						9	
			210	RESET FLASHING BEACON	EACH	1						1	
			210	RESET FENCE	LF	40						40	
			212	SEEDING (NATIVE)	ACRE	20						20	
			212	SOIL PREPARATION (SPECIAL)	ACRE	20						20	
			213	MULCHING	ACRE	20						20	
			213	MULCH TACKIFIER	LB	2,500						2,500	
			216	SOIL RETENTION BLANKET (SPECIAL)	SY	9,310						9,310	
			306	RECONDITIONING	SY	122,502						122,502	

SUMMARY OF APPROXIMATE QUANTITIES

AS CONSTRUCTED		
NO REVISIONS	REVISED	VOID

CDOT	FED. ROAD REGION	DIVISION	PROJ. NO.	SHEET NO.
	VIII	COLO.	STA 0471-020	7

INDEX BOOK	INDEX PAGE	INDEX SHEET	CONTRACT ITEM NO.	CONTRACT ITEM	UNIT	ROADWAY PLAN	ROADWAY AS CONST.	STRUCTURE NO. K-18-GA PLAN	STRUCTURE NO. K-18-GA AS CONST.	STRUCTURE NO. K-18-EX PLAN	STRUCTURE NO. K-18-EX AS CONST.	PROJECT TOTALS PLAN	PROJECT TOTALS AS CONST.
			403	HOT BITUMINOUS PAVEMENT (PATCHING) (ASPHALT)	TON	115						115	
			403	HOT BITUMINOUS PAVEMENT (GRADING C) (ASPHALT) (C 100)	TON	38,517		90		14		38,621	
			411	EMULSIFIED ASPHALT (SLOW-SETTING)	GAL	5,660						5,660	
			420	GEOTEXTILE (EROSION CONTROL) (CLASS A)	SY	699						699	
			420	GEOTEXTILE (DRAINAGE) (CLASS B)	SY	30						30	
			420	GEOTEXTILE (PAVING)	SY	56,140						56,140	
			502	STEEL PILING (HP 12X74)	LF			525				525	
			506	RIPRAP (12 INCH)	CY	224						224	
			506	RIPRAP (18 INCH)	CY	123						123	
			506	RIPRAP (24 INCH)	CY	469						469	
			507	CONCRETE SLOPE AND DITCH PAVING (REINFORCED)	CY	2		90				92	
			507	BITUMINOUS SLOPE AND DITCH PAVING (ASPHALT)	TON	12						12	
			513	BRIDGE DRAIN (SPECIAL)	EACH			1				1	
			515	WATERPROOFING (MEMBRANE)	SY			823		132		955	
			518	BRIDGE EXPANSION DEVICE (0-2 INCH)	LF			76		84		160	
			601	CONCRETE CLASS A (WALL)	CY	11						11	
			601	CONCRETE CLASS B (MISCELLANEOUS)	CY	28						28	
			601	CONCRETE CLASS B (BRIDGE)	CY			41				41	
			601	CONCRETE CLASS D (BRIDGE)	CY			54		64		118	
			601	CONCRETE CLASS S (BRIDGE)	CY			521				521	
			602	REINFORCING STEEL	LB	2,626		84,005		9,675		96,306	
			602	REINFORCING STEEL (EPOXY COATED)	LB			42,210				42,210	
			603	24 INCH REINFORCED CONCRETE PIPE	LF	205						205	
			603	36 INCH REINFORCED CONCRETE PIPE	LF	663						663	
			603	42 INCH REINFORCED CONCRETE PIPE	LF	167						167	
			603	60X38 INCH REINFORCED CONCRETE PIPE ELLIPTICAL	LF	168						168	
			603	24 INCH REINFORCED CONCRETE END SECTION	EACH	2						2	
			603	36 INCH REINFORCED CONCRETE END SECTION	EACH	1						1	
			603	60X38 INCH REINFORCED CONCRETE END SECTION ELLIPTICAL	EACH	1						1	
			603	24 INCH CORRUGATED STEEL PIPE	LF	29						29	
			603	24 INCH STEEL END SECTION	EACH	3						3	
			604	INLET TYPE C (5 FOOT)	EACH	2						2	

VIEW NAME SHEET7 DRAWING NAME C:\DATA\7IB\ADD\MSAD\SAUP DATE 11-01-1995 INC 144347

SUMMARY OF APPROXIMATE QUANTITIES

AS CONSTRUCTED			CDOT	FED. ROAD REGION	DIVISION	PROJ. NO.	SHEET NO.
NO REVISIONS	REVISED	VOID		VIII	COLO.	STA 0471-020	8

INDEX BOOK	INDEX PAGE	INDEX SHEET	CONTRACT ITEM NO.	CONTRACT ITEM	UNIT	ROADWAY PLAN	ROADWAY AS CONST.	STRUCTURE NO. K-18-GA PLAN	STRUCTURE NO. K-18-GA AS CONST.	STRUCTURE NO. K-18-EX PLAN	STRUCTURE NO. K-18-EX AS CONST.	PROJECT TOTALS PLAN	PROJECT TOTALS AS CONST.
			604	INLET TYPE D (10 FOOT)	EACH	2						2	
			605	6 INCH PERFORATED PIPE UNDERDRAIN	LF	1,520						1,520	
			605	SUBSURFACE DRAIN OUTLET	LF	31						31	
			606	GUARDRAIL TYPE 3 (6-3 POST SPACING)	LF	1,287.5						1,287.5	
			606	GUARDRAIL TYPE 4 (PRECAST-PORTABLE)	LF	500						500	
			606	END ANCHORAGE TYPE 3D	EACH	2						2	
			606	END ANCHORAGE TYPE 3F	EACH	4						4	
			606	END ANCHORAGE TYPE 3G	EACH	5						5	
			606	END ANCHORAGE TYPE 3H	EACH	4						4	
			606	END ANCHORAGE (SLOTTED RAIL TERMINAL)	EACH	3						3	
			606	BRIDGE RAIL TYPE 10 SPECIAL	LF			423				423	
			606	BRIDGE RAIL TYPE 10R SPECIAL	LF					414		414	
			612	DELINEATOR (FLEXIBLE) (TYPE I)	EACH	199						199	
			612	DELINEATOR (FLEXIBLE) (TYPE II)	EACH	100						100	
			612	DELINEATOR (FLEXIBLE) (TYPE III)	EACH	8						8	
			613	3/4 INCH ELECTRICAL CONDUIT	LF			55				55	
			613	2 INCH ELECTRICAL CONDUIT	LF			862				862	
			613	2 INCH ELECTRICAL CONDUIT (JACKED)	LF	265						265	
			613	2 INCH ELECTRICAL CONDUIT (PLASTIC)	LF	5,340						5,340	
			613	WIRING	L.S.	1						1	
			613	LIGHT STANDARD METAL (40 FOOT)	EACH	11						11	
			613	CONCRETE FOUNDATION PAD	EACH	16						16	
			613	LIGHTING SYSTEM	EACH			1				1	
			613	LUMINAIRE HIGH PRESSURE SODIUM (100 WATT)	EACH	2						2	
			613	LUMINAIRE HIGH PRESSURE SODIUM (400 WATT)	EACH	11						11	
			614	SIGN PANEL (CLASS I)	SF	9						9	
			614	SIGN PANEL (CLASS II)	SF	123						123	
			614	SIGN PANEL (CLASS III)	SF	392						392	
			614	TIMBER SIGN POST 6X6 INCH	LF	220						220	
			614	STEEL SIGN POST (U-2)	LF	84						84	
			614	STEEL SIGN POST (W 6X12)	LF	60						60	
			614	STEEL SIGN POST (W 6X15)	LF	56						56	

SUMMARY OF APPROXIMATE QUANTITIES

AS CONSTRUCTED			CDOT	FED. ROAD REGION	DIVISION	PROJ. NO.	SHEET NO.
NO REVISIONS	REVISED	VOID		VIII	COLO.	STA 0471-020	9

INDEX BOOK	INDEX PAGE	INDEX SHEET	CONTRACT ITEM NO.	CONTRACT ITEM	UNIT	ROADWAY PLAN	ROADWAY AS CONST.	STRUCTURE NO. K-18-GA PLAN	STRUCTURE NO. K-18-GA AS CONST.	STRUCTURE NO. K-18-EX PLAN	STRUCTURE NO. K-18-EX AS CONST.	PROJECT TOTALS PLAN	PROJECT TOTALS AS CONST.
			614	STEEL SIGN POST (W 8X18)	LF	34						34	
			614	CONCRETE FOOTING (TYPE 1)	EACH	4						4	
			614	CONCRETE FOOTING (TYPE 2)	EACH	4						4	
			614	CONCRETE FOOTING (TYPE 3)	EACH	2						2	
			615	EMBANKMENT PROTECTOR TYPE 5	EACH	1						1	
			615	LOG DAM	EACH	3						3	
			618	PRESTRESSING STEEL WIRE OR STRAND	MKFT			2,090				2,090	
			619	4 INCH GALVANIZED PIPE	LF	225						225	
			619	6 INCH GALVANIZED PIPE	LF	225						225	
			620	FIELD OFFICE (CLASS 2)	EACH	1						1	
			620	FIELD LABORATORY (CLASS 2)	EACH	1						1	
			620	SANITARY FACILITY	EACH	2						2	
			621	DETOUR PAVEMENT	SY	220						220	
			625	CONSTRUCTION SURVEYING	L S	0.8		0.15		0.05		1	
			626	MOBILIZATION	L S	0.8		0.15		0.05		1	
			627	PAVEMENT MARKING PAINT	GAL	220						220	
			627	THERMOPLASTIC PAVEMENT MARKING	SF	19,620						19,620	
			627	PREFORMED PLASTIC PAVEMENT MARKING (60 MILS)	SF	6,715						6,715	
			627	PREFORMED PLASTIC PAVEMENT MARKING (60 MIL) (XWALK-STOP LINE)	SF	180						180	
			627	PREFORMED THERMOPLASTIC PAVEMENT MARKING (WORD-SYMBOL)	SF	126						126	
			629	SURVEY MONUMENT (TYPE 1)	EACH	9						9	
			630	FLAGGING	HOUR	4,000						4,000	
			630	TRAFFIC CONTROL SUPERVISOR	DAY	170						170	
			630	TRAFFIC CONTROL INSPECTION	DAY	100						100	
			630	BARRICADE (TYPE 3 M-B) (TEMPORARY)	EACH	8						8	
			630	CONSTRUCTION TRAFFIC SIGN (PANEL SIZE A)	EACH	29						29	
			630	CONSTRUCTION TRAFFIC SIGN (PANEL SIZE B)	EACH	60						60	
			630	ADVANCE WARNING FLASHING OR SEQUENCING ARROW PANEL (C TYPE)	EACH	2						2	
			630	DRUM CHANNELIZING DEVICE	EACH	300						300	
			630	CONCRETE BARRIER (TEMPORARY)	LF	1,200						1,200	
			630	TRAFFIC CONE	EACH	200						200	

VIEW NAME SHEET4 DRAWING NAME C:\DATA\STR\CADD\DGN\S404 DATE 11-03-1995 INC 1427-05

SUMMARY OF APPROXIMATE QUANTITIES

AS CONSTRUCTED			CDOT	FED. ROAD REGION	DIVISION	PROJ. NO.	SHEET NO.
NO REVISIONS	REVISED	VOID		VIII	COLO.	STA 0471-020	10

INDEX BOOK	INDEX PAGE	INDEX SHEET	CONTRACT ITEM NO.	CONTRACT ITEM	UNIT	ROADWAY PLAN	ROADWAY AS CONST.	STRUCTURE NO. K-18-GA PLAN	STRUCTURE NO. K-18-GA AS CONST.	STRUCTURE NO. K-18-EX PLAN	STRUCTURE NO. K-18-EX AS CONST.	PROJECT TOTALS PLAN	PROJECT TOTALS AS CONST.
			630	IMPACT ATTENUATOR (SAND FILLED PLASTIC BARREL) (TEMPORARY)	EACH	2						2	
				FORCE ACCOUNT ==========									
			700	F/A MINOR CONTRACT REVISIONS	F A	1						1	
			700	F/A PARTNERING	F A	1						1	
			700	F/A ON-THE-JOB TRAINEE	EACH	2						2	
			700	F/A OJT PILOT	F A	1						1	
			700	F/A QUALITY INCENTIVE PAYMENT	F A	1						1	
			700	F/A PAVEMENT SMOOTHNESS INCENTIVE	F A	1						1	
			700	F/A TEMPORARY ERROSION CONTROL	F A	1						1	
			700	F/A INSTALL POWER SOURCE CONNECTION	F A	1						1	
			700	F/A POWER SOURCE FOR HIGHWAY LIGHTING	F A	1							

VIEW NAME: SHEET 15 DRAWING NAME: C:\DATA\17-R\CADD\RDAD\SAQ5 DATE: 11-03-1999 DNR: 14:30:45

AS CONSTRUCTED			FED. ROAD REGION	DIVISION	PROJECT NO.	SHEET NO.	SHEET TOTALS
NO. REVISIONS	REVISED	VOID	VIII	COLORADO	STA 0471-020	11	

STRUCTURE QUANTITIES

INDEX BOOK	INDEX PAGE	INDEX SHEET	LOCATION	REMOVAL OF PIPE L.F.	REMOVAL OF STRUCTURE EACH	● CLEAN CULVERT EACH	EMBANKMENT MATERIAL CUBIC YARD INFORMATION ONLY EXCAV	EMBANKMENT MATERIAL CUBIC YARD INFORMATION ONLY DITCH	EMB (C.I.P.)	STRUCTURE EXCAVATION CUBIC YARD	STRUCTURE BACKFILL CUBIC YARD CL 1	STRUCTURE BACKFILL CUBIC YARD CL 2	HOT BITUMINOUS PAVEMENT (PATCHING) (ASPHALT) TON	CONCRETE CLASS A CUBIC YARD (WALL)	INLET EACH TYPE C 5'	INLET EACH TYPE D 10'	REINFORCED CONCRETE PIPE LINEAR FEET RCP 24"	RCP 36"	RCP 42"	RCHEP 60"x38"	CORRUGATED STEEL PIPE LINEAR FEET 24"	"H" OVER CULV. FT.	END SECTION EACH RCP 24"	RCP 36"	RCHEP 60"x38"	CSP 24"	PERFORATED PIPE UNDERDRAIN LINEAR FEET 6"	CONCRETE SLOPE AND DITCH PAV. (REINF.) SQ. YD.	SOIL RETENTION BLANKET (SPECIAL) SQ. YD.	RIPRAP (12 INCH) CU. YD.	FILTER MATERIAL CLASS A CU. YD.	GEOTEXTILE (ERO CTRL) (CLASS A) SQ. YD.	GEOTEXTILE (DRAINAGE) (CLASS B) SQ. YD.	MISCELLANEOUS
			71+45.41	313	1		218		181	691	110	182	15	3		1		303				6.1		1				10					TYPE D INLET: H=6.59' CONCRETE HEADWALL LT.
			76+15.39	175			122		84	410	72	132	22	4				360				3.8						4		23	4	35		TWIN 36" RCP, CONCRETE HEADWALL LT., DIVERSION STRUCTURE RT., REMOVE 2 SQ. YDS. SLOPE & DITCH PAVING
			81+13.24			1															15					1				30	4	32		REMOVE FES RT. ●, RIPRAP BERM RT.
			86+08.23	155	1		51		78	265	49	87	14	4		1			167			7.1								17	3	25		TYPE D INLET: H=6.63' CONCRETE HEADWALL LT., DIVERSION STRUCTURE RT.
			91+05.01	162			81		85	312	55	91	17								168	6.8			1					26	4	39		DIVERSION STRUCTURE RT.
			93+00 – 96+01, RT																										1100					PLACE IN EXISTING DITCH RT.
			96+01.50			1					2	2									6					1				44	5	46		REMOVE FES RT. ●, RIPRAP BERM RT.
			101+01.92			1				2	3	3									8					1								REMOVE FES RT. ●
			107+05.38			1																								43	4	44		RIPRAP BERM RT.
			115+00 – 131+00, 80' LT.				341																				1520				●363		●2282	71 LF SUBSURFACE DRAIN OUTLET
			149+12.45				2			35	4	67				1		68						1						4		16		TYPE C INLET, H=4.02' 1 EA. EMBANKMENT PROTECTOR TYPE S, RT. 1.2 TONS BIT. SLOPE & DITCH PAVING
			149+90, 210' RT. 151+90, 170' LT																											37				PLACE AT END OF EXIST. EMB. PROTECTOR
			161+95, 20' RT.	55																														
			166+50, 100' LT									100																	105					PLACE AROUND WINGWALLS
			170+50 – 173+00, LT.					1480																										
			171+00.79				2		12	108	28	47						137				3.1	1											TYPE C INLET, H=3.45'
			178+50, RT							469		278																	225		43	460		PLACE PER DETAIL 469 CU. YDS. RIPRAP (24 INCH)
			ROADSIDE DITCH 71+45 – 93+00, RT.																										6780					
			EXISTING DITCH 93+00 – 96+01, RT.																										1100					
			TOTALS	860	2	●5	▲836	▲1480	▲441	□2293	□323	989	*68	11	2	2	205	663	167	168	29	2	1	1	3	1520	□14	9310	224	68	699	**30	

● : PAYMENT FOR REMOVAL OF FLARED END SECTION WILL NOT BE MADE SEPARATELY BUT SHALL BE INCLUDED IN THE COST OF THE WORK.
● : FOR INFORMATION ONLY.
▲ : CARRIED TO EARTHWORK SUMMARY.
□ : FOR ADDITIONAL QUANTITIES, SEE BRIDGE SUMMARY.
* : CARRIED TO SURFACING PLAN.

** : FROM WETLAND DROP STRUCTURE SUMMARY

INITIAL	DATE	CHECKED BY
		QUANTITIES BY
		CHECKED BY

DESIGNED BY
CHECKED BY
DETAILED BY

REVISIONS	AS CONSTRUCTED	FED. ROAD SECTION	STATE	PROJECT NO.	SHEET NO.	SHEET TOTALS
	NO REVISIONS / REVISED / CODE	V	COLORADO	STA 0471-020	12	

TABULATION OF GUARDRAIL

LOCATION	SIDE	REMOVAL OF GUARD RAIL TYPE 3 LIN. FT. PLAN	REMOVAL OF GUARD RAIL TYPE 3 LIN. FT. AS CONST.	GUARD RAIL TYPE 3 ◆ 6'-3" POST SPACING LIN. FT. PLAN	GUARD RAIL TYPE 3 ◆ 6'-3" POST SPACING LIN. FT. AS CONST.	GUARD RAIL TYPE 4 (PRECAST-PORTABLE) LIN. FT. PLAN	GUARD RAIL TYPE 4 (PRECAST-PORTABLE) LIN. FT. AS CONST.	END ANCHORAGE SRT EACH	END ANCHORAGE TYPE 3D EACH	END ANCHORAGE TYPE 3F EACH	END ANCHORAGE TYPE 3G EACH	END ANCHORAGE TYPE 3H EACH
SH47 MAINLINE												
STA. 117+31.25 ~ STA. 117+68.75	RT.							1				
STA. 117+68.75 ~ STA. 118+31.25	RT.			62.5								
STA. 118+31.25 ~ STA. 118+50.00	RT.										1	
STA. 118+50.00 ~ STA. 123+50.00	RT.					500						
STA. 118+89.60 ~ STA. 119+14.60	LT.			25*						1		
STA. 119+14.60 ~ STA. 119+89.60	LT.			150								
STA. 119+33.00 ~ STA. 121+20.00	LT.	187										
STA. 119+89.60 ~ STA. 120+52.10	LT.			125								
STA. 120+52.10 ~ STA. 121+27.10	LT.			150								
STA. 121+27.10 ~ STA. 121+52.10	LT.			25*						1		
STA. 147+53.98 ~ STA. 147+78.98	LT.			25*								
STA. 147+78.98 ~ STA. 148+41.48	LT.			125								
STA. 148+03.98 ~ STA. 148+41.48	RT.			37.5▲				1				
STA. 148+41.48 ~ STA. 149+16.48	LT.			150								
STA. 148+41.48 ~ STA. 149+16.48	RT.			75								
STA. 148+66.48	LT.								1			
STA. 148+66.48 ~ STA. 149+16.48	LT.			50								
STA. 148+89.00 ~ STA. 149+37.00	LT. & RT.	96										
STA. 149+16.48 ~ STA. 149+36.96	LT.										1	2
STA. 149+16.48 ~ STA. 149+36.96	RT.										1	
STA. 151+43.00 ~ STA. 151+92.00	LT. & RT.	98										
STA. 151+43.54 ~ STA. 151+64.02	LT.										2	1
STA. 151+43.54 ~ STA. 151+64.02	RT.											1
STA. 151+64.02 ~ STA. 152+39.02	LT.			75								
STA. 151+64.02 ~ STA. 152+39.02	LT.			150								
STA. 151+64.02 ~ STA. 152+14.02	RT.			50								
STA. 152+14.02	RT.								1			
STA. 152+39.02 ~ STA. 152+76.52	LT.			37.5▲				1				
STA. 152+39.02 ~ STA. 153+01.52	LT.			125								
STA. 153+01.52 ~ STA. 153+26.52	LT.			25*						1		
PROJECT TOTAL		381		1287.5		500		3	2	4	5	4

CONSTRUCTION OF GUARDRAIL POSTS BETWEEN STA. 117+ AND STA. 121+50 MAY ENCOUNTER CLAYSTONE BEDROCK. COST OF CONSTRUCTING POSTS IN CLAYSTONE SHALL BE INCLUDED IN THE WORK. STEEL POSTS SHALL BE USED FOR ALL TYPE 3 GUARDRAIL.

* FOR INFORMATION ONLY – PAID FOR UNDER ITEM 606 END ANCHORAGE (3F) – EACH

▲ FOR INFORMATION ONLY – PAID FOR UNDER ITEM 606 END ANCHORAGE (SRT) – EACH

◆ GUARD RAIL TYPE 3 SHALL BE GALVANIZED.

SUMMARY OF EARTHWORK QUANTITIES

PAY ITEMS	PROJECT TOTALS CU. YD. PLAN	AS CONST.
EMBANKMENT MATERIAL (COMPLETE IN PLACE)		
ROADWAY (COMPUTER GENERATED EARTHWORK)	59,799	
FROM STRUCTURE QUANTITY LIST	441	
TOTAL	60,240	
WETTING		
DUST PALLIATIVE	500 MGAL	
TOTAL	500 MGAL	
EMBANKMENT (COMPLETE IN PLACE) (SPECIAL)	59,488	
FOR INFORMATION ONLY		
COMPACTION (AASHTO T99)		
EMBANKMENT MATERIAL (C.I.P.)	59,799	
EMBANKMENT MATERIAL (C.I.P.) (SPECIAL)	59,488	
BASE OF CUTS AND FILLS (PAID AS RECONDITIONING BY SQ. YD.)	37,410	
FROM STRUCTURE QUANTITY LIST	441	
TOTAL	157,138	
ROADWAY QUANTITIES BALANCE		
EXCAVATION		
ROADWAY (COMPUTER GENERATED EARTHWORK)	34,040	
FROM STRUCTURE QUANTITY LIST (INCLUDES DITCH EXCAVATION)	2,316	
FROM WETLAND MITIGATION CONSTRUCTION	842	
ESTIMATE FOR CUT SLOPE TREATMENT	2,890	
BORROW (FROM CONTRACTOR'S SOURCE)	26,176	
TOTAL	66,264	
EMBANKMENT (NET)		
ROADWAY	59,799	
FROM STRUCTURE QUANTITY LIST	441	
TOTAL	60,240	
EMBANKMENT X FACTOR (1.10)		
ROADWAY	65,779	
FROM STRUCTURE QUANTITY LIST	485	
TOTAL	66,264	

EARTHWORK NOTES:

1. EMBANKMENT MATERIAL (C.I.P.) (SPECIAL) SHALL HAVE A MINIMUM M_R VALUE OF 18865 psi. (R 61).
2. EMBANKMENT MATERIAL (C.I.P.) DOES NOT REQUIRE A MINIMUM M_R VALUE.

TABULATION OF GALVANIZED PIPE IRRIGATION SLEEVING

LOCATION	SIDE	GALVANIZED PIPE IRRIGATION SLEEVING 4 INCH (LIN FT) PLAN	4 INCH AS CONST.	6 INCH (LIN FT) PLAN	6 INCH AS CONST.
SH47					
STA. 119+55 ~ STA. 120+75	85' LT.	120		120	
STA. 148+70	166' LT.	35		35	
STA. 152+50	163' LT.	40		40	
TROY AVE. RAMP B					
STA. 719+30	LT. & RT.	30		30	
TOTAL		225		225	

SUMMARY OF EARTHWORK QUANTITIES
AND TABULATION OF FENCING & IRRIGATION SLEEVING

NO CONSTRUCTION			FED. ROAD REGION	DIVISION	PROJECT NO	SHEET NO	SHEET TOTALS
NO REVISIONS	REV SEC	VOID	VI	COLORADO	STA 0471-020	13	

SURFACING PLAN

STATION TO STATION	SIDE	REMOVAL OF ASPHALT MAT	Ø QUANTITY – TONS																		QUANTITY – GALLONS		REMARKS
			* HOT BITUMINOUS PAVEMENT (GRADING C) (ASPHALT) (C100)																HBP (PATCHING) (HAUL & ASPHALT)		EMULSIFIED ASPHALT (SLOW SETTING)		
			OVERLAY						FULL DEPTH CONSTRUCTION														
			TRANSITION (VARIES)		BOTTOM LIFT (2")		TOP LIFT (2")		BOTTOM LIFT (2 1/2")		BOTTOM LIFT (2")		MIDDLE LIFT (2 1/2")		MIDDLE LIFT (2")		TOP LIFT (2")						
		SQ. YD.	PLAN	AS CONST.	PLAN	AS CONST.	PLAN	AS CONST.	PLAN	AS CONST.	PLAN	AS CONST.	PLAN	AS CONST.	PLAN	AS CONST.	PLAN	AS CONST.	PLAN	AS CONST.	PLAN	AS CONST.	
SH 47																							
70+50 TO 72+50	LT.	967	319																		48		
72+50 TO 86+00	LT.	●2950			776		776														353		●ASPH REMOVAL FROM MEDIAN
86+00 TO 133+00	LT.				2315		2315														105		
133+00 TO 165+00	LT.	●3232			1747		1747														794		●ASPH REMOVAL FROM MEDIAN
165+00 TO 182+00	LT.				811		811														369		
182+00 TO 191+07.29	LT.				330		330														150		
191+07.29 TO 193+34.97	LT.	812	268																		41		
149+43 TO 151+38	LT.	224																	36				ABUT 1 & 2 APPROACH SLAB REHAB
70+50 TO 73+79.59	RT.	809							192				192				154				70		
73+79.59 TO 86+00	RT.	571							869				869				695				316		
86+00 TO 133+00	RT								2705				2705				2164				984		
133+00 TO 172+38.55	RT.	2212							2646				2646				2117				962		
172+38.55 TO 182+00	RT								558				558				447				203		
182+00 TO 191+07.29	RT								343				343				274				125		
JERRY MURPHY RAMP B																							
OVERLAY							95														43		
302+85 TO 306+78.78		1234									121				121		121				55		
JERRY MURPHY RAMP D																							
OVERLAY							205														92		
TROY AVENUE RAMP A																							
708+47.94 TO 711+50		949									93						93				42		
TROY AVENUE RAMP B																							
OVERLAY							303														138		
726+70 TO 727+38.76		231									21				21		21				10		
TROY AVENUE RAMP C																							
OVERLAY							252														115		
TROY AVENUE RAMP D																							
OVERLAY							285														130		
QUANTITIES FROM STRUCTURES																			68				
SUBTOTALS			587		5979		7117		7313		235		7313		142		6086		104		5145		
LEVELING					2990																		
IRREGULARITIES (10%)									731		24								11		515		
TOTALS			587		8969		7117		8044		259		7313		142		6086		115		5660		
PROJECT TOTALS		14191									38517								115		5660		

* NOTE PAVEMENT SMOOTHNESS CATEGORY FOR THIS PROJECT SHALL BE CATEGORY 2.

Ø . FROM CONTRACTOR'S SOURCE

INITIAL	DATE	
		CHECKED BY
		QUANTITIES BY
		CHECKED BY
DESIGNED BY		
CHECKED BY		
DETAILED BY		

STATE OF COLORADO
STATE DEPARTMENT OF TRANSPORTATION
DIVISION OF HIGHWAYS
C.D.O.T. FORM 128
REV. JUNE 13, 1994

AS CONSTRUCTED			FEDERAL ROAD REGION NO.	DIVISION	PROJECT NO.	SUB ACCOUNT	SHEET NO.
NO REVISIONS	REVISED	VOID	VIII	COLORADO	STA 0471-020		14

To establish geometric control for the construction of this project, the Department has provided the following information:

	Format*
■ Horizontal Control	Plans
■ Vertical Control	Plans
■ Roadway Alignment	Plans
■ Original Terrain Data	Cross Sections
☐ Other:	

*Specify the information format, ie. plan sheet, computer disk, computer printout, or other.

The information marked is either contained on the plans or is available from the Engineer.

TYPE OF PROJECT

- ■ Landscaping
- ☐ Signalization
- ☐ Safety Improvement
- ■ Asphalt Overlay
- ☐ Concrete Overlay
- ☐ Minor Widening
- ☐ Major Reconstruction
- ■ New Roadway Construction
- ☐ Bridge Replacement
- ☐ Bridge Widening
- ■ New Bridge
- ☐ Other:

WORK PERFORMED BY OTHERS: Utility Relocation

WORK PERFORMED BY THE CONTRACTOR'S SURVEYOR UNDER ITEM 625:

- ■ Establish project control
- ■ Verification and Maintenance of Horizontal and Vertical Control
- ■ Verify or Determine existing grades and alignments
- ■ Verify or Determine existing topography
- ■ Clearing and Grubbing Limits
- ■ Removal Limits
- ■ Excavation and Embankment
  - ■ Excavation
    - ■ Unclassified
    - ☐ Stripping
    - ☐ Muck
    - ☐ Rock
    - ■ Borrow
    - ☐ Other
  - ■ Embankment
  - ■ Site Grading
  - ☐ Erosion Control (Perm)
  - ☐ Other
- ■ Landscaping
  - ■ Topsoil
  - ■ Seeding
  - ■ Mulching
  - ■ Planting
  - ■ Other: Sprinkler Irrigation
- ■ Erosion Control
  - ☐ Seeding (Temp)
  - ■ Silt Fences
  - ■ Straw Bales
  - ☐ Temporary Berm
  - ☐ Riprap (Temp)
  - ☐ Other (Temp Diversion, Temp Slope Drain, Bush Barrier, Check Dam, Other)

	SLOPE STAKING	GRID	GRADE STAKES	SPECIAL INTERVAL
Excavation				
Unclassified	Yes		Yes	50'
Stripping				
Muck				
Rock				
Borrow	Yes		Yes	50'
Other				
Embankment	Yes		Yes	50'
Site Grading			Yes	
Erosion Control (Perm)				
Other				

	BLUE TOPS	GRID	SPECIAL INTERVAL
Roadway Bases			
Untreated Subgrade	Yes		50'
Treated Subgrade			
Aggregate Base Course			
Other			
Pavements			
PMBB - Plant Mix Bituminous Base	Yes		50'
HBP - Hot Bituminous Pavement			
Concrete			
Other			

- ■ Roadway Elements
  - ☐ Curb and Gutter
  - ■ Drop Inlets - alignment and grades
  - ■ Retaining Walls
  - ■ Guard Rail
  - ☐ Sidewalk
  - ☐ Other
- ■ Riprap (Perm)
- ■ Slope and Ditch Paving
- ■ Minor Structures
  - ☐ Structure Excavation limits
  - ■ Culverts
  - ☐ Culverts w/ Headwalls and Wingwalls
  - ☐ Concrete Box Culverts w/ Headwalls and Wingwalls
  - ■ Pipes
    - ☐ Sanitary Sewer
    - ☐ Storm Sewer
    - ☐ Water
    - ■ Irrigation
    - ☐ Miscellaneous
  - ☐ Manholes
  - ■ Inlets
  - ☐ Other
- ■ Major Structures - Overhead Signs, Concrete Box Culverts, Bridges, and all other structures assigned a structure number
  - ■ Structure Excavation limits
  - ☐ Concrete Box Culverts w/ Headwalls and Wingwalls
  - ■ Piling locations and cut off elevations
  - ☐ Caisson locations and elevations
  - ■ Footing locations, alignment, and elevations
  - ■ Abutment/Pier alignment
  - ■ Abutment form locations
  - ■ Wingwall skew angles/offsets
  - ■ Structural concrete form locations
  - ■ Substructure survey (See revision or Supplemental SC - 2 form)
  - ■ Bridge expansion joints alignment and grade (longitudinal and transverse)
  - ■ Girder 10th or 10th point locations and elevations
  - ■ Slope and Ditch Paving
- ☐ Fencing
  - ☐ Temporary
  - ☐ Permanent
  - ☐ Sound Barriers
  - ☐ Other
- ■ Delineators
  - ☐ Temporary
  - ■ Permanent
- ■ Lighting and Traffic Control Devices (Perm)
  - ☐ Signal pole locations and elevations
  - ■ Light pole locations and elevations
  - ☐ Signs
  - ■ Field verify sign post locations, elevations and lengths before fabrication
  - ☐ Other
- ■ Pavement Marking
  - ■ Striping (Temp)
  - ■ Striping (Perm)
  - ■ Symbols
  - ☐ Other
- ■ Temporary Lighting and Construction Traffic Control Devices
  - ☐ Signal pole locations and elevations (Temp)
  - ☐ Light pole locations and elevations (Temp)
  - ■ Signs (Temp)
  - ■ Other: Construction Traffic Control Devices
- ■ Easement (Temp)(Staking)

WORK PERFORMED BY THE CONTRACTOR'S SURVEYOR UNDER ITEM 629:

- ■ Monumentation
  - ☐ Control
  - ☐ Right of Way (Temp) (Staking)
  - ☐ Right of Way
  - ☐ Land corners, aliquot corners
  - ☐ Easement (Temp)(Staking)
  - ☐ Easement (Perm)
  - ☐ Reference the specified existing monuments
  - ■ Relocate the specified existing monuments 9 TYPE 1 CONTROL MONUMENTS
  - ☐ Locate monuments. It is estimated ____ hours are required.

GENERAL NOTES:

All work shall be done in accordance with the CDOT Survey Manual.

Adequate information for establishing lines, grades, and locations for all work items have been specified on the plans. Any additional information required to stake the item or element shall be generated by the Contractor's surveyor.

The Contractor's surveyor shall provide an estimate of the man-hours necessary to complete the work items indicated on this sheet. A copy of this sheet, with the estimated man-hours written on the blank line to the left of the specified items, shall be submitted with the survey schedule to the Engineer at the Presurvey Conference.

The following surveying notebooks are required:

- ■ Alignment Notebook
- ■ Benchmark Notebook
- ■ Control Survey/Monumentation Notebook
- ■ Minor Structure Notebook
- ■ Major Structure Notebook
- ■ Slope Staking Notebook
- ■ Grade Notebook
- ■ Miscellaneous Notebook(s)

Stakes and Monuments set by CDOT forces which are damaged or destroyed by the progress of construction shall be replaced by the Contractor at no additional cost to the Department.

The Contractor shall furnish or "be staked" earth work quantity to the Engineer prior to completion of twenty percent (20%) of the planned earth work in any phase as per the CDOT Survey Manual. The Contractor shall field verify original ground cross sections at maximum 500 ft (150 m) intervals.

The Contractor shall coordinate construction staking of the project with any utility work.

The Contractor shall perform any field surveying and calculations necessary to tie plan grades into field grades.

COLORADO
DEPARTMENT OF TRANSPORTATION

SURVEY TABULATION SHEET

JUNE 1994

FED. ROAD REGION	STATE	PROJECT NO.	SHEET NO.	SHEET TOTALS
	COLORADO	STA 0471-020	15	

LOCATION: S.H. 47
PUEBLO COUNTY, COLORADO
T. 20 S., R. 64 W.

SURVEY CONTROL SYSTEM

POINT NO.	NORTHING	EASTING	ELEVATION	DESCRIPTION
1001	599397.051	259574.068	4784.81	CONTROL MONUMENT ~ M.P. 0.88
1002	599203.595	260139.790	4783.37	CONTROL MONUMENT ~ M.P. 0.98
1003	599425.861	260481.853	4792.03	CONTROL MONUMENT ~ M.P. 1.04
1004	599325.069	260827.618	4798.29	SPIKE ~ M.P. 1.11
1005	599479.062	261176.581	4812.43	CONTROL MONUMENT ~ M.P. 1.18
1006	599315.340	261541.694	4814.40	SPIKE ~ M.P. 1.25
1007	599315.964	261949.267	4831.10	CONTROL MONUMENT ~ M.P. 1.32
1008	599062.051	262219.209	4836.16	SPIKE ~ M.P. 1.39
1009	598988.088	262574.672	4844.55	CONTROL MONUMENT ~ M.P. 1.45
1010	598701.524	262843.684	4856.36	SPIKE ~ M.P. 1.52
1011	598647.922	263212.112	4865.55	CONTROL MONUMENT ~ M.P. 1.59
1012	598376.444	263503.506	4877.36	SPIKE ~ M.P. 1.66
1013	598350.562	263855.827	4898.33	CONTROL MONUMENT ~ M.P. 1.72
1014	597955.843	264081.513	4899.90	CONTROL MONUMENT ~ M.P. 1.79
1015	598012.115	264481.200	4906.90	CONTROL MONUMENT ~ M.P. 1.85
1016	597707.058	264574.572	4900.20	CONTROL MONUMENT ~ M.P. 1.89
1017	597751.141	265021.759	4899.77	CONTROL MONUMENT ~ M.P. 1.96
1018	597453.522	265053.812	4882.71	CONTROL MONUMENT ~ M.P. 1.99
1019	597513.351	265431.947	4887.17	CONTROL MONUMENT ~ M.P. 2.05
1020	597231.986	265675.773	4851.87	SPIKE ~ M.P. 2.11
1021	597132.232	266040.067	4837.93	CONTROL MONUMENT ~ M.P. 2.18
1022	596825.695	266279.853	4827.79	SPIKE ~ M.P. 2.25
1023	596768.893	266679.929	4822.87	CONTROL MONUMENT ~ M.P. 2.33
1024	596269.816	266936.322	4803.22	PK NAIL ON WATER VAULT ~ M.P. 2.41
1025	596670.76	267397.875	4796.65	CONTROL MONUMENT ~ M.P. 2.52
1026	596218.469	267576.752	4809.71	SPIKE ~ M.P. 2.52
1027	596127.872	257974.837	4793.18	CONTROL MONUMENT ~ M.P. 2.60
1028	595817.573	268169.302	4784.25	SPIKE ~ M.P. 2.66
1029	595762.574	268553.724	4771.06	CONTROL MONUMENT ~ M.P. 2.73
1030	595374.578	268898.564	4762.73	CONTROL MONUMENT ~ M.P. 2.82
1031	595469.482	269201.610	4764.70	CONTROL MONUMENT ~ M.P. 2.88
1032	595102.727	269400.469	4758.17	CONTROL MONUMENT ~ M.P. 2.93
1033	595109.283	269870.578	4766.27	CONTROL MONUMENT ~ M.P. 3.00
1034	594818.155	269934.464	4760.96	CONTROL MONUMENT ~ M.P. 3.03
1035	594782.735	270478.150	4773.00	CONTROL MONUMENT ~ M.P. 3.13
1036	594423.355	270836.292	4777.82	CONTROL MONUMENT ~ M.P. 3.19
1037	594455.758	271078.147	4789.90	CONTROL MONUMENT ~ M.P. 3.23
1038	593865.652	270982.631	4776.35	CONTROL MONUMENT ~ M.P. 3.33
1039	594247.438	271469.311	4794.82	CONTROL MONUMENT ~ M.P. 3.36
1040	593267.706	271319.236	4789.01	CONTROL MONUMENT ~ M.P. 3.47
1041	592996.348	271743.645	4768.50	CONTROL MONUMENT ~ M.P. 3.55
1042	592628.781	271505.298	4757.74	CONTROL MONUMENT ~ M.P. 3.61
1043	592289.827	271727.783	4751.97	CONTROL MONUMENT ~ M.P. 3.68
1044	591943.559	271562.632	4746.42	CONTROL MONUMENT ~ M.P. 3.75
1045	591590.136	271748.387	4742.19	CONTROL MONUMENT ~ M.P. 3.81
1046	591242.105	271563.790	4739.30	CONTROL MONUMENT ~ M.P. 3.88
1047	590915.382	271805.663	4733.63	CONTROL MONUMENT ~ M.P. 3.94
1048	590469.251	271582.357	4730.22	CONTROL MONUMENT ~ M.P. 4.02
1049	590065.711	271801.849	4719.55	CONTROL MONUMENT ~ M.P. 4.10
1050	589769.059	271597.747	4735.42	CONTROL MONUMENT ~ M.P. 4.15
1051	589482.338	271997.141	4718.18	CONTROL MONUMENT ~ M.P. 4.21
1052	589145.814	271618.065	4692.55	CONTROL MONUMENT ~ M.P. 4.27
1053	588805.009	271796.089	4702.72	CONTROL MONUMENT ~ M.P. 4.33
1054	588706.208	271565.418	4679.27	CONTROL MONUMENT ~ M.P. 4.38
1055	588324.180	271724.602	4696.13	CONTROL MONUMENT ~ M.P. 4.43
1056	588179.469	271438.144	4667.16	CONTROL MONUMENT ~ M.P. 4.46
1057	587812.671	271542.847	4686.06	CONTROL MONUMENT ~ M.P. 4.53
1058	587466.383	270883.320	4653.38	SPIKE SH50 ~ M.P. 318.64
1059	587248.346	271116.615	4666.17	CONTROL MONUMENT SH96 ~ M.P. 58.77
1060	587188.813	270502.793	4657.55	CONTROL MONUMENT SH96 ~ M.P. 58.67
1061	586794.353	270572.747	4653.05	CONTROL MONUMENT SH96 ~ M.P. 58.64
1062	586713.443	270203.488	4655.35	CONTROL MONUMENT SH96 ~ M.P. 58.58
1063	586374.708	270016.518	4659.71	CONTROL MONUMENT SH96 ~ M.P. 58.51
1064	588047.958	270014.651	4672.31	CONTROL MONUMENT SH50 ~ M.P. 318.45
1065	588268.285	270046.253	4675.20	CONTROL MONUMENT SH50 ~ M.P. 318.43
1066	587637.906	270495.629	4664.24	CONTROL MONUMENT SH50 ~ M.P. 318.57
1067	587837.863	270601.257	4666.08	CONTROL MONUMENT SH50 ~ M.P. 318.56
1068	587077.444	271469.354	4647.31	CONTROL MONUMENT SH50 ~ M.P. 318.73
1069	587192.773	271761.837	4662.43	CONTROL MONUMENT SH50 ~ M.P. 318.76
1070	586773.614	272041.854	4639.73	CONTROL MONUMENT SH50 ~ M.P. 318.85
1071	586562.820	272631.320	4634.12	CONTROL MONUMENT SH50 ~ M.P. 318.96
1074	599329.761	258938.481	4764.12	CONTROL MONUMENT ~ M.P. 0.69
1075	599050.090	258305.021	4751.15	CONTROL MONUMENT ~ M.P. 0.64
1076	598964.840	257683.227	4746.85	CONTROL MONUMENT ~ M.P. 0.52
1077	598986.631	255904.342	4765.78	CONTROL MONUMENT ~ M.P. 0.27
1078	598399.804	255317.657	4757.51	CONTROL MONUMENT ~ M.P. 101.26
1079	599752.229	255393.611	4750.16	CONTROL MONUMENT ~ M.P. 101.32
1080	599220.756	255166.641	4770.98	CONTROL MONUMENT ~ M.P. 101.42
1090	598950.047	256305.197	4765.55	CONTROL MONUMENT ~ M.P. 0.35
2026	598872.910	255073.606	4763.06	CONTROL MONUMENT ~ M.P. 101.37

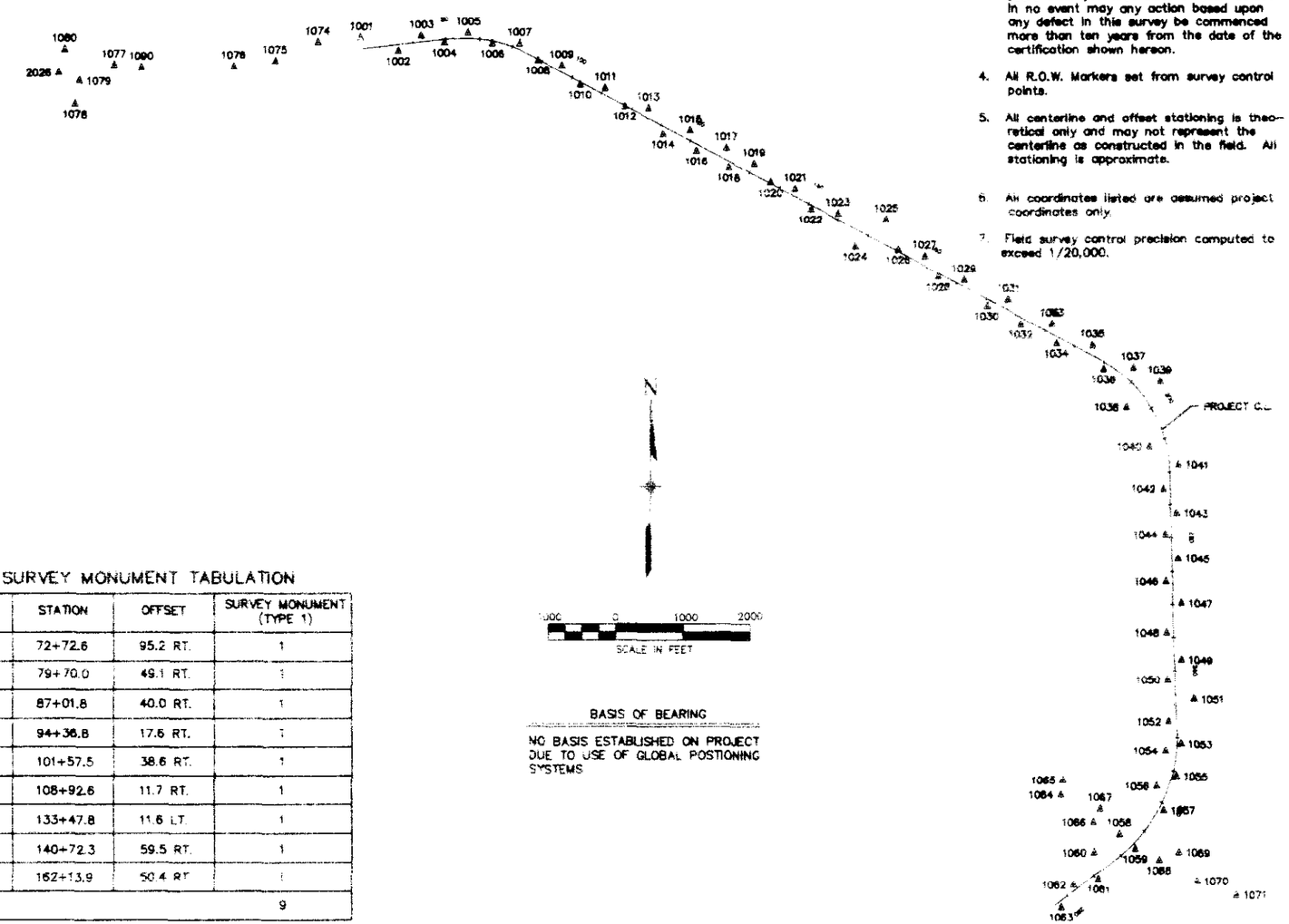

BASIS OF BEARING

NO BASIS ESTABLISHED ON PROJECT DUE TO USE OF GLOBAL POSTIONING SYSTEMS

SURVEY MONUMENT TABULATION

POINT NO.	STATION	OFFSET	SURVEY MONUMENT (TYPE 1)
1002	72+72.6	95.2 RT.	1
1004	79+70.0	49.1 RT.	1
1006	87+01.8	40.0 RT.	1
1008	94+36.8	17.6 RT.	1
1010	101+57.5	38.6 RT.	1
1012	108+92.6	11.7 RT.	1
1020	133+47.8	11.6 LT.	1
1022	140+72.3	59.5 RT.	1
1028	162+13.9	50.4 RT.	1
TOTAL			9

MATERIALS FOR SURVEY MONUMENT TYPE 1 SHALL BE SUPPLIED BY CDOT.

GENERAL NOTES

1. This Right of Way plan is not a complete boundary survey of all adjoining owners and is prepared for Highway Department purposes only.
2. Survey Control Points set with a higher degree of accuracy than R.O.W. Markers.
3. NOTICE: According to Colorado law you must commence any legal action based upon any defect in this survey within three years after you first discover such defect. In no event may any action based upon any defect in this survey be commenced more than ten years from the date of the certification shown hereon.
4. All R.O.W. Markers set from survey control points.
5. All centerline and offset stationing is theoretical only and may not represent the centerline as constructed in the field. All stationing is approximate.
6. All coordinates listed are assumed project coordinates only.
7. Field survey control precision computed to exceed 1/20,000.

SURVEY CONTROL DIAGRAM

STATE OF COLORADO
STATE DEPARTMENT OF HIGHWAYS
DIVISION OF HIGHWAYS
D. O. H. FORM NO. 126
REV. FEB. 1984

PROJECT NO.	SHEET NO.	SHEET TOTALS
STA 0471-020	16	

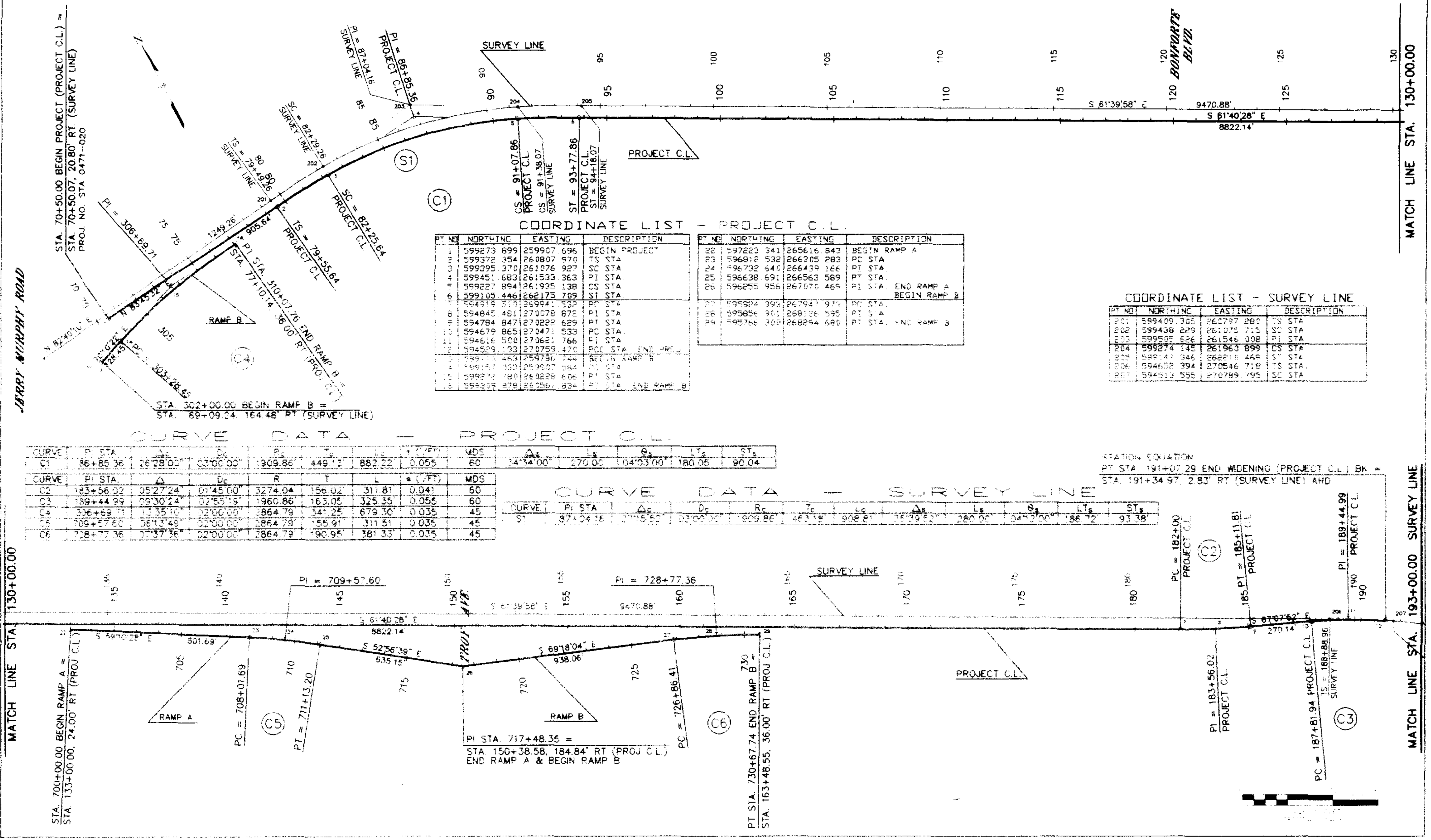

COORDINATE LIST - PROJECT C.L.

PT NO	NORTHING	EASTING	DESCRIPTION
1	599273.699	259907.696	BEGIN PROJECT
2	599372.354	260807.970	TS STA
3	599395.370	261076.927	SC STA
4	599451.683	261533.363	PI STA
5	599227.894	261935.138	CS STA
6	599105.446	262175.709	ST STA
7	594919.510	269941.532	PC STA
8	594845.481	270078.872	PI STA
9	594784.847	270222.629	PI STA
10	594679.865	270471.533	PC STA
11	594616.500	270621.766	PI STA
12	594529.133	270759.470	PCC STA END PROJ
13	599113.463	259750.744	BEGIN RAMP B
14	599157.032	259907.584	PC STA
15	599278.780	260228.606	PI STA
16	599309.878	260567.834	PI STA END RAMP B

PT NO	NORTHING	EASTING	DESCRIPTION
22	597223.341	265616.843	BEGIN RAMP A
23	596812.532	266305.283	PC STA
24	596732.640	266439.166	PI STA
25	596638.691	266563.589	PT STA
26	596255.956	267070.469	PI STA. END RAMP A BEGIN RAMP B
27	595924.393	267947.973	PC STA
28	595856.901	268126.595	PI STA
29	595766.300	268294.680	PT STA. END RAMP B

COORDINATE LIST - SURVEY LINE

PT NO	NORTHING	EASTING	DESCRIPTION
201	599409.305	260797.280	TS STA
202	599438.229	261075.715	SC STA
203	599505.626	261546.008	PI STA
204	599274.145	261960.899	CS STA
205	599147.346	262218.468	ST STA
206	594652.394	270546.718	TS STA
207	594513.555	270789.795	SC STA

CURVE DATA — PROJECT C.L.

CURVE	PI STA	Δ_c	D_c	R_c	T_c	L_c	e (/FT)	MDS	Δ_s	L_s	θ_s	LT_s	ST_s
C1	86+85.36	26°28'00"	03°00'00"	1909.86'	449.13'	882.22'	0.055	60	34°34'00"	270.00'	04°03'00"	180.05'	90.04

CURVE	PI STA.	Δ	D_c	R	T	L	e (/FT)	MDS
C2	183+56.02	05°27'24"	01°45'00"	3274.04'	156.02'	311.81'	0.041	60
C3	189+44.99	09°30'24"	02°55'19"	1960.86'	163.05'	325.35'	0.055	60
C4	306+69.71	13°35'10"	02°00'00"	2864.79'	341.25'	679.30'	0.035	45
C5	709+57.60	06°13'49"	02°00'00"	2864.79'	155.91'	311.51'	0.035	45
C6	728+77.36	07°37'36"	02°00'00"	2864.79'	190.95'	381.33'	0.035	45

CURVE DATA — SURVEY LINE

CURVE	PI STA	Δ_c	D_c	R_c	T_c	L_c	Δ_s	L_s	θ_s	LT_s	ST_s
S1	87+04.16	27°15'52"	03°00'00"	1909.86'	463.18'	908.81'	35°39'52"	280.00'	04°12'00"	186.72'	93.38'

DESIGNED BY		INITIAL	DATE	CHECKED BY
CHECKED BY				QUANTITIES BY
DETAILED BY				CHECKED BY

VIEW NAME: SHT1
DRAWING NAME: C:\DATA\1718\CADD\ROAD\GEOMETRY
DATE: 08-24-1995
TIME: 14:29:48

GEOMETRIC CONTROL LAYOUT

STATE OF COLORADO
STATE DEPARTMENT OF HIGHWAYS
DIVISION OF HIGHWAYS
D.O.H. FORM NO. 1128
REV. FEB. 1984

FED. AID PROJ. REGION	DIVISION	PROJECT NO.	SHEET NO.	SHEET TOTALS
	FOUR-ADY	STA 0471-020	18	

REVISIONS		

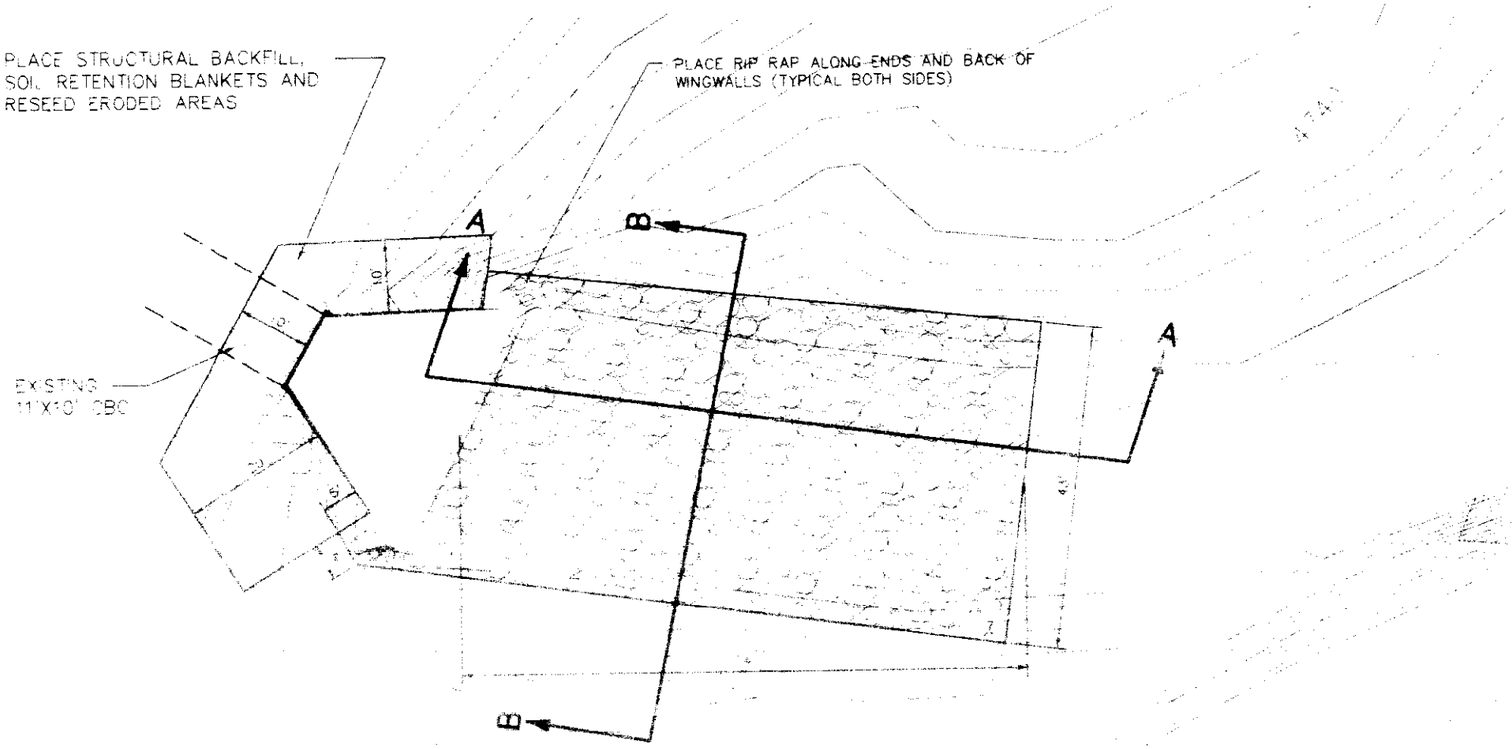

OUTLET PLAN
STA. 178+50, RT.

NOTES:

THE FOLLOWING APPROXIMATE QUANTITIES ARE REQUIRED FOR THIS STRUCTURE (CARRIED TO STRUCTURE QUANTITIES SHEET)

STRUCTURE EXCAVATION	469 CY
STRUCTURE BACKFILL (CLASS A)	278 CY
FILTER MATERIAL (CLASS A)	43 CY
320 TEXTILE EROSION CONTROL (CLASS A)	460 SY
RIPRAP (24 INCH)	469 CY
SOIL RETENTION BLANKET (SPECIAL)	225 CY

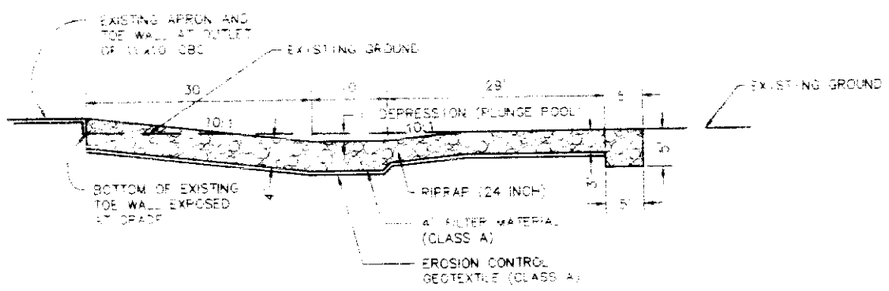

SECTION A-A

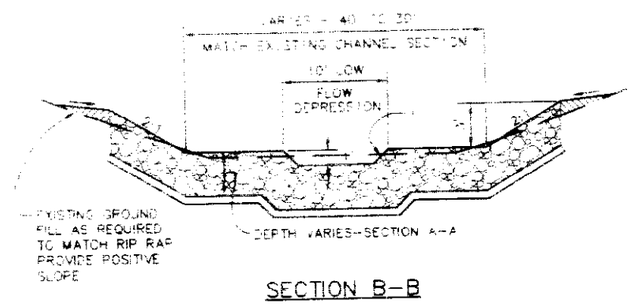

SECTION B-B

OUTLET PAVING DETAIL

STA. 178+50 - 11'x10' CBC OUTLET

DESIGNED BY
CHECKED BY
DETAILED BY
INITIAL DATE
CHECKED BY
QUANTITIES BY
CHECKED BY
DATE 10-28-90
TIME
DRAWING NAME: C:\DATA\778\GARD\ROAD\SECTIONS
VIEW NAME

OUTLET PAVING DETAIL - 178+50

FOR STATE HIGHWAY USE ONLY				FED. AID PROJ. REGION	PLAN & ON	PROJECT NO.	SHEET NO.	SHEET TOTALS
INITIAL	DATE	INITIAL	DATE	-	COLORADO	STA 0471-020	19	

REVISIONS

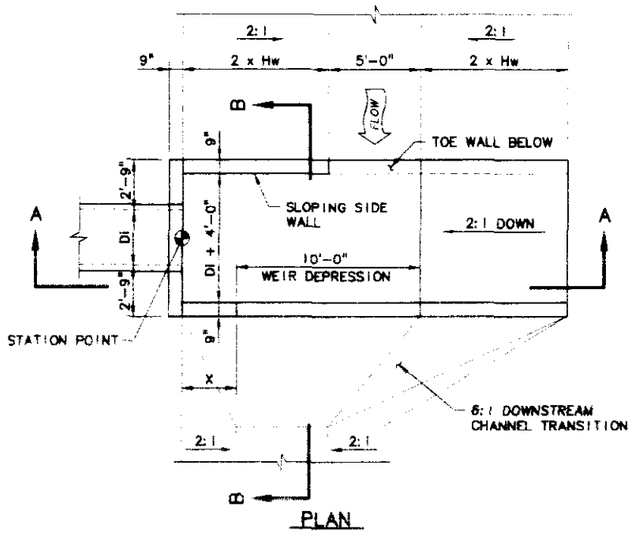

PLAN

DIVERSION STRUCTURE DETAIL

STA. 76+29.7, RT
STA. 86+24.7, RT
STA. 91+23.7, RT.

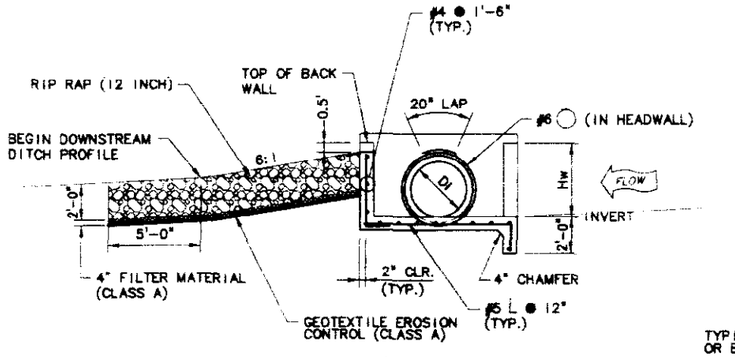

SECTION B-B

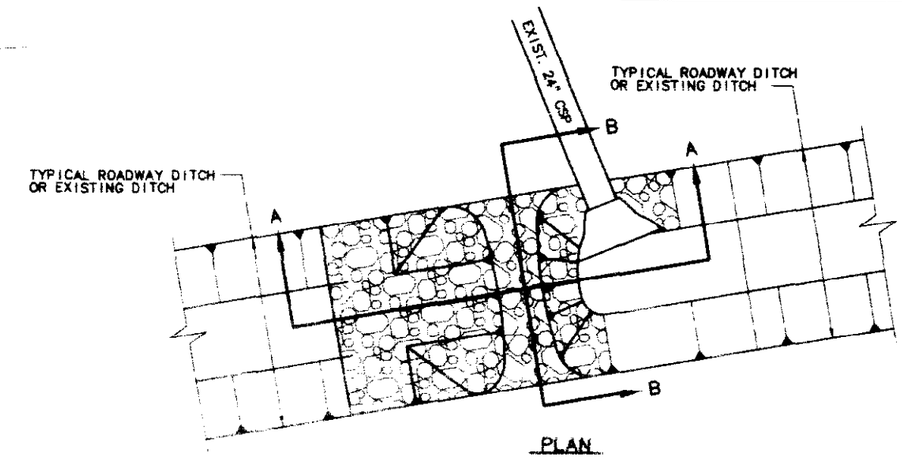

PLAN

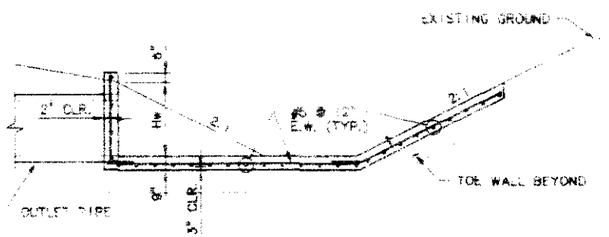

SECTION A-A

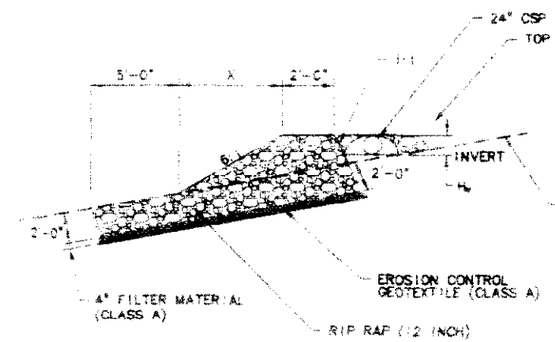

SECTION A-A

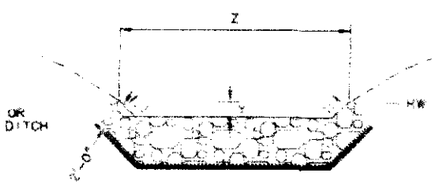

SECTION B-B

RIPRAP BERM DETAIL

RIP RAP BERM STRUCTURE NOTES

STRUCTURE EXCAVATION AND BACKFILL FOR RIP RAP BERM STRUCTURES WILL NOT BE PAID FOR SEPARATELY BUT SHALL BE INCLUDED IN THE COST OF THE WORK.

DIVERSION STRUCTURE NOTES

ALL CONCRETE SHALL BE CLASS B (MISC).

ALL REINFORCING STEEL SHALL BE GRADE 60.

UNLESS NOTED OTHERWISE, ALL REINFORCING STEEL SHALL HAVE A MINIMUM OF 2" CLEARANCE.

STRUCTURE EXCAVATION AND BACKFILL FOR DIVERSION STRUCTURES WILL NOT BE PAID FOR SEPARATELY BUT SHALL BE INCLUDED IN THE COST OF THE WORK.

EXPOSED CONCRETE CORNERS SHALL BE CHAMFORED ¾".

EXPOSED CONCRETE SURFACES SHALL RECEIVE EITHER A CLASS 2 OR CLASS 5 FINISH AT THE CONTRACTOR'S OPTION.

TABULATION OF DIVERSION STRUCTURES

STATION	INVERT	DI	Hw	X	CONCRETE CLASS B (MISC)	REINF. STEEL	RIPRAP (12 INCH)	GEOTEXTILE ERO. CTRL. (CLASS A)	FILTER MATERIAL (CLASS A)
					CU. YDS.	LBS.	CU. YDS.	SQ. YDS.	CU. YDS.
76+29.7, 56.14' RT.	4786.70	2-36"	3.85'	2.7'	11	1,063	23	35	4
86+24.7, 55' RT.	4810.12	42"	3.20'	1.4'	8	707	17	25	3
91+23.7, 55' RT. (b)	4822.93	60"x38"	3.20'	1.4'	9	856	26	39	4
TOTALS					● 28	● 2,626	▲ 66	▲ 99	▲ 11

(a) : TWIN 36" RCP (EFFECTIVE INSIDE DIMENSION = 11'-6")
(b) : 42" EQUIV. RCHEP (EFFECTIVE INSIDE DIMENSION = 8'-5")
● : QUANTITY CARRIED DIRECTLY TO SUMMARY OF APPROXIMATE QUANTITIES.
▲ : QUANTITY CARRIED TO STRUCTURE QUANTITIES LIST.

TABULATION OF RIPRAP BERM STRUCTURES

STATION	INVERT	Hw	X	Y	Z	RIPRAP (12 INCH)	GEOTEXTILE ERO. CTRL. (CLASS A)	FILTER MATERIAL (CLASS A)
						CU. YDS.	SQ. YDS.	CU. YDS.
81+13.24	4800.09	2.0'	15'	0.09'	13'	30	32	4
96+01.50	4837.29	2.1'	16'	1.3'	18'	44	46	5
107+05.38	4870.95	1.7'	13'	0.5'	20'	43	44	4
TOTALS						▲ 117	▲ 122	▲ 13

▲ : QUANTITY CARRIED TO STRUCTURE QUANTITIES LIST.

TABULATION & DETAILS OF RIPRAP BERM & DIVERSION STRUCTURES

INITIAL	DATE	
DESIGNED BY		
CHECKED BY		
DETAILED BY		
CHECKED BY		
QUANTITIES BY		
CHECKED BY		

REGION	DIVISION	PROJECT NO	SHEET NO	SHEET TOTALS
1	COLORADO	STA 0471-020	20	

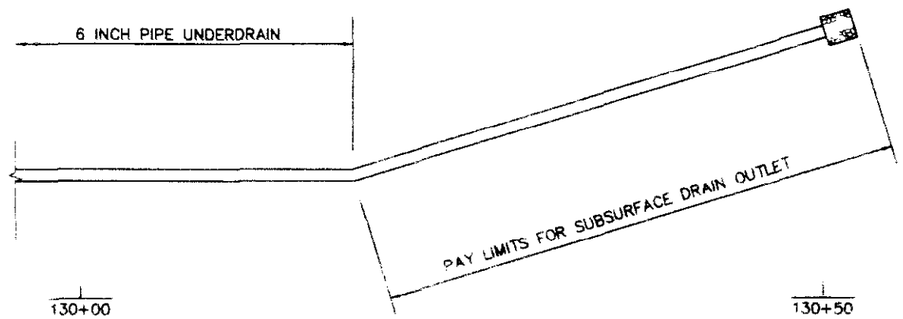

SCALE: HORIZ. 1" = 50'
VERT. 1" = 10'

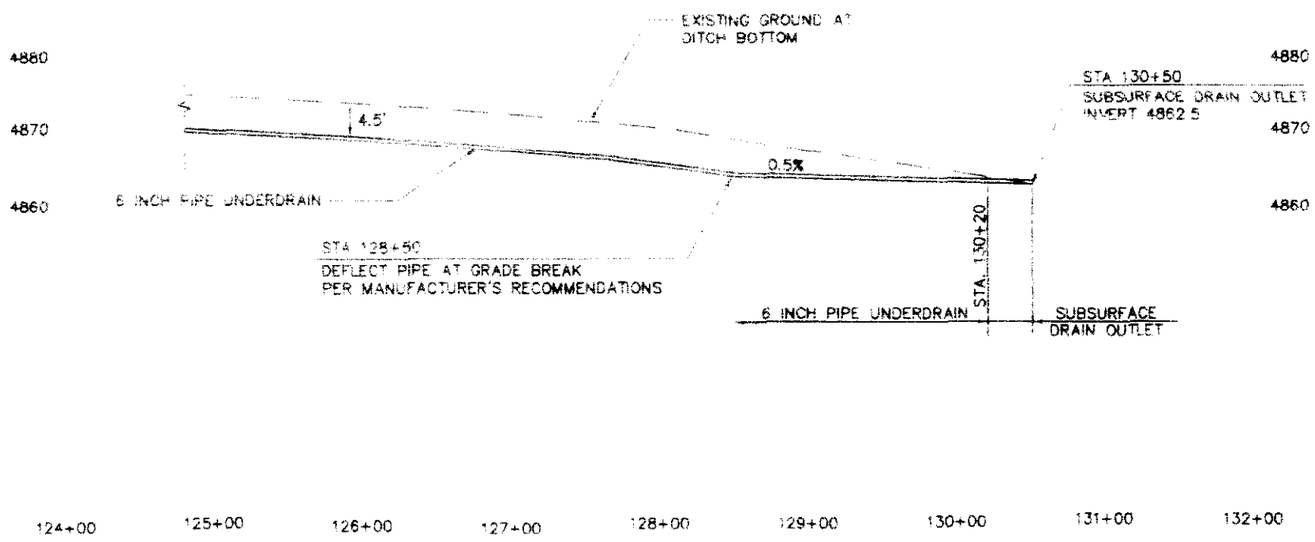

PIPE UNDERDRAIN PROFILE

PIPE UNDERDRAIN NOTES

PIPE UNDERDRAIN SHALL BE INSTALLED IN A SMOOTH ALIGNMENT ALONG THE FLOWLINE OF THE EXISTING DITCH.

STA. 115+00 TO 128+50, LT.: PIPELINE INVERT SHALL BE 4.5' MIN. BELOW EXISTING DITCH FLOWLINE – PIPELINE SLOPE SHALL BE A SMOOTH PROFILE WHICH MATCHES THE EXISTING DITCH FLOWLINE SLOPE.

STA. 128+50 TO 130+50, LT.: PIPELINE SLOPE SHALL BE 0.5% TO DAYLIGHT

SEE STANDARD PLAN M-605-1 FOR ADDITIONAL NOTES AND DETAILS

STATE DEPARTMENT OF HIGHWAYS
DIVISION OF HIGHWAYS
D. O. H. FORM NO. 117:
REV. APR. 1986

AS CONSTRUCTED		
NO REVISIONS	REVISED	VOID

FEDERAL ROAD REGION NO.	DIVISION	PROJECT NUMBER	SHEET NO.
VIII	COLORADO	STA 0471-020	21

REVISIONS		

GENERAL NOTES

Except as shown in the plans for Structure Backfill (Flow-Fill), structure excavation and backfill shall be in accordance with M-206-2 for Abutments and Wingwalls.

The information shown on these plans concerning the type and location of underground utilities is not guaranteed to be accurate or all inclusive. The contractor is responsible for making their own determination as to the type and location of underground utilities as may be necessary to avoid damage thereto. The contractor shall contact the Utility Notification Center of Colorado at 1-800-922-1987 at least 2 days (not including the day of notification) prior to any excavation or other earthwork.

The Contractor is responsible for the stability of the structure during construction.

Permanent steel bridge deck forms are optional.

All exposed concrete surfaces, excluding the top of deck shall recieve a Class 2, rubbed finish. Cost of the finish shall be included in Item 601 Concrete Class S (Bridge).

Expansion joint material shall meet AASHTO specification M213.

ABBREVIATIONS

E.F. = Each Face	Bot. = Bottom	W.P. = Work Point
F.F. = Far Face	(E) = Epoxy Coated	Eq. = Equal
No. = Number	Sta. = Station	Pvmt. = Pavement
Cont. = Continuous	B.F. = Back Face	Clr. = Clear
R = Radius	Dist. = Distance	Jt. = Joint
N.F. = Near Face	T&B = Top & Bottom	Btwn = Between
E.W. = Each Way	El. = Elevation	Spa. = Spaces
Abut. = Abutment	Dwg. = Drawing	
Typ. = Typical	Brg. = Bearing	

DESIGN DATA

AASHTO, Standard Specifications for Highway Bridge, Fifteenth Edition, 1994 Interim.

Live Load:
AASHTO HS25-44 & Alternate Military Loading.

Dead Load:
Assumes 48 lbs. per sq. ft. for bituminous pavement.
Assumes 5 lbs. per sq. ft. for Deck Forms.

Reinforced Concrete:
Class B Concrete n=9, f'c=3,000 p.s.i.

Prestressed Concrete:
Low relaxation strands meeting the requirements of ASTM416 grade 270.
Class S Concrete n=8, f'c=5,000 p.s.i.

Reinforcing Steel:
Fy = 60000 p.s.i.; All reinforcing steel shall be ASTM A615 Grade 60 and shall be non-epoxy coated unless otherwise noted.

The following table gives the minimum Class B lap splice length for reinforcing bars:

Bar Size	#4	#5	#6	#7	#8	#9	#10	#11
Splice Length for Class B .8Z Concrete	1'-3"	1'-6"	2'-0"	2'-8"	3'-6"	4'-5"	5'-7"	6'-10"
Splice Length for Class S Concrete	1'-3"	1'-6"	1'-10"	2'-2"	2'-10"	3'-7"	4'-7"	5'-7"

When the Contractor elects to substitute epoxy coated reinforcement for black steel bars, the minimum lap splice shall be as designated above. The above splice lengths shall be increased by 25% for bars spaced less than 6 inches on center or with clear cover less than 3 inches, measured in the direction of bar spacing.

Design Method: Load Factor Design

B1
A

CROSS REFERENCE DRAWING NUMBER

SECTION OR DETAIL IDENTIFICATION

INDEX OF DRAWINGS

B1 General Information
B2 Summary of Quantities
B3 General Layout
B4 Engineering Geology
B5 Construction and Foundation Layout
B6 Abutment 1 Plan and Elevation
B7 Abutment 1 Reinforcement
B8 Abutment 2 Plan and Elevation
B9 Abutment 2 Reinforcement
B10 Abutment Wingwalls and Reinforcement
B11 Superstructure Deck Reinforcement Plan
B12 Superstructure Section Details
B13 Superstructure Post Tensioning Layout
B14 Cast-in-Place Post-Tensioned Box Girder Details
B15 Cast-in-Place post-Tensioned Box Girder Details
B16 Slope Paving Details
B17 Interior Lighting (Concrete Box Girder)
B18 Bridge Rail Type 10 Special
B19 Bridge Rail Type 10 Special
B20 Bridge Rail Type 10 Special
B21 Bridge Rail Type 10 Special
B22 Bridge Drain Details
B23 Approach Slab Details
B24 Structure Backfill (Flow-Fill)
B25 Bar Lists
B26 Bridge Deck Elevations
B27 Roadway Approaches
B28 Approach Slab Retrofit Details
B29 Approach Slab Details
B30 Structure Backfill (Flow-Fill)
B31 Bridge Rail Removal and Retrofit Details

BRIDGE DESCRIPTION

1 span (167'-6") bridge
Concrete box girder, prestressed
38'-0" roadway curb to curb
1'-3" Bridge rail type 10 special

INITIAL	DATE
DESIGNED BY GHT	9/96
DRAWN BY GHT	9/96
CHECKED BY YAK	9/96
QUANTITIES BY	
DETAILED BY	
CHECKED BY	

BRW INC. 1225 LAWRENCE ST. SUITE 200 DENVER, CO 80202
PLANNING TRANSPORTATION ENGINEERING URBAN DESIGN

DEPARTMENT OF TRANSPORTATION
S.H. 47 OVER TROY AVENUE
PUEBLO, COLORADO

GENERAL INFORMATION

Designer G. Tsiouvaras	Structure Numbers	K-18-GA	
Detailer G. Tsiouvaras		K-18-EX	
Drawing Number B1 of 31 Drawings			

Revision Dates (Preliminary Stage Only)

F117B
AREA'S: NONE

VIEW NAME: PW | DRAWING NAME: C:\DATA\1718\CADD\STRUCT\TROY\479G001 | DATE: 10-24-1995 | TIME: 11:48:48

STATE OF COLORADO
STATE DEPARTMENT OF HIGHWAYS
DIVISION OF HIGHWAYS
D. O. H. FORM NO. 117
REV. APR. 1966

AS CONSTRUCTED		
NO REVISIONS	REVISED	VOID

FEDERAL ROAD REGION NO.	DIVISION	PROJECT NUMBER	SHEET NO.
VIII	COLORADO	STA 0471-020	22

REVISIONS		

SUMMARY OF QUANTITIES

STRUCTURE NO. K-18-GA

ITEM NO.	DESCRIPTION	UNIT	SUPER STRUCTURE	APPROACH SLAB	ABUT. 1	ABUT. 2	APPROACH SLAB	TOTAL
202	REMOVAL OF ASPHALT MAT (PLANING)	SY						
202	REMOVAL OF BRIDGE RAILING	LF						
206	STRUCTURE EXCAVATION	CY			64	74		138
206	STRUCTURE BACKFILL (FLOW-FILL)	CY			191	191		392
206	STRUCTURE BACKFILL (CLASS 1)	CY			237	237		474
403	HOT BITUMINOUS PAVEMENT (GRADING C) (HAUL AND ASPHALT)	TON	76	7			7	90
502	STEEL PILING (HP12X74)	LF			243	282		525
507	CONCRETE SLOPE & DITCH PAVING (REINFORCED)	CY			45	45		90
513	BRIDGE DRAIN (SPECIAL)	EACH	1					1
515	WATERPROOFING (MEMBRANE)	SY	703	60			60	823
518	BRIDGE EXPANSION DEVICE (0 - 2 INCH)	LF		38			38	76
601	CONCRETE CLASS B (BRIDGE)	CY			21	20		41
601	CONCRETE CLASS D (BRIDGE)	CY		27			27	54
601	CONCRETE CLASS S (BRIDGE)	CY	521					521
602	REINFORCING STEEL	LBS	56740	3730	9935	9870	3730	84005
602	REINFORCING STEEL (EPOXY COATED)	LBS	42210					42210
606	BRIDGE RAIL TYPE 10 SPECIAL	LF	423					423
606	BRIDGE RAIL TYPE 10R SPECIAL	LF						
613	¾ INCH ELECTRICAL CONDUIT	LF	55					55
613	2 INCH ELECTRICAL CONDUIT	LF	862					862
613	LIGHTING SYSTEM	EACH	1					1
618	PRESTRESSING STEEL WIRE OR STRAND	MKFT	2090					2090
625	CONSTRUCTION SURVEYING	LS						.15
626	MOBILIZATION	LS						.15

STRUCTURE NO. K-18-EX

APPROACH SLAB	SUPER STRUCTURE	APPROACH SLAB	TOTAL
	780		780
	414		414
108		108	216
88		88	176
7	85	7	99
66		66	132
42		42	84
30	4	30	64
4135	1405	4135	9675
	414		414
			.05
			.05

INITIAL	DATE	INITIAL	DATE
DESIGNED BY GRT	9/96	CHECKED BY GRT	9/96
CHECKED BY PHK	9/96	QUANTITIES BY GRT	9/96
DETAILED BY BDC	9/96	CHECKED BY TAR	9/96

BRW INC. 1225 LAWRENCE ST., SUITE 200, DENVER, CO 80202
PLANNING TRANSPORTATION ENGINEERING URBAN DESIGN

DEPARTMENT OF TRANSPORTATION
S.H. 47 OVER TROY AVENEUE
PUEBLO, COLORADO

SUMMARY OF QUANTITIES

Designer G. Tsiouvaras		Structure Numbers	K-18-GA
Detailer G. Tsiouvaras			K-18-EX
Drawing Number	B2 of 31 Drawings		

Revision Dates (Preliminary Stage Only)

VIEW NAME: PW | DRAWING NAME: G:\DATA\1718\CADD\STRUCT\PROT\478500 | DATE: 10-31-1995 | TIME: 10:17:46

STATE OF COLORADO
STATE DEPARTMENT OF HIGHWAYS
DIVISION OF HIGHWAYS
D. O. H. FORM NO. 117
REV APR 1966

AS CONSTRUCTED		
NO REVISIONS	REVISED	VOID

FEDERAL ROAD REGION NO.	DIVISION	PROJECT NUMBER	SHEET NO.
VIII	COLORADO	STA 0471-020	23

REVISIONS

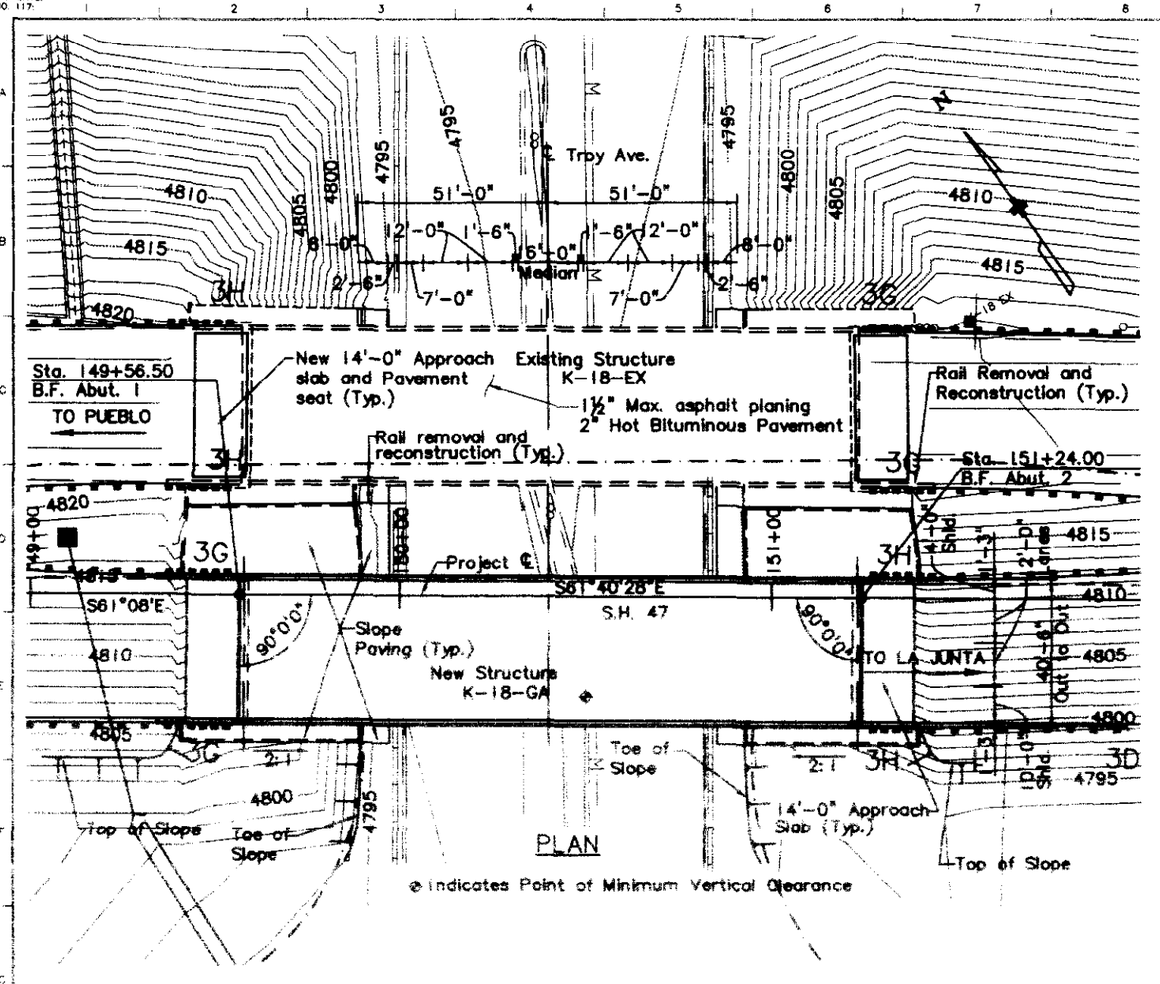

PLAN

@ indicates Point of Minimum Vertical Clearance

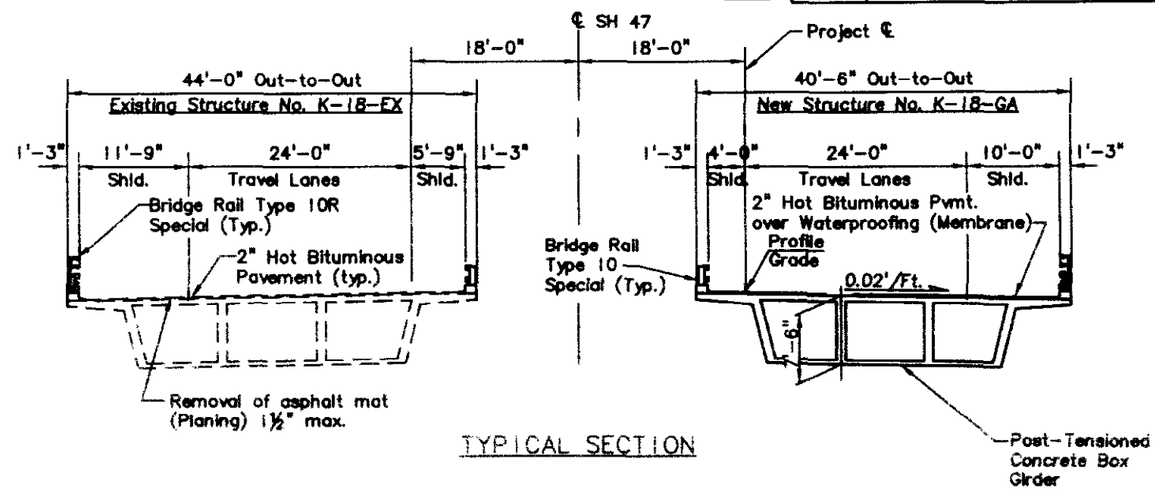

TYPICAL SECTION

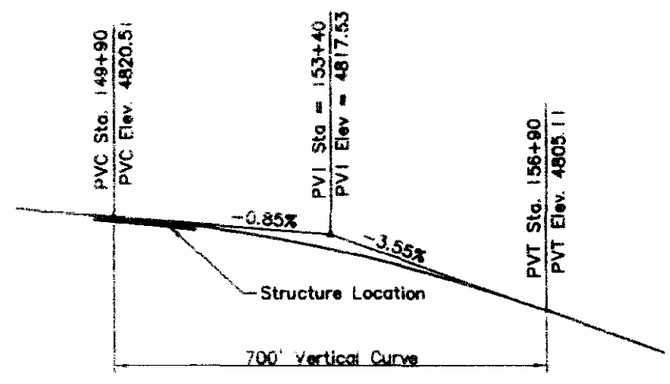

PROFILE GRADE

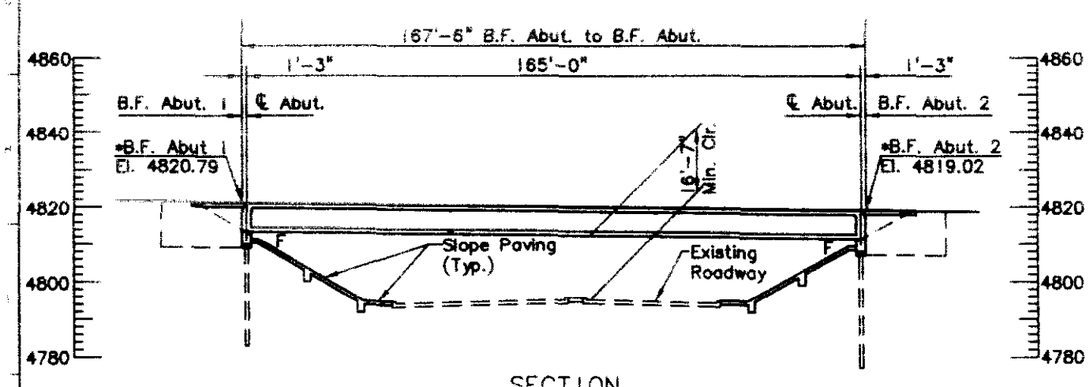

SECTION
(Taken at Project ℄)
*Finished Roadway Elevation at Project ℄.

150+00 151+00

Live Loading: HS-25 and Alternate Military Loading.

BRW INC. 1225 LAWRENCE ST., SUITE 200 DENVER, CO 80202
PLANNING TRANSPORTATION ENGINEERING URBAN DESIGN

DEPARTMENT OF TRANSPORTATION

S.H. 47 OVER TROY AVENUE
PUEBLO, COLORADO

GENERAL LAYOUT

Designer	P. Encinias	Structure Numbers	K-18-GA
Detailer	T. Rick		K-18-EX
Drawing Number	B3 of 31 Drawings		

INITIAL	DATE	INITIAL	DATE	INITIAL	DATE
DESIGNED BY GWT	9/95	CHECKED BY GWT	9/95	QUANTITIES BY GWT	9/95
CHECKED BY RDK	9/95	DETAILED BY RDK	9/95	CHECKED BY TAR	9/95

VIEW NAME: PW DRAWING NAME: C:\DATA\17-8\CADD\STRUC\TROY\47STGLA1 DATE: 10-24-1995 TIME: 10:15:15

Revision Dates (Preliminary Stage Only) 11/4/96

REFS: NONE

STATE DEPARTMENT OF HIGHWAYS
DIVISION OF HIGHWAYS
D. O. H. FORM NO. 117
REV APR. 1966

AS CONSTRUCTED		
NO REVISIONS	REVISED	VOID

FEDERAL ROAD REGION NO.	DIVISION	PROJECT NUMBER	SHEET NO.
VIII	COLORADO	STA 0471-020	24

REVISIONS		

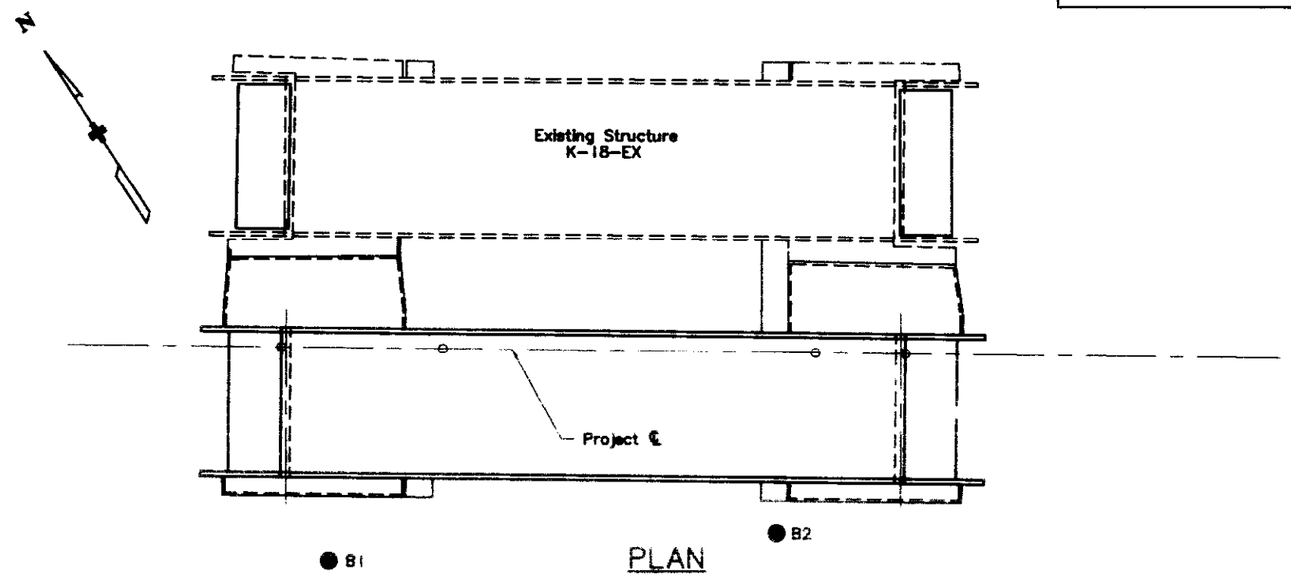

PLAN

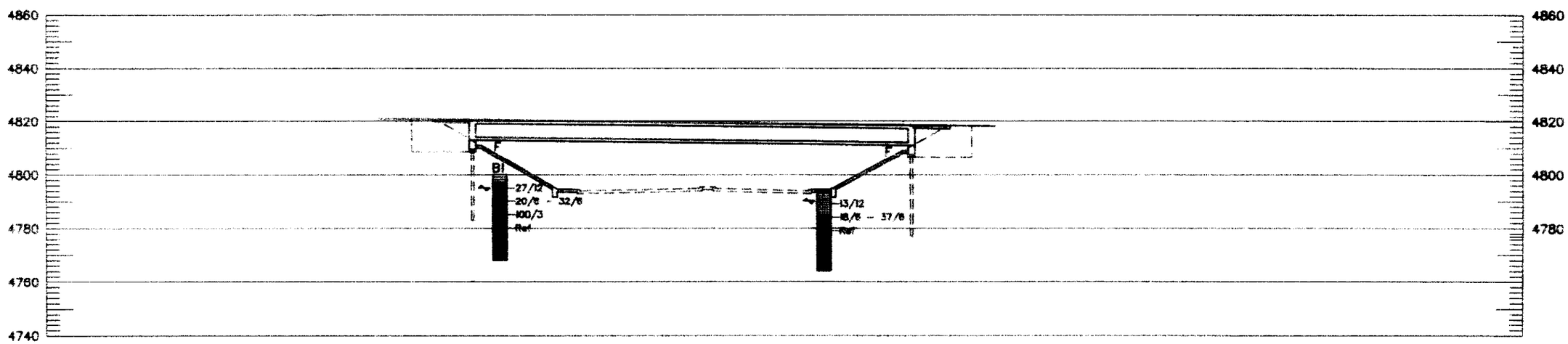

The location and top hole elevations of this test holes is approximate.

SECTION

GOODSON & ASSOCIATES, INC.
CONSULTING ENGINEERS

SUMMARY OF TEST RESULTS

Sample No.	Depth	Classification: Corps of Engrs. or Visual	Classification: AASHTO	Grading Analysis (AASHTO) Percent: Gravel	Coarse Sand	Fine Sand	Silt and Clay	Atterberg Limits: Liquid Limit Lw	Plastic Limit Pw	Plastic Index Iw	Moisture Content W %	Dry Unit Weight γ P.C.F.
B1	5	Claystone	A-7-6(28)					46	25		15.8	118.5
B2	10	Claystone									16.5	118.5

TYPE OF MATERIAL

- Base Course
- Topsoil
- Fill
- Clay
- Sand
- Sandstone
- Claystone

LEGEND

TEST BORING

- Hole Size
- Blows per Foot* / R = Refusal
- Sample Number
- Water Level
- Core Recovery / R.Q.D.
- *Standard Penetration Test (AASHTO T 206-74)

CONTINUOUS PENETRATION TEST

- 2 Inch Diameter Drive Point
- 30 Inch Free Fall
- 140 Pound Hammer
- 0, 50, 100 Blows Per Foot

- Location of Test Boring
- Location of Continuous Penetration Test
- 3" Wireline Boring
- Rotary Boring
- Auger Boring

BRW INC. 1225 LAWRENCE ST., SUITE 200, DENVER, CO 80202
PLANNING TRANSPORTATION ENGINEERING URBAN DESIGN

DEPARTMENT OF TRANSPORTATION

S.H.47 OVER TROY AVENUE
PUEBLO, COLORADO

ENGINEERING GEOLOGY

Designer	Structure Numbers	K-18-GA
Detailer K. Erickson		
Drawing Number B4 of 31 Drawings		

Revision Dates (Preliminary Stage Only)

INITIAL	DATE
DESIGNED BY GRY	9/95
CHECKED BY GRY	9/95
DETAILED BY TAR	9/95
CHECKED BY	
QUANTITIES BY	
CHECKED BY	

F1178

SCALE: NONE

VIEW NAME: PW | DRAWING NAME: C:\DATA\1718\CADD\STRUC\TROY\47BEG01 | DATE: 10-24-1995 | TIME: 10:17:36

STATE OF COLORADO
STATE DEPARTMENT OF HIGHWAYS
DIVISION OF HIGHWAYS:
D. O. H. FORM NO. 117:
REV. APR. 1986

AS CONSTRUCTED		
NO REVISIONS	REVISED	VOID

FEDERAL ROAD REGION NO.	DIVISION	PROJECT NUMBER	SHEET NO.
VIII	COLORADO	STA 0471-020	25

REVISIONS		

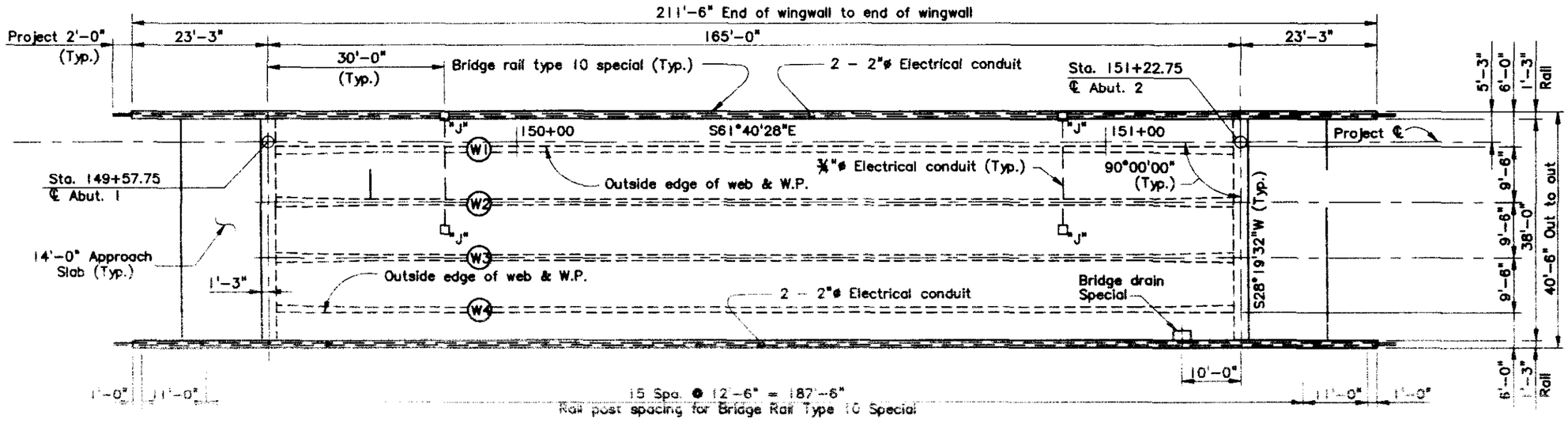

CONSTRUCTION LAYOUT

NOTE: See Dwg. B18 to B21 for bridge rail details

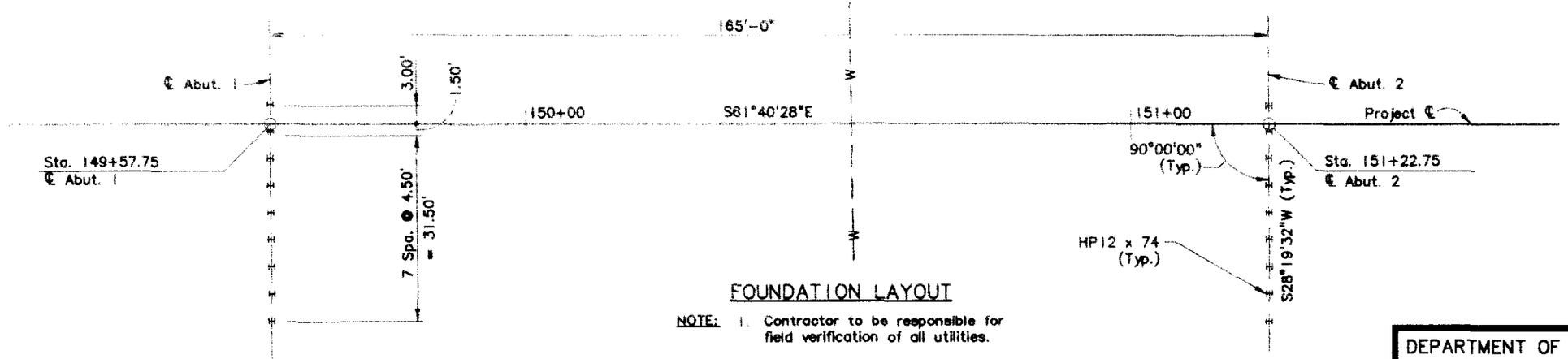

FOUNDATION LAYOUT

NOTE:

1. Contractor to be responsible for field verification of all utilities.
2. "J" = 6"x 6"x 4" junction box flush with bottom of slab. Drain for interior condensation.
3. All piling shall be end bearing HP12x74.
4. All piling shall be driven to a minimum end bearing capacity of 98 tons.

LOCATION	ACTUAL PILE LOAD (Kips)	FACTORED MINIMUM END BEARING (KIPS)	ESTIMATED BEDROCK ELEVATION (FT.)	ESTIMATED TIP ELEVATION (FT.)	ESTIMATED MIN. TIP ELEVATION (FT.)	TOP ELEVATION (FT.)
Abutment 1	194	270	4790.00	4783.00	4786.00	4810.00
Abutment 2	194	270	4784.00	4777.00	4780.00	4808.34

BRW INC. 1225 LAWRENCE ST., SUITE 200, DENVER, CO 80202
PLANNING TRANSPORTATION ENGINEERING URBAN DESIGN

DEPARTMENT OF TRANSPORTATION
S.H.47 OVER TROY AVENUE
PUEBLO, COLORADO

CONSTRUCTION AND FOUNDATION LAYOUT

Designer G. Tsiouvaras	Structure Numbers	K-18-GA
Detailer G. Tsiouvaras		
Drawing Number B5 of 31 Drawings		

Revision Dates (Preliminary Stage Only)

INITIAL	DATE	INITIAL	DATE	INITIAL	DATE
DESIGNED BY GHT	9/95	CHECKED BY GHT	9/95	QUANTITIES BY GHT	9/95
DETAILED BY TJK	9/95	CHECKED BY TJK	9/95	CHECKED BY TJK	9/95

XREFS: NONE

1117B

VIEW NAME: PW | DRAWING NAME: C:\DATA\1718\CADD\STRUC\TROY\478CL01 | DATE: 11-01-1995 | TIME: 14:22:41

STATE DEPARTMENT OF HIGHWAYS
DIVISION OF HIGHWAYS
D. O. H. FORM NO. 117
REV. APR. 1988

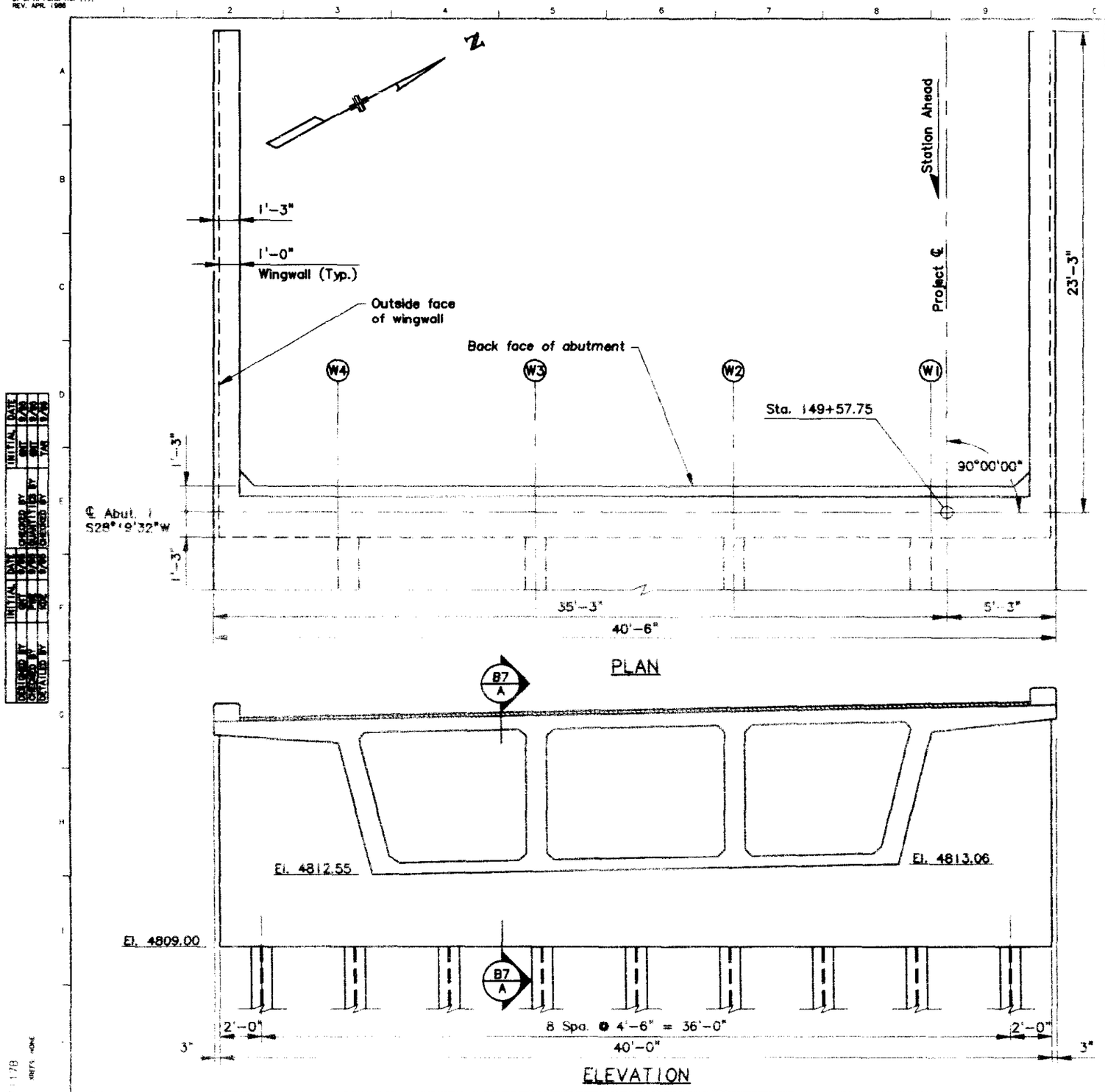

AS CONSTRUCTED		
NO REVISIONS	REVISED	VOID

FEDERAL ROAD REGION NO.	DIVISION	PROJECT NUMBER	SHEET NO.
VIII	COLORADO	STA 0471-020	26

REVISIONS		

NOTE

Concrete Class S (Bridge) may be substituted for Concrete class B (Bridge) at no additional cost.

DESIGNED BY	INITIAL	DATE
DRAWN BY		
CHECKED BY		
DETAILED BY		

CHECKED BY	INITIAL	DATE
DRAWN BY	BRT	9/95
QUANTITIES BY	BRT	9/95
REVIEWED BY	TAR	9/95

DEPARTMENT OF TRANSPORTATION

S.H.47 OVER TROY AVENUE
PUEBLO, COLORADO

ABUTMENT 1
PLAN AND ELEVATION

Designer G. Tsiouvaras	Structure Numbers	K-18-GA
Detailer K. Erickson		
Drawing Number 86 of 31 Drawings		

BRW INC. 1225 LAWRENCE ST., SUITE 200, DENVER, CO 80202
PLANNING TRANSPORTATION ENGINEERING URBAN DESIGN

Revision Dates (Preliminary Stage Only)

VIEW NAME: PV DRAWING NAME: C:\DATA\1788\CADD\STRUC\TROY\47BABC1 DATE: 10-24-1995 TIME: 10:58:44

117B
SHEETS: NONE

STATE DEPARTMENT OF HIGHWAYS
DIVISION OF HIGHWAYS
D. O. H. FORM NO. 117
REV. APR. 1986

AS CONSTRUCTED			
NO REVISIONS	REVISED	VOID	

FEDERAL ROAD REGION NO.	DIVISION	PROJECT NUMBER	SHEET NO.
VIII	COLORADO	STA 0471-02-	27

REVISIONS		

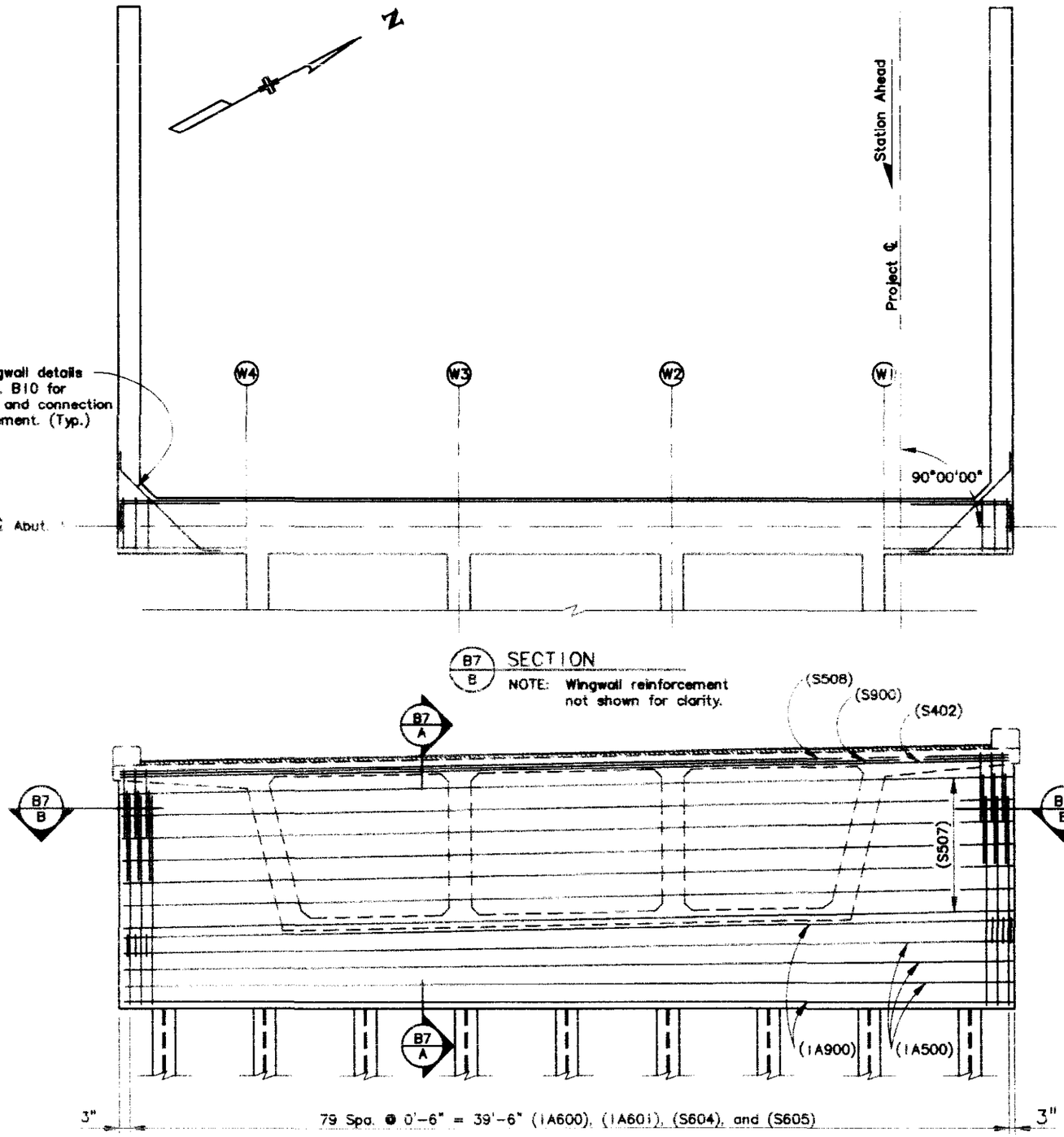

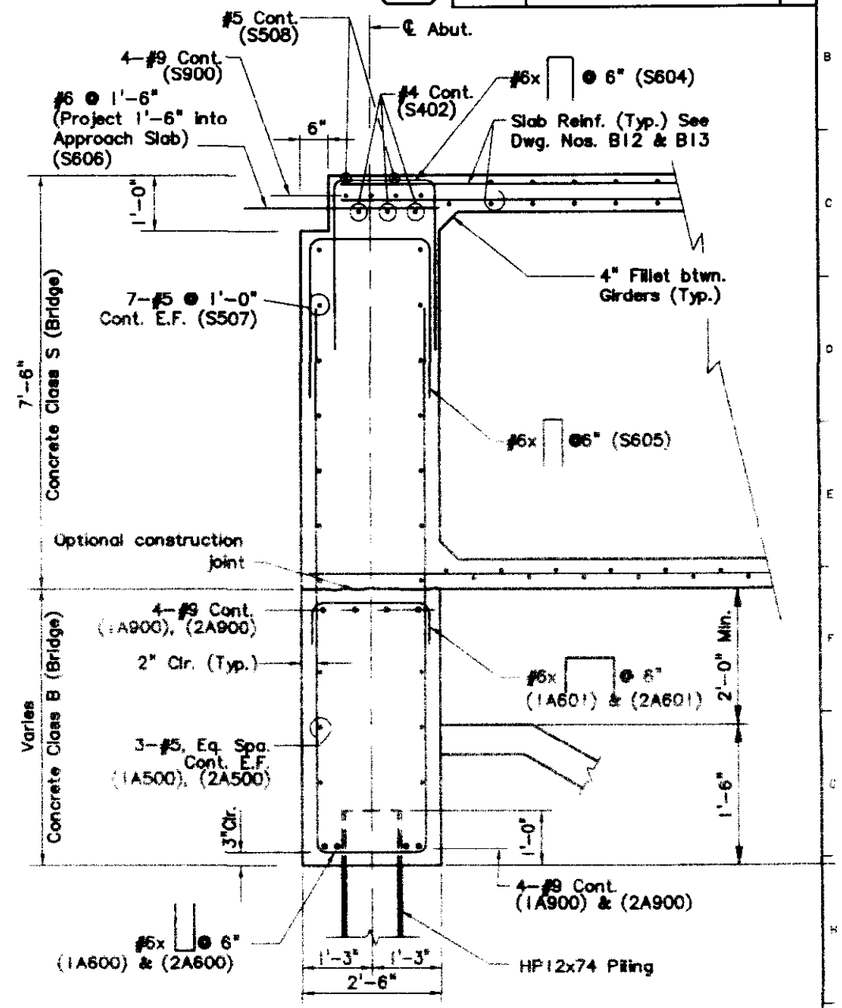

B7/A SECTION

BRW INC. 1225 LAWRENCE ST., SUITE 200, DENVER, CO 80202
PLANNING TRANSPORTATION ENGINEERING URBAN DESIGN

DEPARTMENT OF TRANSPORTATION		
S.H.47 OVER TROY AVENUE PUEBLO, COLORADO		
ABUTMENT 1 REINFORCMENT		
Designer G. Tsiouvaras	Structure Numbers	K-18-GA
Detailer K. Erickson		
Drawing Number 87 of 31 Drawings		

Revision Dates (Preliminary Stage Only)

INITIAL	DATE	INITIAL	DATE
DESIGNED BY GRY	9/88	CHECKED BY GRY	9/88
DETAILED BY TAR	9/88	CHECKED BY RDC	9/88

VIEW NAME: PV | DRAWING NAME: C:\DATA\718\CADD\STRUCT\TROY\47BAB02 | DATE: 10-24-1995 | TIME: 11:24:04

STATE DEPARTMENT OF HIGHWAYS
DIVISION OF HIGHWAYS
D. O. H. FORM NO. 117:
REV. APR. 1986

AS CONSTRUCTED			
NO REVISIONS	REVISED	VOID	

FEDERAL ROAD REGION NO.	DIVISION	PROJECT NUMBER	SHEET NO.
VIII	COLORADO	STA 0471-020	28

REVISIONS		

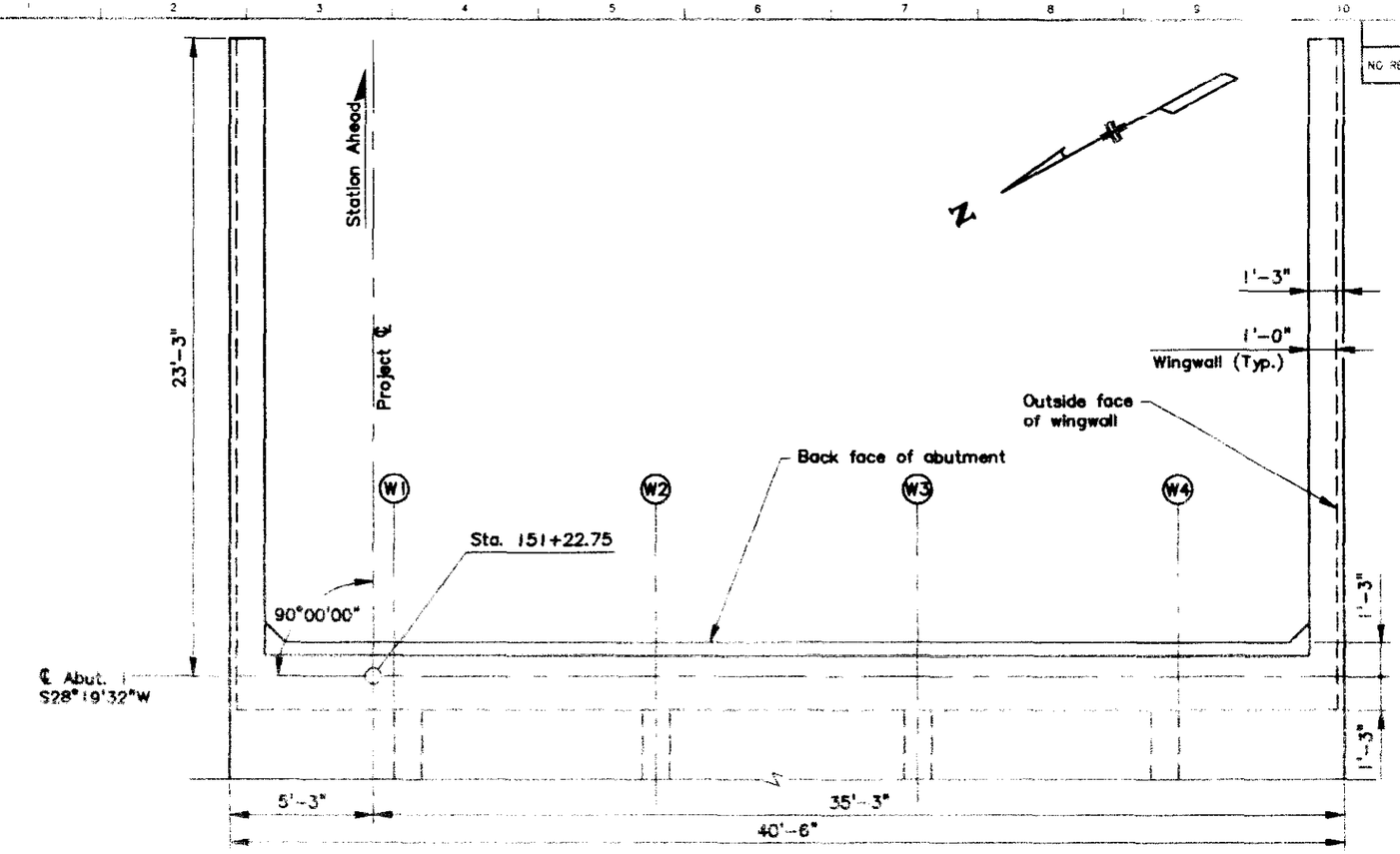

PLAN

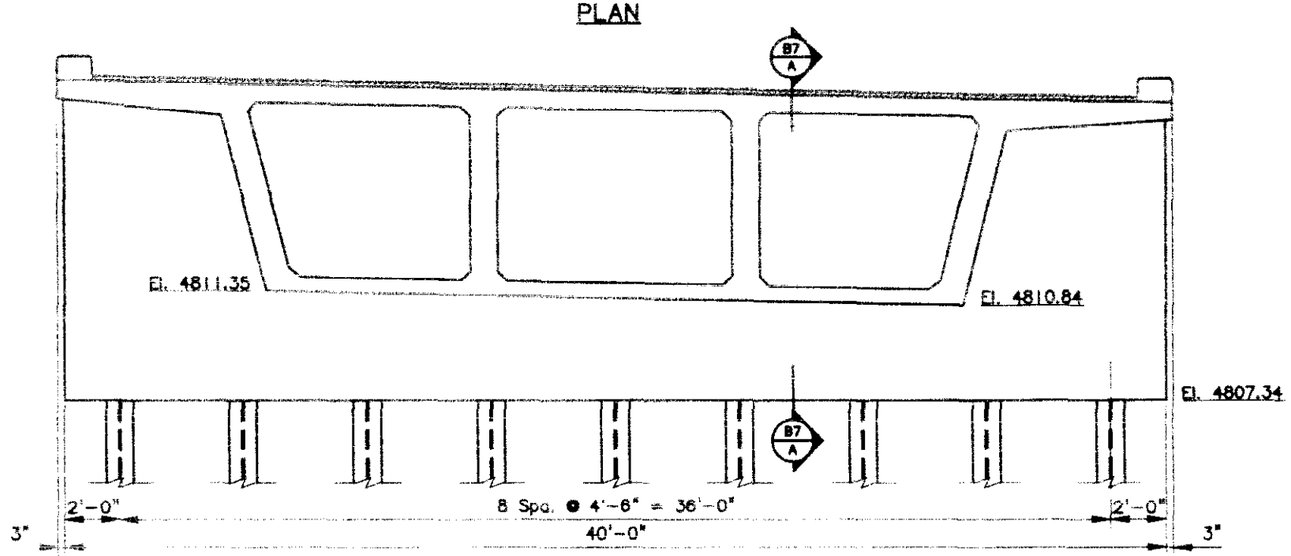

ELEVATION

INITIAL	DATE	INITIAL	DATE
DESIGNED BY GW	5/90	CHECKED BY GW	5/90
DRAWN BY GW	5/90	CHECKED BY GW	5/90
DETAILED BY TGD	5/90	CHECKED BY FAR	5/90

BRW INC. 1225 LAWRENCE ST., SUITE 200, DENVER, CO 80202
PLANNING TRANSPORTATION ENGINEERING URBAN DESIGN

DEPARTMENT OF TRANSPORTATION
S.H.47 OVER TROY AVENUE
PUEBLO, COLORADO

ABUTMENT 2
PLAN AND ELEVATION

Designer G. Tsiouvaras	Structure Numbers	K-18-GA
Detailer K. Erickson		
Drawing Number B8 of 31		Drawings

Revision Dates (Preliminary Stage Only)

VIEW NAME: PW DRAWING NAME: D:\DATA\471B\CADD\STRUCT\TROY\478AB04 DATE: 10-24-1995 TIME: 12:01:30

STATE DEPARTMENT OF HIGHWAYS
DIVISION OF HIGHWAYS
D. O. H. FORM NO. 117
REV. APR. 1966

AS CONSTRUCTED			
NO REVISIONS	REVISED	VOID	

FEDERAL ROAD REGION NO.	DIVISION	PROJECT NUMBER	SHEET NO.
VIII	COLORADO	STA 0471-020	29

REVISIONS		

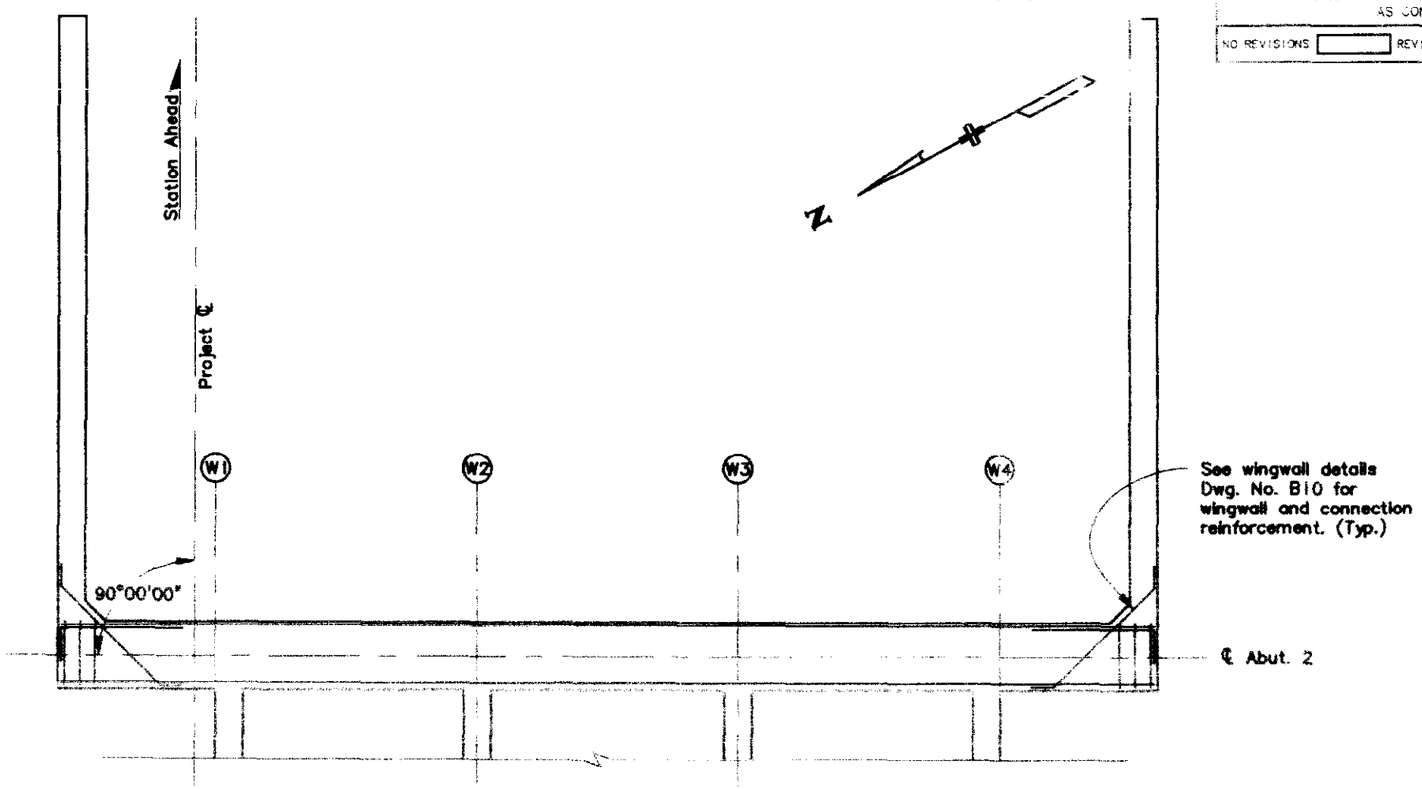

B9/B SECTION
NOTE: Wingwall reinforcement not shown for clarity.

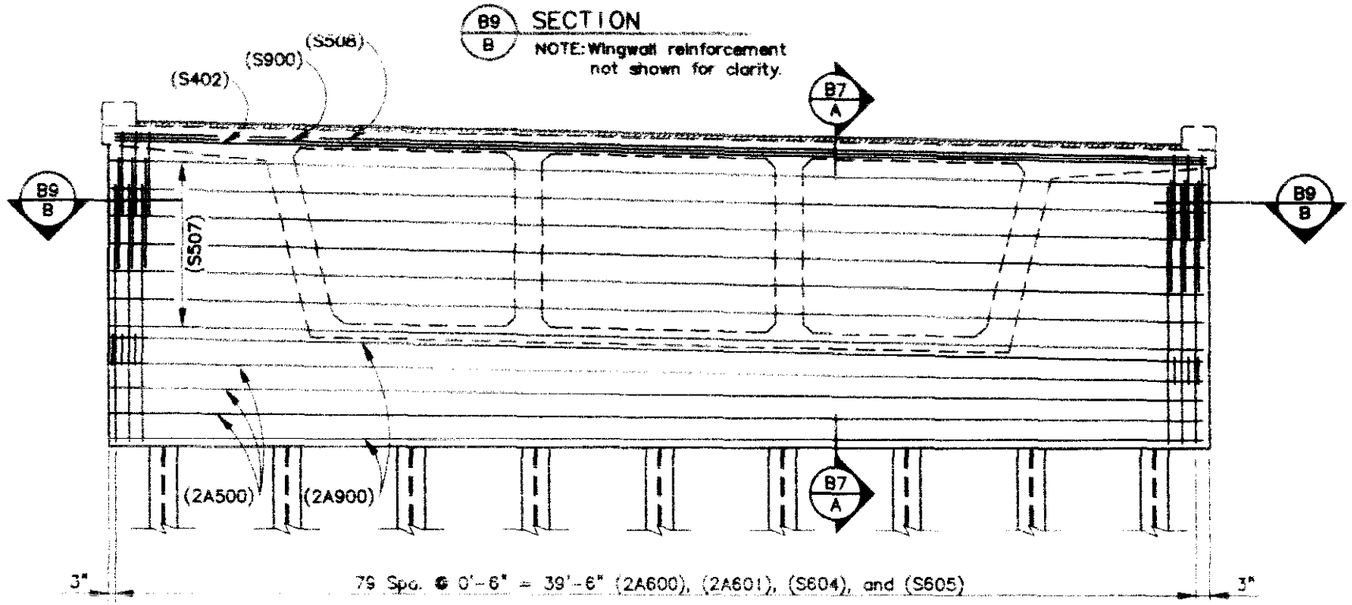

ELEVATION

INITIAL	DATE
DESIGNED BY GAT	1/95
DRAWN BY GAT	1/95
CHECKED BY GAT	1/95
DETAILED BY FAK	1/95

INITIAL	DATE
DESIGNED BY GAT	1/95
DRAWN BY GAT	1/95
QUANTITIES BY GAT	1/95
CHECKED BY FAK	1/95

BRW INC. 1225 LAWRENCE ST. SUITE 300, DENVER, CO 80202
PLANNING TRANSPORTATION ENGINEERING URBAN DESIGN

DEPARTMENT OF TRANSPORTATION
S.H.47 OVER TROY AVENUE
PUEBLO, COLORADO

ABUTMENT 2
REINFORCEMENT

Designer G. Tsiouvaras	Structure Numbers	K-18-GA
Detailer K. Erickson		
Drawing Number B9 of 31		Drawings

Revision Dates (Preliminary Stage Only)

VIEW NAME: PW DRAWING NAME: G:\DATA\...\B\CADD\STRUC\TROY\47BAB05 DATE: 01-24-1995 TIME: 6:23:06

STATE DEPARTMENT OF HIGHWAYS
DIVISION OF HIGHWAYS
D. O. H. FORM NO. 117
REV. APR. 1966

AS CONSTRUCTED		
NO REVISIONS	REVISED	VOID

FEDERAL ROAD REGION NO.	DIVISION	PROJECT NUMBER	SHEET NO.
VIII	COLORADO	STA 0471-020	30

REVISIONS		

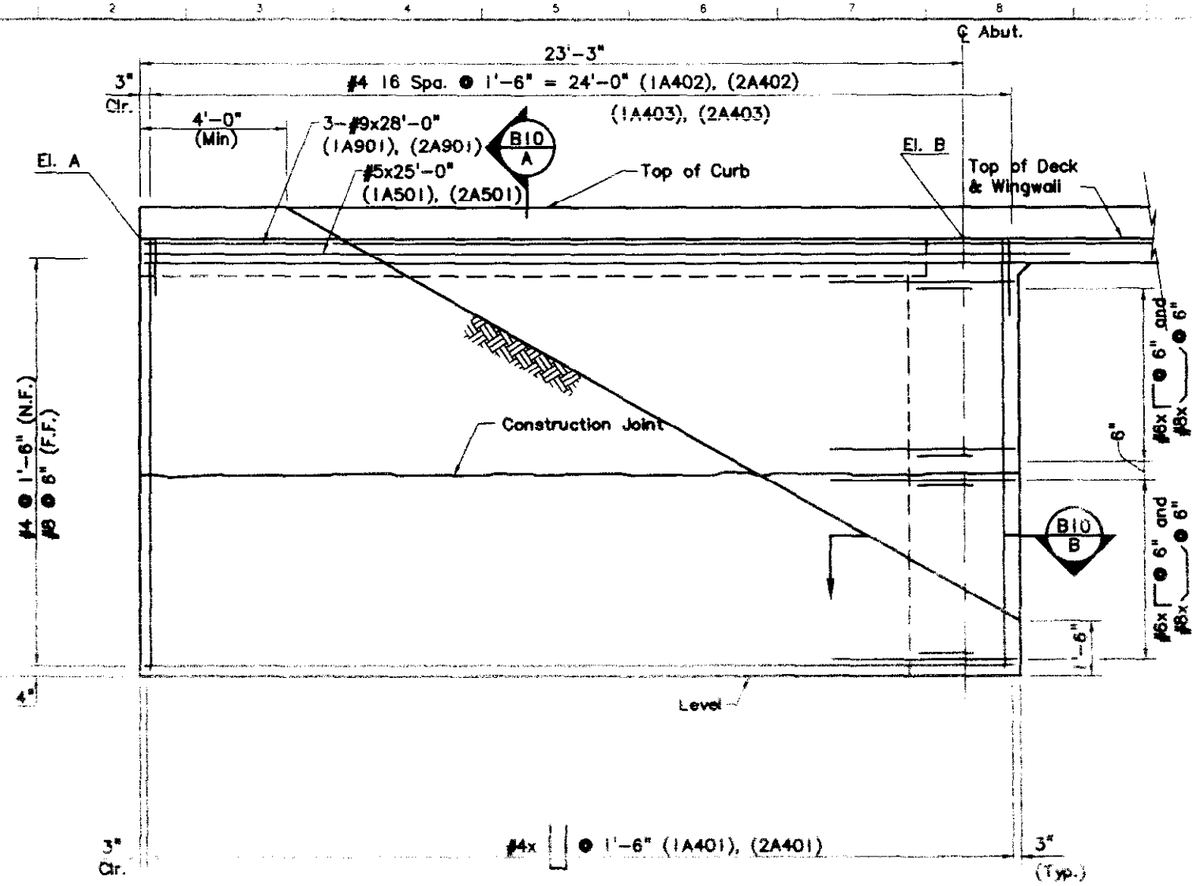

WINGWALL ELEVATION

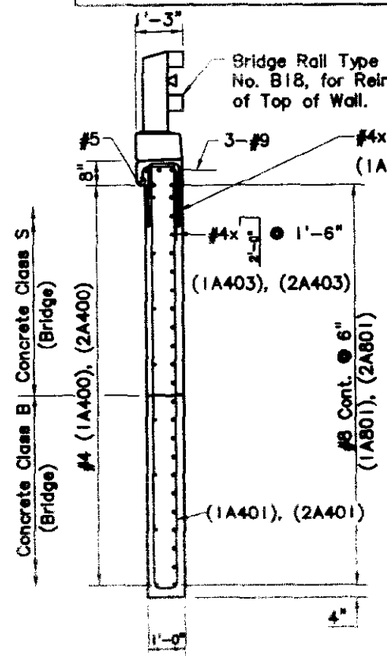

B10 A SECTION

Note: The Class S portion of the Concrete in Wingwalls shall be placed Monolithic with the Deck.

LOCATION	EL. A	EL. B	EL. C
1N	4820.92	4820.72	4809.00
1S	4820.11	4819.91	4809.00
2N	4818.65	4818.98	4807.34
2S	4817.84	4818.17	4807.34

ABUTMENT 1 ABUTMENT 2

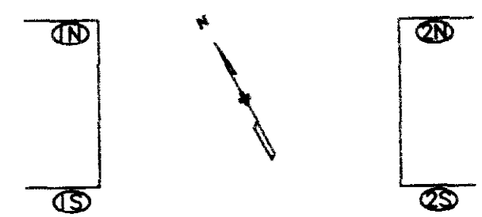

WINGWALL KEY PLAN

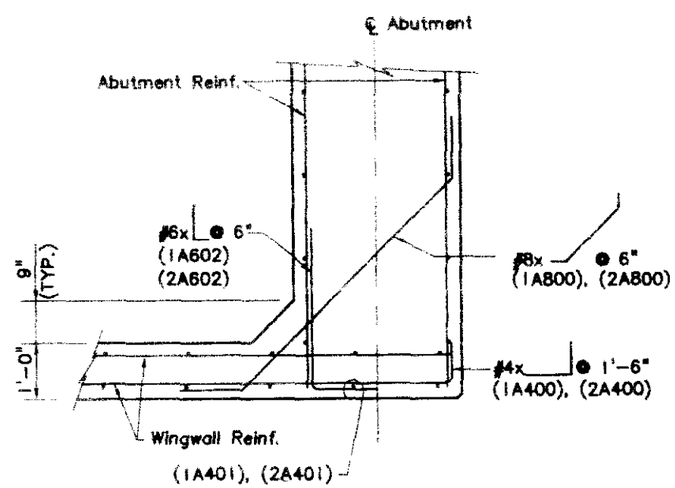

B10 B SECTION

BRW INC. 1225 LAWRENCE ST. SUITE 300, DENVER, CO 80202
PLANNING TRANSPORTATION ENGINEERING URBAN DESIGN

DEPARTMENT OF TRANSPORTATION
S.H.47 OVER TROY AVENUE
PUEBLO, COLORADO

ABUTMENT WINGWALLS AND REINFORCEMENT

Designer G. Tsiouvaras	Structure Numbers	K-18-GA
Detailer K. Erickson		
Drawing Number B10 of 31		Drawings

Revision Dates (Preliminary Stage Only)

INITIAL	DATE
BW	9/95
BW	9/95
YW	9/95

DATE	CHECKED BY
9/95	BW
9/95	BW
9/95	BW

DESIGNED BY	CHECKED BY
GT	BW
GT	BW
GT	BW

VIEW NAME: PW DRAWING NAME: C:\DATA\478\CADD\STRUC\TROY\478WW01 DATE: 12-28-1995 TIME: 10:50:29

STATE OF COLORADO
STATE DEPARTMENT OF HIGHWAYS
DIVISION OF HIGHWAYS
D. O. H. FORM NO. 117
REV. APR. 1966

AS CONSTRUCTED			
NO REVISIONS	REVISED	VOID	

FEDERAL ROAD REGION NO.	DIVISION	PROJECT NUMBER	SHEET NO.
VIII	COLORADO	STA 0471-020	21

REVISIONS

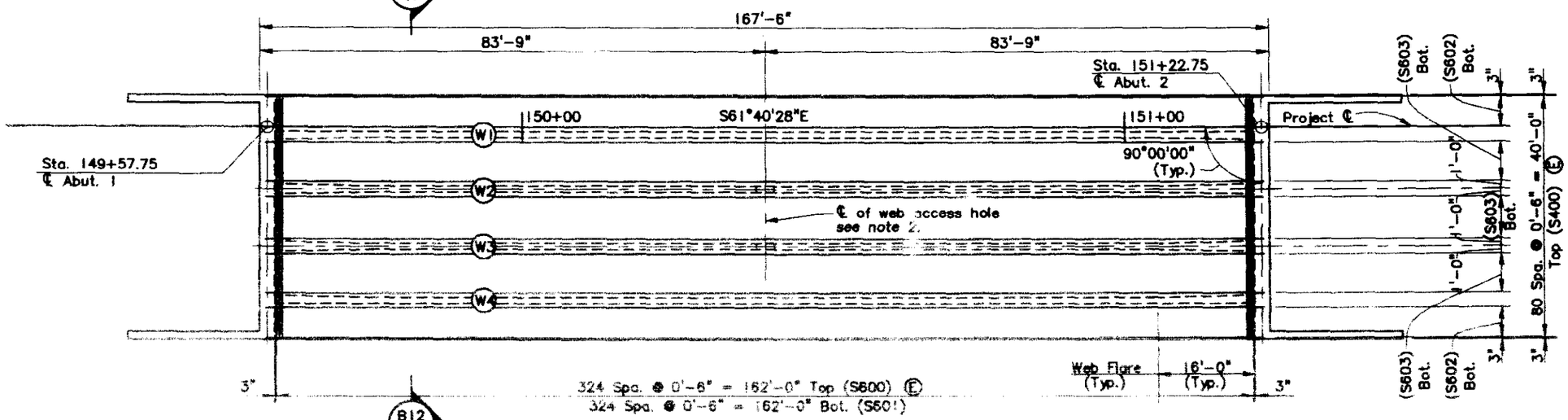

TOP DECK REINFORCING PLAN

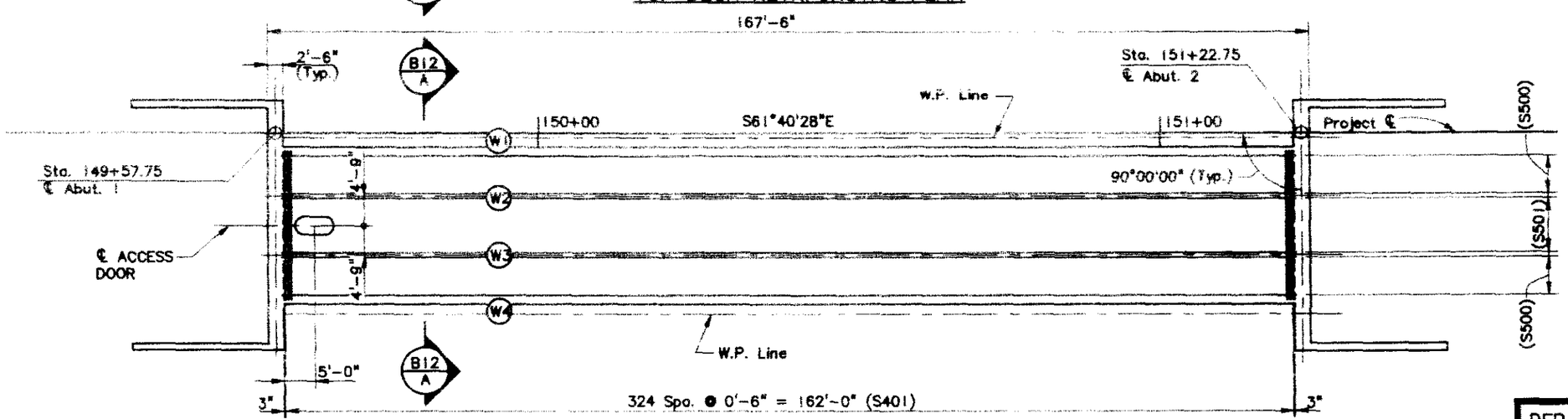

BOTTOM DECK REINFORCING PLAN

Notes:

1. Stagger all splices.
2. For web access hole dimensions and reinforcement see access door details Dwg. No. B14.

DEPARTMENT OF TRANSPORTATION
S.H.47 OVER TROY AVENUE
PUEBLO, COLORADO

SUPERSTRUCTURE
DECK REINFORCEMENT
PLAN

Designer G. Tsiouvaras	Structure Numbers	K-18-GA
Detailer K. Erickson		
Drawing Number B11 of 31		Drawings

BRW INC. PLANNING TRANSPORTATION ENGINEERING URBAN DESIGN
1225 LAWRENCE ST. SUITE 200 DENVER, CO 80202

Revision Dates (Preliminary Stage Only)

CH NAME: PW DRAWING NAME: C:\DATA\12\18\CADD\STRUC\TROY\K18DPD DATE: 10-25-1995 TIME: 10:53:51

INITIAL DATE
DESIGNED BY
CHECKED BY
QUANTITIES BY
DETAILED BY

F-1178
SHEETS HOME

STATE DEPARTMENT OF HIGHWAYS
DIVISION OF HIGHWAYS
D. O. H. FORM NO. 117.
REV. APR. 1986

AS CONSTRUCTED		
NO REVISIONS	REVISED	VOID

FEDERAL ROAD REGION NO.	DIVISION	PROJECT NUMBER	SHEET NO.
VIII	COLORADO	STA 0471-020	32

REVISIONS		

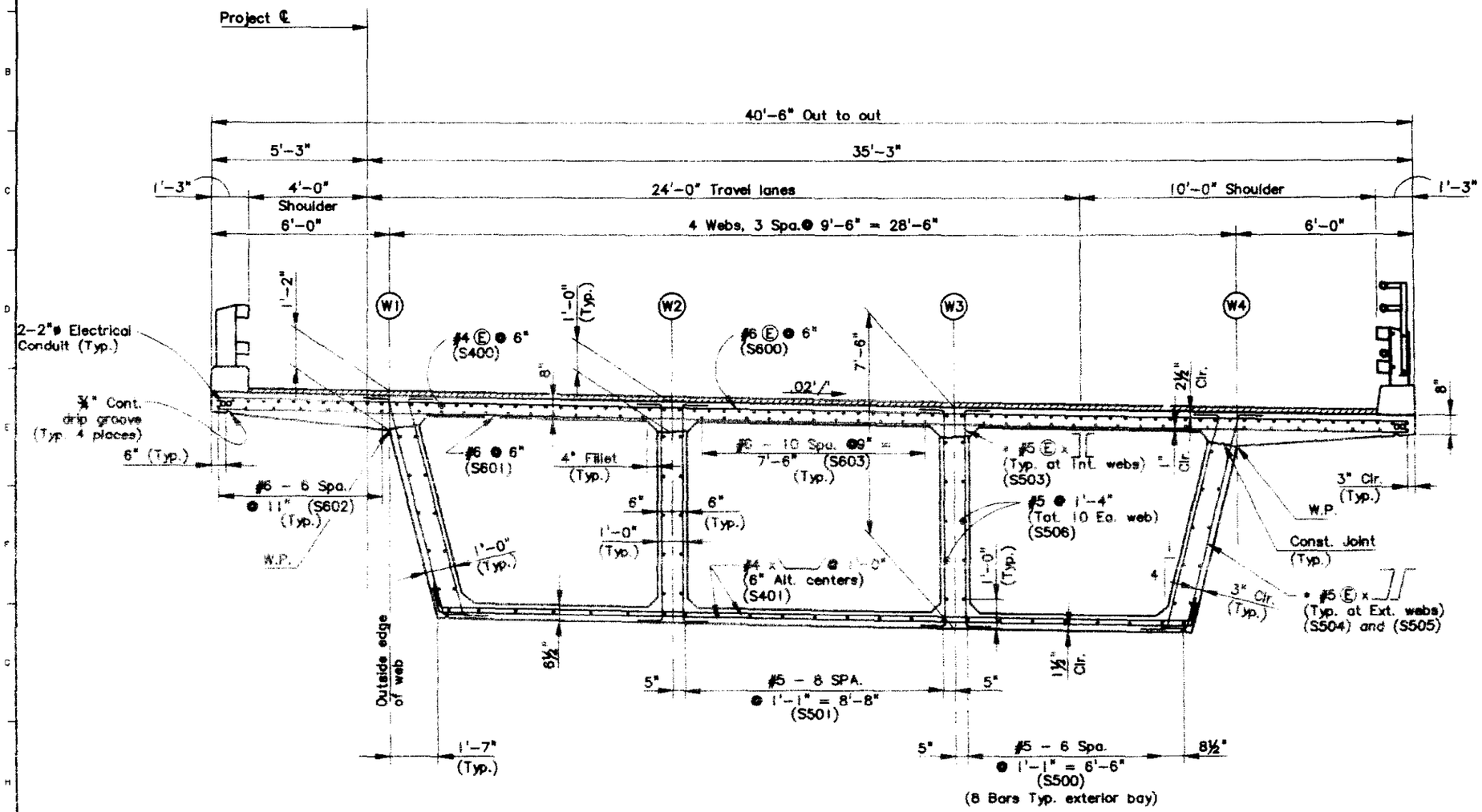

TYPICAL SECTION

NOTE: •See Superstructure Post Tensioning Layout Dwg. No. B13 for stirrup spacing.

INITIAL	DATE
GRT	5/95
GRT	5/95
YM	5/95

CHECKED BY	CHECKED BY	QUANTITIES BY	CHECKED BY

INITIAL	DATE
BW	5/95
BW	5/95
BW	5/95

DETAILED BY	CHECKED BY	DESIGNED BY

SCALE: NONE

BRW INC. 1225 LAWRENCE ST., SUITE 204, DENVER, CO 80202
PLANNING TRANSPORTATION ENGINEERING URBAN DESIGN

DEPARTMENT OF TRANSPORTATION
S.H.47 OVER TROY AVENUE
PUEBLO, COLORADO

SUPERSTRUCTURE SECTION DETAILS

Designer G. Taiouvaras	Structure Numbers	K-18-GA
Detailer K. Erickson		
Drawing Number B12 of 31		Drawings

Revision Dates (Preliminary Stage Only)

VIEW NAME: PV | DRAWING NAME: C:\DATA\1718\CADD\STRUC\TROY\478SU01A | DATE: 12-31-1995 | TIME: 10:42:28

STATE DEPARTMENT OF HIGHWAYS
DIVISION OF HIGHWAYS
D. O. H. FORM NO. 117
REV. APR. 1986

AS CONSTRUCTED			FEDERAL ROAD REGION NO.	DIVISION	PROJECT NUMBER	SHEET NO.
NO REVISIONS	REVISED	VOID	VIII	COLORADO	STA 0471-020	33

B-618-1
(use with B-618-2 and B-618-3)

REVISIONS		

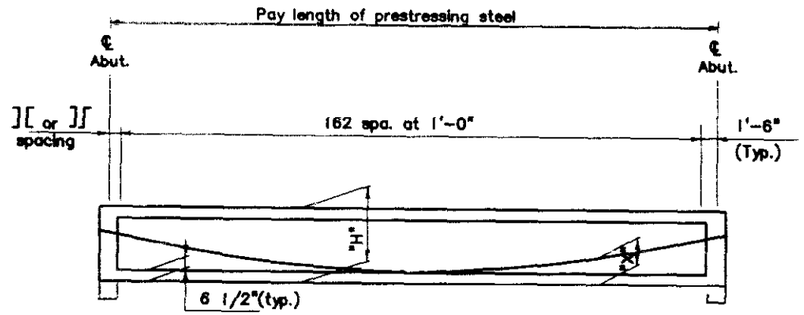

Point	1.00	1.10	1.20	1.30	1.40	1.50 ⊕	1.60	1.70	1.80	1.90	2.00 ⊕
H	7.50	7.50	7.50	7.50	7.50	7.50	7.50	7.50	7.50	7.50	7.50
X	4.50	3.30	2.38	1.71	1.31	1.18	1.31	1.71	2.38	3.30	4.50
Deflection	0.00'	0.09	0.17	0.24	0.28	0.29	0.28	0.24	0.17	0.09	0.00'

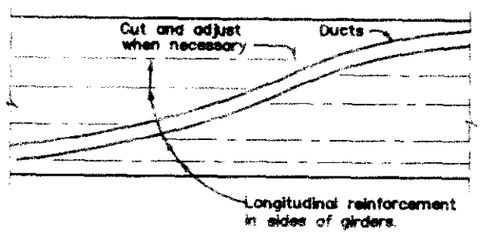

ADJUSTED GIRDER REINFORCING ELEVATION

CRITICAL POINT ⊕	KL+ $\mu\alpha$	INITIAL STRESS RATIO
1.5	0.037	.964
2.000	0.073	.930

NOTES:

Reinforcing that interferes with the prestressing tendon alignment shall be adjusted as approved by the Engineer.

Where dead end anchorage and tendons are accessible, the anchorage system and length of projecting prestressing steel shall permit jacking with the same jacking equipment that was used on the live end.

Deviations from the duct pattern, duct size, and strand size assumed in the design must be approved by the Engineer. Duct patterns 1 and 2 are the only acceptable patterns.

The deflection shown is positive downward. It includes the instantaneous effects of dead load and prestressing, and a factor of three (3) multiplier to account for long term creep. Formed web elevations must be adjusted upward for the indicated positive deflection.

Use stress relieved or low-relaxation strands meeting the requirements of ASTM A416 grade 270.

STRESSING SEQUENCE:

Tendons may be jacked from both ends, either simultaneously or sequentially, or ½ the tendons may be jacked from each end. If jacking force or steel area is greater than assumed in the design, prestressing quantities shall not be adjusted.

No more than ½ of the prestressing force in any web may be stressed before an equal force is stressed in the adjacent webs. At no time during the stressing operations will more than 1/6 of the total prestressing force be applied eccentrically about the centerline of the structure.

At the Contractors option, the prestressing force may vary ±5% from the theoretical force per web provided the total P(JACK) force is obtained and is distributed symmetrically about the centerline of the typical section. P(JACK) is the sum of the peak forces reached during jacking in each tendon.

DESIGN:

Design is based on K=0.0002 and μ =0.25. P(JACK) at the jacking ends includes friction, anchor set of 0.625" at the jacking end, elastic shortening, and provisions for an additional 32 KSI long term loss in stress.

Duct pattern 2 on Dwg. B14, with 0.6 inch diameter low-relaxation strands in 4" O.D. ducts was assumed in the design.

P(JACK) = 12655 KIPS total at jacking ends
Aps minimum = 82.50 SQ. IN.
f's = 270 KSI
f'c = 5000 PSI at 28 days field compressive strength
f'ci = 4000 PSI at stressing

⊕ Designates critical points for P(JACK). The Contractor shall submit elongation and jacking calculations based on KL+ $\mu\alpha$ (including anchor set if any) and initial stress (initial stress ratio times jacking stress before long term losses) at the points labeled "⊕" and tabulated on this sheet.

INITIAL	DATE		INITIAL	DATE
DESIGNED BY GMT	6/96	CHECKED BY GMT	6/96	
DRAWN BY PMK	6/96	QUANTITIES BY GMT	6/96	
CHECKED BY MBE	6/96	CHECKED BY YJK	6/96	

FILTH

SHEETS: NONE

DEPARTMENT OF TRANSPORTATION
S.H.47 OVER TROY AVENUE
PUEBLO, COLORADO

SUPERSTRUCTURE POST TENSIONING LAYOUT

Designer G. Tsiouvaras	Structure Numbers	K-18-GA
Detailer K. Erickson		
Drawing Number B13 of 31 Drawings		

BRW INC. 1225 LAWRENCE ST. SUITE 200, DENVER CO 80202
PLANNING TRANSPORTATION ENGINEERING URBAN DESIGN

Revision Dates (Preliminary Stage Only)

VIEW NAME: PV | DRAWING NAME: C:\DATA\1718\CADD\STRUC\TRDY\K78SL02 | DATE: 10-24-1995 | TIME: 10:28:44

STATE DEPARTMENT OF HIGHWAYS
DIVISION OF HIGHWAYS
D. O. H. FORM NO. 117
REV. APR. 1966

AS CONSTRUCTED		
NO REVISIONS	REVISED	VOID

FEDERAL ROAD REGION NO.	DIVISION	PROJECT NUMBER	SHEET NO.
VIII	COLORADO	STA 0471-020	34

REVISIONS		

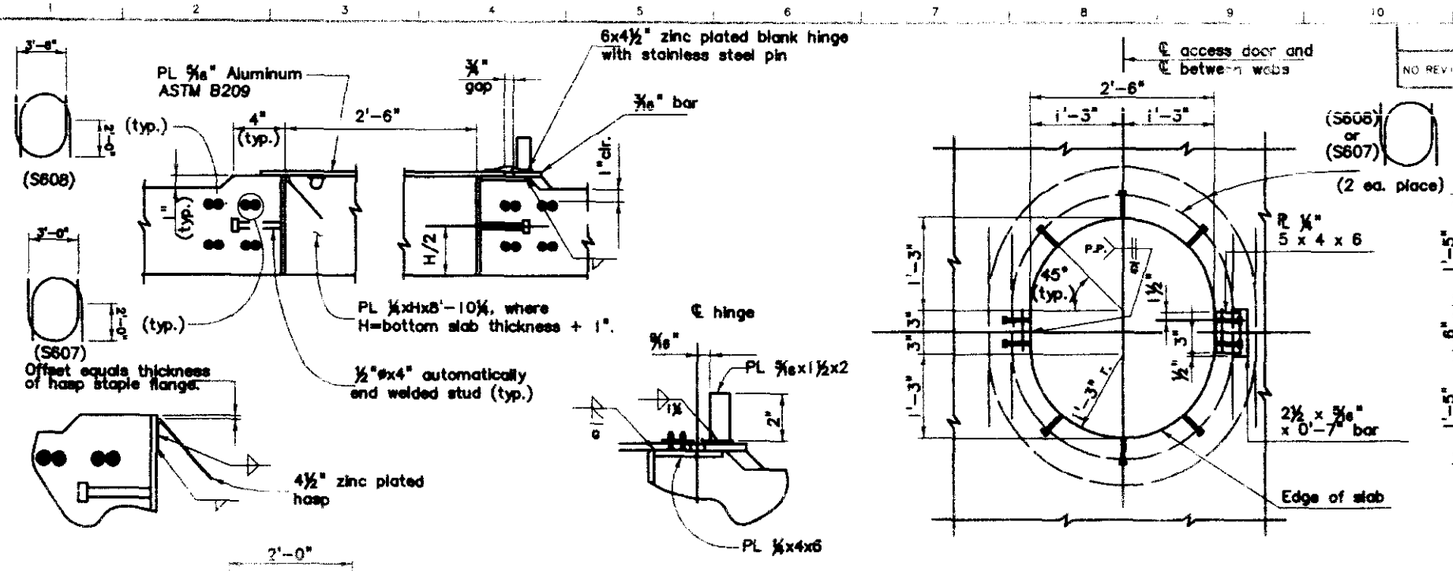

B-618-2

(use with B-618-1 and B-618-3; also add B-618-7 when horizontal curve is present.)

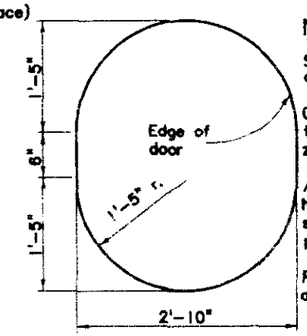

NOTES:

See abutment details and superstructure details for dimensions and reinforcing not shown.

Grind galvanizing from frame, where the hasp or hinge attach, prior to welding. After welding, paint the weld and surrounding areas with zinc rich paint meeting Military Specification DOD-P-21035A.

Attach door with 4 – ¼"ø zinc plated bolts with countersunk heads. Use double nuts; burr threads after tightening. Attach hasp staple in a similar manner. Leave door in the open position while pouring the bottom slab.

Paint door stop with zinc rich paint, meeting the above specification, after welding.

ACCESS DOOR DETAILS

Door, galv. frame, and hardware to be paid for in item No. 601 – Concrete Class S.

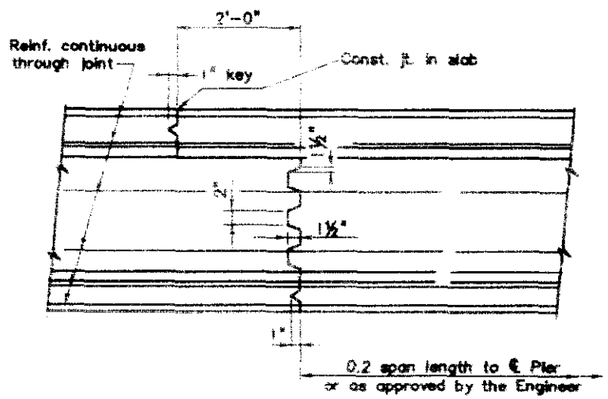

TRANSVERSE WEB CONSTRUCTION JOINT

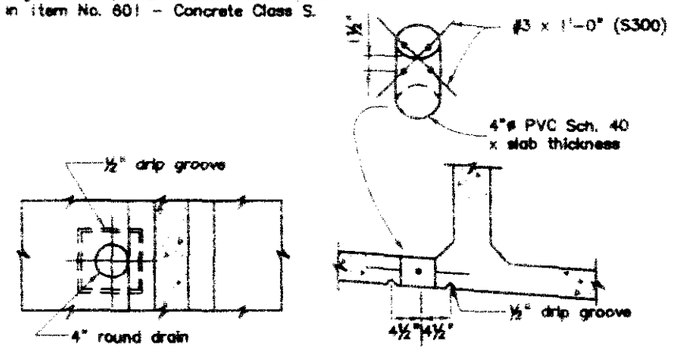

PLAN

ELEVATION

BOTTOM SLAB DRAIN DETAIL

Locate at low point of each cell.

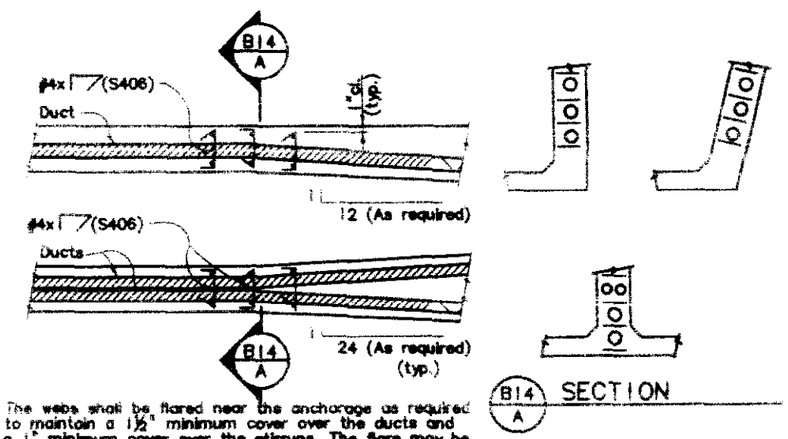

The webs shall be flared near the anchorage as required to maintain a 1½" minimum cover over the ducts and a 1" minimum cover over the stirrups. The flare may be on one side only for exterior girder webs. Provide #4 ties above, below, and between each row of ducts, tie to three stirrups at beginning of web flare.

PLAN VIEW OF DUCTS AT GIRDER WEB FLARE

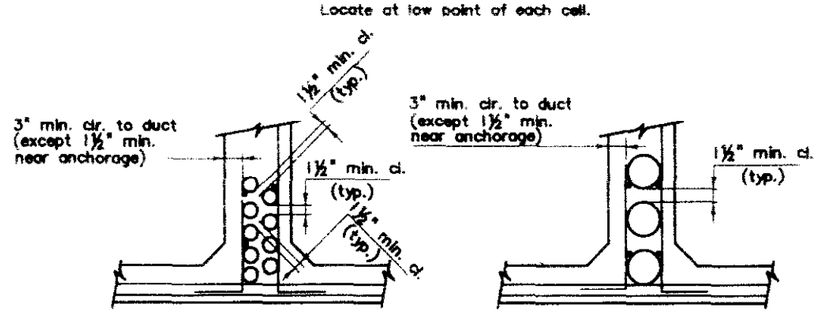

PATTERN 1

PATTERN 2

CLEARANCE REQUIREMENTS FOR DUCTS

BRW PLANNING TRANSPORTATION ENGINEERING URBAN DESIGN
BRW INC. 1225 LAWRENCE ST., SUITE 200, DENVER, CO 80202

DEPARTMENT OF TRANSPORTATION

S.H.47 OVER TROY AVENUE
PUEBLO, COLORADO

CAST-IN-PLACE
POST-TENSIONED
BOX GIRDER DETAILS

Designer G. Tsiouvaras	Structure Numbers	K-18-GA
Detailer K. Erickson		
Drawing Number B14 of 31		Drawings

Revision Dates (Preliminary Stage Only)

INITIAL	DATE
GHT	9/95
GHT	9/95
TJR	9/95

	INITIAL	DATE
DESIGNED BY	GHT	9/95
CHECKED BY	GHT	9/95
QUANTITIES BY	TJR	9/95
CHECKED BY	RDK	9/95
DETAILED BY		

F117B

KREFS NONE

VIEW NAME: PW DRAWING NAME: C:\DATA\1718\CADD\STRUCT\TROT\47BSUB3 DATE: 10-24-1995 TIME: 10:30:13

STATE DEPARTMENT OF HIGHWAYS
DIVISION OF HIGHWAYS
D. O. H. FORM NO. 117
REV. APR. 1986

AS CONSTRUCTED		
NO REVISIONS	REVISED	VOID

FEDERAL ROAD REGION NO.	DIVISION	PROJECT NUMBER	SHEET NO.
VIII	COLORADO	STA 0471-020	35

B-618-3
(use with B-618-1 and B-618-2)

REVISIONS		

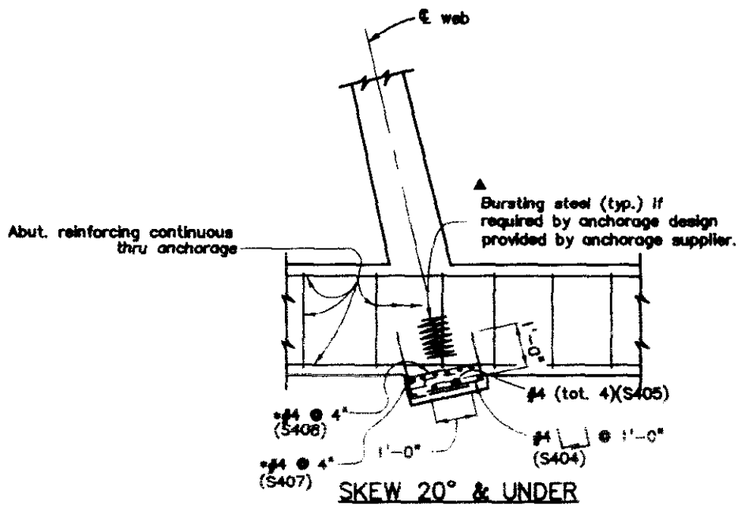

SKEW 20° & UNDER

PLAN VIEW

SEAT FOR PRESTRESSED ANCHORAGE AT ABUTMENTS

*Adjust reinforcement spacing to facilitate anchorage device placement. Provide equivalent area of reinforcement either side of anchorage device.

●0" may be used also.

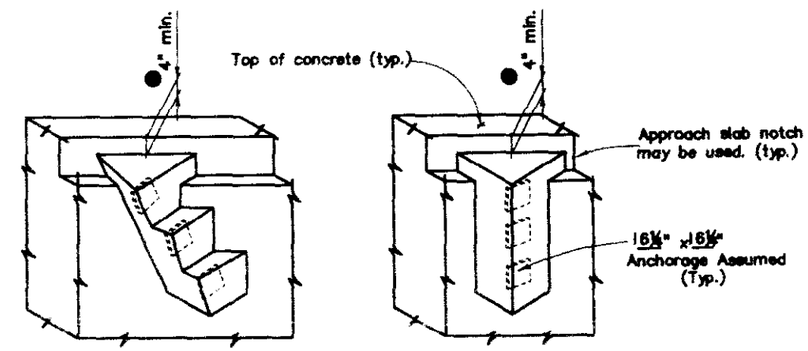

EXT. SLOPING WEB

VERTICAL WEB

TYPICAL ANCHORAGE ILLUSTRATIONS

Details may be modified to specific anchorage.

NOTES:

The anchorage shall be covered with concrete to provide a minimum of 2" of cover.

The distance between the edge of a bearing plate and the edge or corner of the concrete shall be 2" minimum.

The webs shall be flared near the anchorage as required to maintain a 1½" minimum cover over the ducts and a 1" minimum cover over the stirrups. The flare may be on one side only for exterior webs.

All reinforcing designated ▲, and concrete in flares not included in explicit details, shall not be included in concrete and reinforcing quantities, but shall be included in the price of the prestressing steel.

See abutment details and superstructure details for dimensions and reinforcing not shown.

INITIAL	DATE	DESIGNED BY	INITIAL	DATE

INITIAL	DATE	CHECKED BY	INITIAL	DATE

INITIAL	DATE	DETAILED BY	INITIAL	DATE

SCALE: NONE

BRW INC. 1725 LAWRENCE ST., SUITE 200, DENVER, CO 80202
PLANNING
TRANSPORTATION
ENGINEERING
URBAN DESIGN

DEPARTMENT OF TRANSPORTATION
S.H.47 OVER TROY AVENUE
PUEBLO, COLORADO

CAST-IN-PLACE
POST-TENSIONED BOX
GIRDER DETAILS

Designer G. Tsiouvaras	Structure Numbers	K-18-GA
Detailer K. Erickson		
Drawing Number B15 of 31		Drawings

Revision Dates (Preliminary Stage Only)

VIEW NAME: PW | DRAWING NAME: C:\DATA\17B\CADD\STRUC\TROY\47BSU04 | DATE: 10-24-1995 | TIME: 10:42:4

STATE DEPARTMENT OF HIGHWAYS
DIVISION OF HIGHWAYS
D. O. H. FORM NO. 117:
REV. APR 1986

AS CONSTRUCTED		
NO REVISIONS	REVISED	VOID

FEDERAL ROAD REGION NO.	DIVISION	PROJECT NUMBER	SHEET NO.
VIII	COLORADO	STA 0471-020	36

REVISIONS		

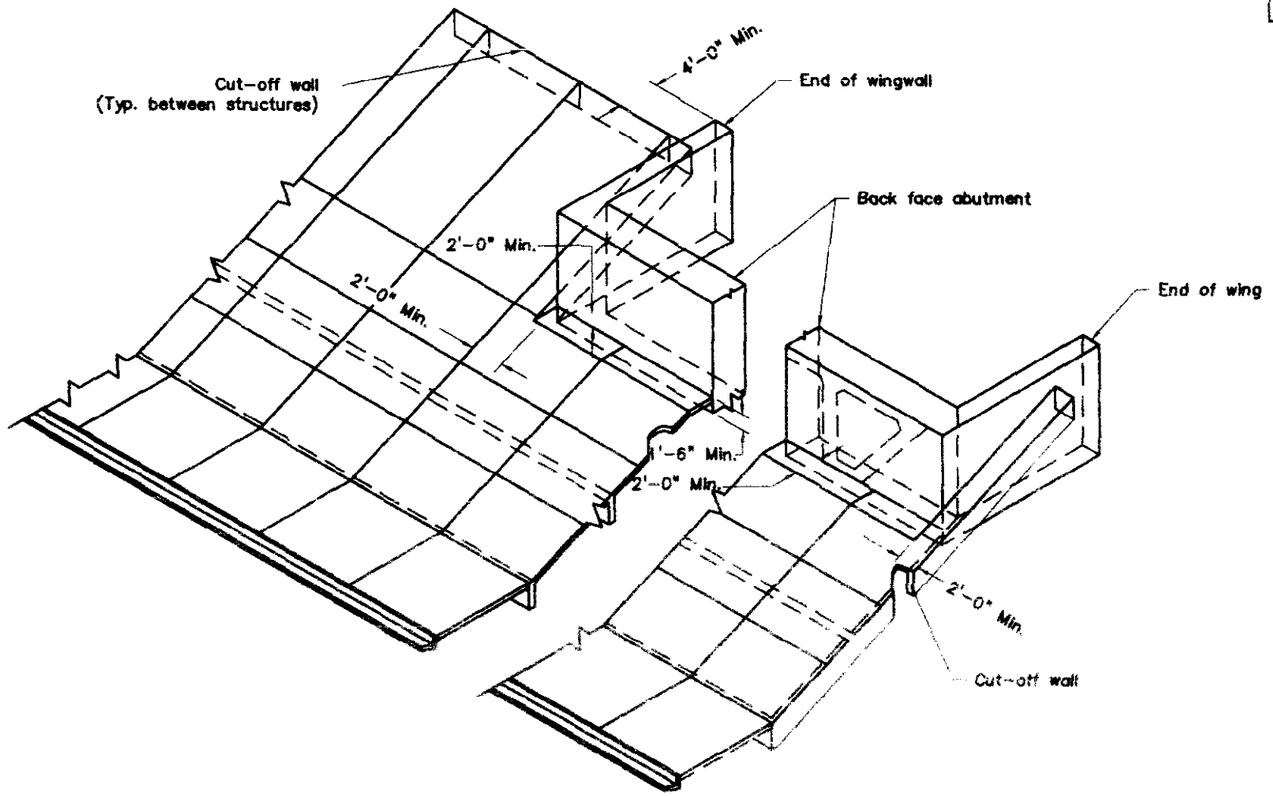

NOTES:

WIRE FABRIC SHALL BE 2" FROM THE END OF JOINTS AND SHALL LAP 8" AT SPLICES.

WHERE SLOPE OR BERM PAVING BUTTS AGAINST ABUTMENT AND CURB AND GUTTER SEPERATE WITH 1" EXPANSION JOINT MATERIAL.

EXPANSION JOINT MATERIAL AND WELDED WIRE FABRIC SHALL NOT BE PAID FOR SEPARATELY, BUT SHALL BE INCLUDED IN THE WORK.

STRUCTURE EXCAVATION FOR CONCRETE SLOPE AND DITCH PAVING SHALL BE LIMITED TO THE ACTUAL VOLUME OCCUPIED BY THE SLOPE PAVING CONCRETE.

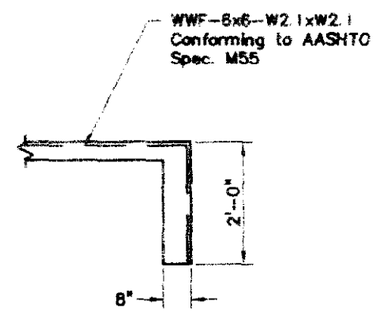

TYPICAL SECTION THRU CUT-OFF WALL

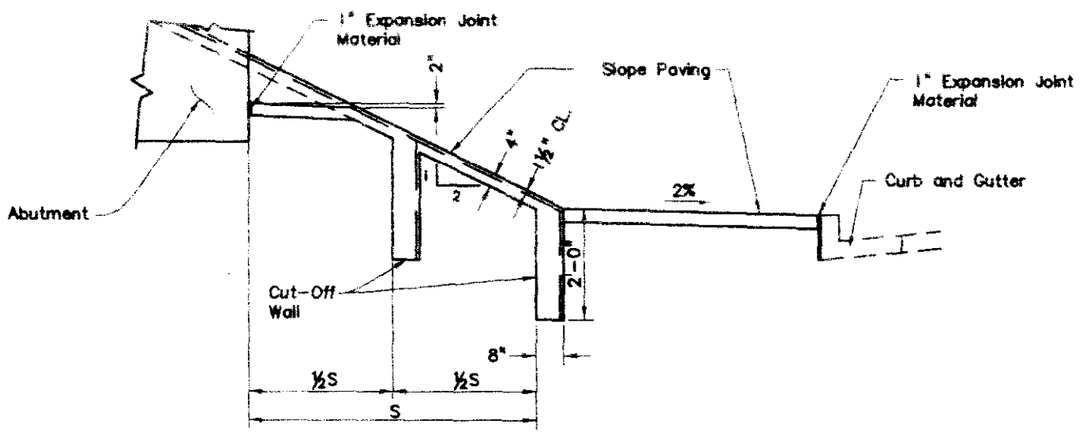

TYPICAL SECTION THRU SLOPE PAVING

INITIAL	DATE
DESIGNED BY	
CHECKED BY	
QUANTITIES BY	
CHECKED BY	
DETAILED BY	

F1178

NOTE: NONE

BRW INC. 1625 LARIMER ST. SUITE 200, DENVER, CO 80202
PLANNING
TRANSPORTATION
ENGINEERING
URBAN DESIGN

DEPARTMENT OF TRANSPORTATION

S.H.47 OVER TROY AVENUE
PUEBLO, COLORADO

SLOPE PAVING
DETAILS

Designer G. Tsiouvaras	Structure Numbers	K-18-GA
Detailer K. Erickson		
Drawing Number B16 of 31		Drawings

Revision Dates (Preliminary Stage Only)

VIEW NAME: PV | DRAWING NAME: C:\DATA\1718\CADD\STRUC\TROY\47BSP02 | DATE: 10-24-1995 | TIME: 10:44:25

STATE DEPARTMENT OF HIGHWAYS
DIVISION OF HIGHWAYS
D. O. H. FORM NO. 117
REV. APR. 1986

AS CONSTRUCTED			
NO REVISIONS	REVISED	VOID	

FEDERAL ROAD REGION NO.	DIVISION	PROJECT NUMBER	SHEET NO.
VIII	COLORADO	STA 0471-020	37

REVISIONS		

B-613-C

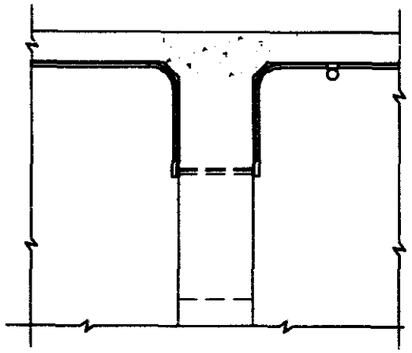

SECTION (B17 A)

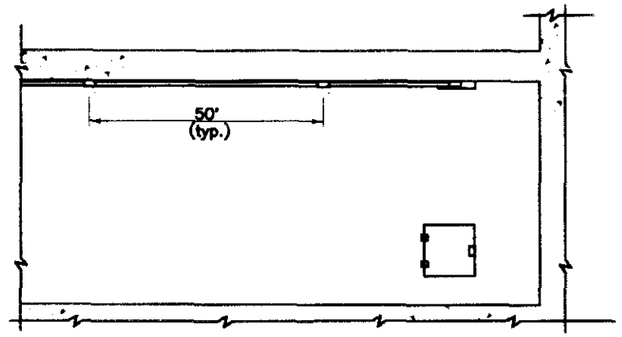

PLAN

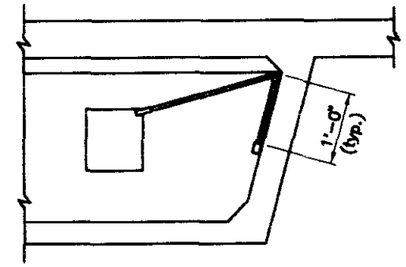

SECTION (B17 B)

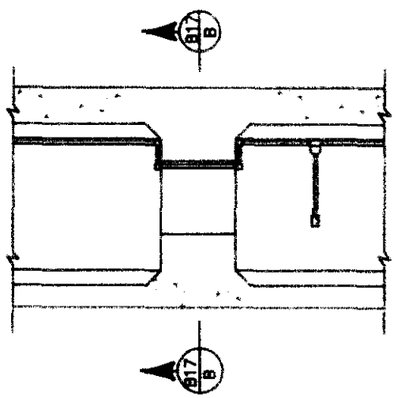

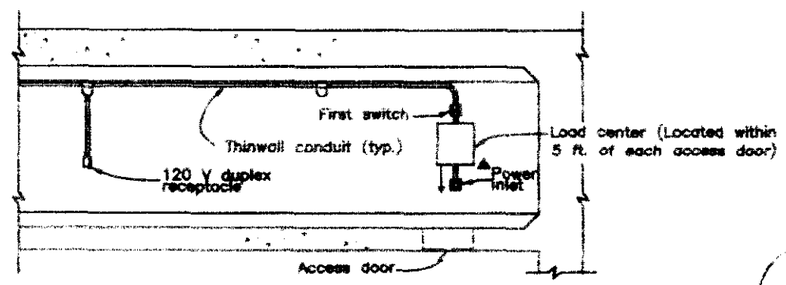

ELEVATION

▲ When conduit is shown on the Construction Layout, the load center shall be connected to this power source instead of using a separate power inlet. Use 3 – #8 copper wires in conduit.

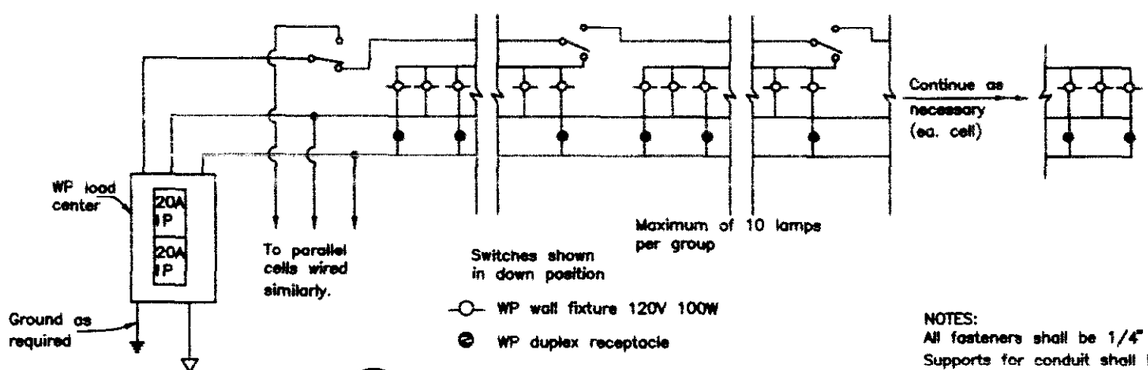

WIRING DIAGRAM

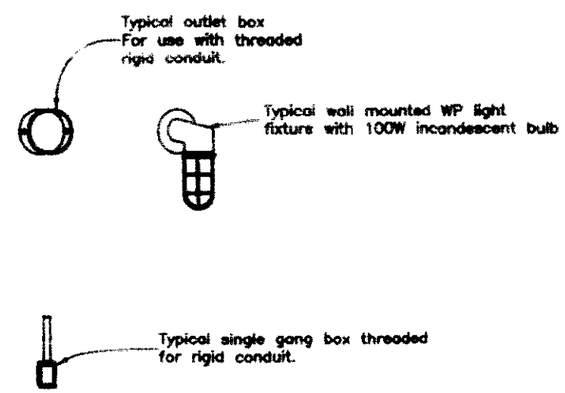

FIXTURE DETAILS

NOTES:
All fasteners shall be 1/4"
Supports for conduit shall be at 10' spacing (max.).
Maximum length of any system shall be 1300'.
Lighting systems shall be similar length when more than one system is required.

BRW INC. 1225 LAWRENCE ST., SUITE 300, DENVER, CO 80202
PLANNING TRANSPORTATION ENGINEERING URBAN DESIGN

DEPARTMENT OF TRANSPORTATION
S.H.47 OVER TROY AVENUE
PUEBLO, COLORADO
INTERIOR LIGHTING
(CONCRETE BOX GIRDER)

Designer G. Tsiouvaras	Structure Numbers	K-18-GA
Detailer		
Drawing Number B17 of 31		Drawings

Revision Dates (Preliminary Stage Only)

INITIAL	DATE
DRAWN BY GW	1/88
CHECKED BY GW	1/88
QUANTITIES BY TJR	1/88
CHECKED BY	1/88

INITIAL	DATE
DETAILED BY GW	1/88
CHECKED BY GW	1/88
DETAILED BY TJR	1/88

VIEW NAME: PW DRAWING NAME: C:\DATA\17-B\CADD\STRUC\TROY14\B17.DGN DATE 10-21-1991 TIME 9:46:34

STATE DEPARTMENT OF HIGHWAYS
DIVISION OF HIGHWAYS
D. O. H. FORM NO. 117
REV. APR. 1986

AS CONSTRUCTED				FEDERAL ROAD REGION NO.	DIVISION	PROJECT NUMBER	SHEET NO.
NO REVISIONS	REVISED	VOID		VIII	COLORADO	STA 0471-202	38

B-606-10

REVISIONS		

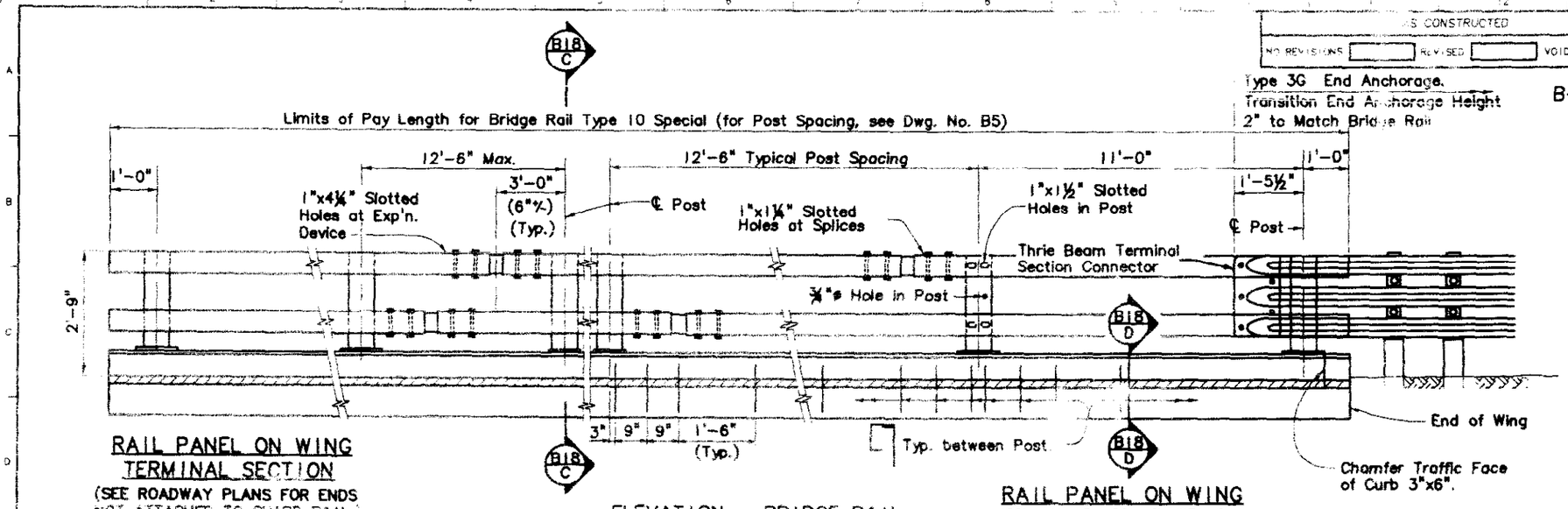

RAIL PANEL ON WING TERMINAL SECTION
(SEE ROADWAY PLANS FOR ENDS NOT ATTACHED TO GUARD RAIL)

ELEVATION - BRIDGE RAIL

RAIL PANEL ON WING TRANSITION SECTION
(SEE ROADWAY PLANS FOR ENDS REQUIRING ATTACHMENT TO GUARD RAIL)

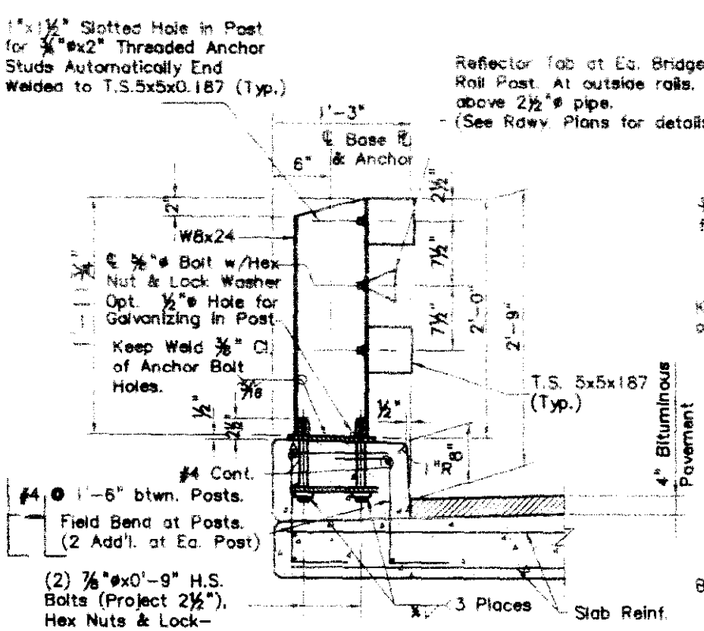

B18 C SECTION

Reflector Tab at Ea. Bridge Rail Post. At outside rails, place above 2½"ø pipe. (See Rdwy. Plans for details.)

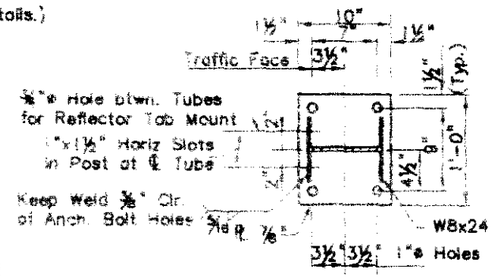

PLAN - POST DETAIL

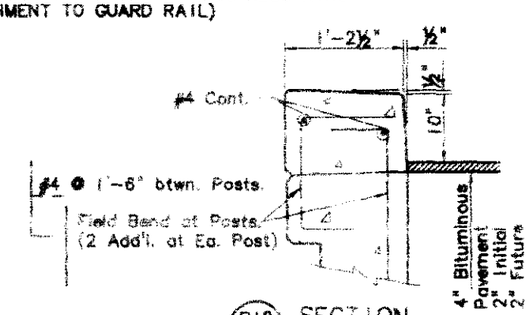

B18 D SECTION

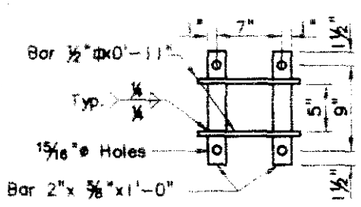

ANCHOR DETAIL

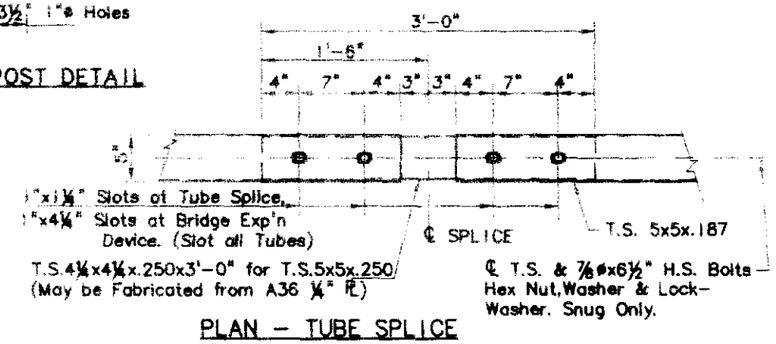

PLAN - TUBE SPLICE

Stagger Top & Bottom Splices into Different Post Spacings, except at Expansion Joint Place at Opposite Ends of Some Post Space. (Range of Motion=1'-0" at Bridge Expansion Device.)

NOTE: Outside bridge rails of Str. Nos. K-18-EX and K-18-GA require an additional bicycle railing. Refer to Dwg. B21 for details.

GENERAL NOTES

ALL TUBES SHALL BE FABRICATED FROM ASTM A500 GRADE B. ALL POSTS SHALL BE FABRICATED FROM ASTM A36 STEEL.

THE ABOVE MATERIAL AND ALL ANCHOR BOLTS AND MISCELLANEOUS BOLTS, NUTS, AND WASHERS SHALL BE GALVANIZED AFTER FABRICATION, IN ACCORDANCE WITH SECTION 509.

CONCRETE, REINFORCING STEEL, AND STRUCTURAL STEEL ELEMENTS SHALL CONFORM TO THE REQUIREMENTS OF SECTIONS 601, 602, AND 509; RESPECTIVELY.

POST ANCHOR, ENCASED IN CONCRETE, SHALL BE ASTM A36 OR AASHTO M183 STEEL, AS NOTED, AND NEED NOT BE GALVANIZED.

THE TUBES SHALL BE SHOP BENT OR FABRICATED TO FIT HORIZONTAL CURVE WHEN RADIUS IS LESS THAN 1500 FEET.

TUBES SHALL BE CONTINUOUS OVER NOT LESS THAN TWO POSTS.

THE CENTERLINE OF THE POSTS AT THE BRIDGE EXPANSION DEVICE SHALL BE A MINIMUM OF 3'-0" FROM THE CENTERLINE OF THE BRIDGE EXPANSION DEVICE, MEASURED ALONG THE CENTERLINE OF POSTS.

ALL BOLTS THAT HAVE LOCK WASHERS SHALL BE TIGHTENED TO SNUG ONLY.

POSTS SHALL BE PERPENDICULAR TO THE GRADE OF THE DECK.

ONE OR MORE 12'-6" POST SPACINGS MAY BE REDUCED (8'-4" MIN.) IN ORDER TO MAINTAIN DIMENSIONS FROM THE END OF THE WINGS AND EXPANSION JOINTS.

OPTIONAL DRAIN HOLE FOR GALVANIZING MAY BE DRILLED, PUNCHED OR CLIPPED, LEAVING SMOOTH SURFACES AND TRANSITIONS. NO FLAME CUTTING OR AIR CARBON ARC GOUGING IS ALLOWED.

POSTS, POST ANCHORS, BASE PLATES, BACKING PLATES, ANCHOR BOLTS, MISCELLANEOUS BOLTS, NUTS, WASHERS, TUBES, TUBE EXPANSION DEVICES, TUBE SPLICES, END PLATES, CURB CONCRETE (CLASS D), CURB REINFORCING STEEL, AND REFLECTOR TABS SHALL BE INCLUDED IN ITEM 606, BRIDGE RAIL TYPE 10 Special.

PRIOR TO FABRICATION OF THIS ITEM, TWO SETS OF SHOP DRAWINGS WHICH COMPLY WITH THE REQUIREMENTS OF SECTION 105, SHALL BE SUBMITTED TO THE DIVISION FOR INFORMATION ONLY. ONE SET SHALL BE SENT TO THE COLORADO DIVISION OF HIGHWAYS, STAFF MATERIALS BRANCH, MATERIALS INSPECTION UNIT, 4340 E. LOUISIANA AVENUE, DENVER, COLORADO 80222, AND ONE SET SHALL BE SENT TO THE ENGINEER. THE SHOP DRAWINGS WILL NOT BE APPROVED OR RETURNED.

STRUCTURAL STEEL:
AASHTO M183 (ASTM A36) f = 36,000 psi
COLD FORMED ASTM A500 GRADE B f = 46,000 psi

INFORMATION ONLY

DESCRIPTION	UNIT	PER LIN. FT.
STRUCTURAL STEEL (GALVANIZED)	LB.	33.1
CONCRETE CLASS D (BRIDGE)	CU.YD.	0.04
REINFORCING STEEL (EPOXY COATED)	LB.	4.0

DEPARTMENT OF TRANSPORTATION
S.H.47 OVER TROY AVENUE
PUEBLO, COLORADO

BRIDGE RAIL TYPE 10 SPECIAL

Designer G. Tsiouvaras	Structure Numbers	K-18-GA	
Detailer K. Erickson			
Drawing Number B18 of 31			Drawings

Revision Dates (Preliminary Stage Only)

INITIAL	DATE	DESIGNED BY	GWT	6/86
		CHECKED BY	GWT	6/86
		QUANTITIES BY	EY	6/86
		DETAILED BY	TJK	6/86
		CHECKED BY		

VIEW NAME: PW DRAWING NAME: C:\DATA\1718\CADD\STRUC\TROY\478BR01 DATE: 06-25-1998 TIME: 11:18:27

STATE DEPARTMENT OF HIGHWAYS
DIVISION OF HIGHWAYS
D. O. H. FORM NO. 117
REV APR. 1966

AS CONSTRUCTED			
NO REVISIONS	REVISED	VOID	

FEDERAL ROAD REGION NO.	DIVISION	PROJECT NUMBER	SHEET NO.
VIII	COLORADO	STA 0471-020	39

REVISIONS		

B-606-10A

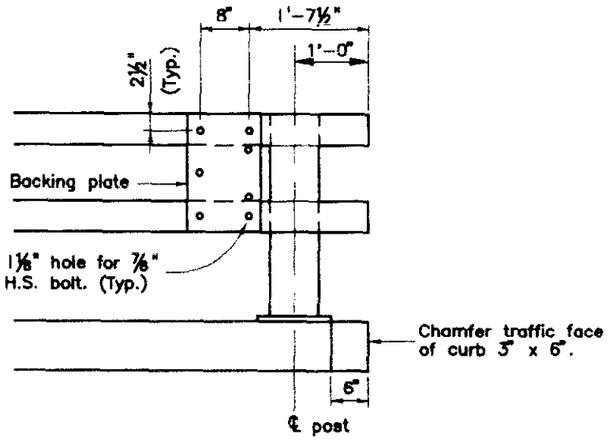

RAIL TUBE DETAILS

Thrie beam not shown.

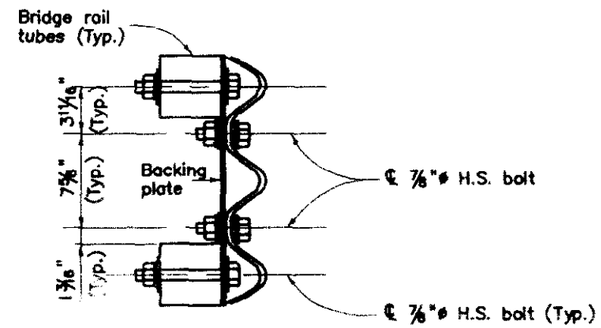

SECTION THRU BACKING PLATE

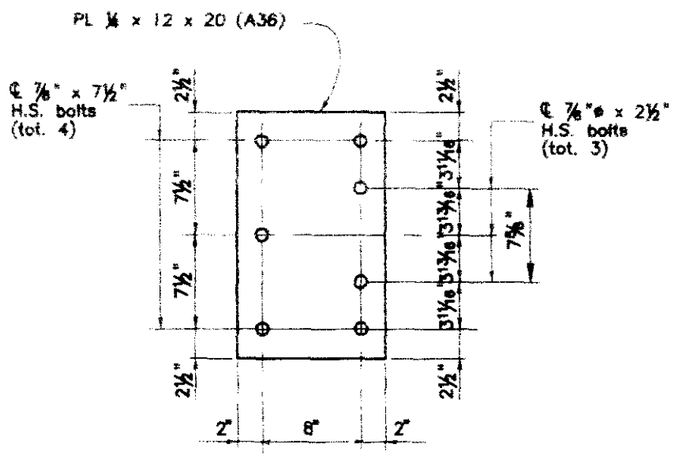

BACKING PLATE

Holes are 1⅛"ø for ⅞"ø H.S. Bolts with Hex Nuts
2 PL washers, and 1 lock washer.

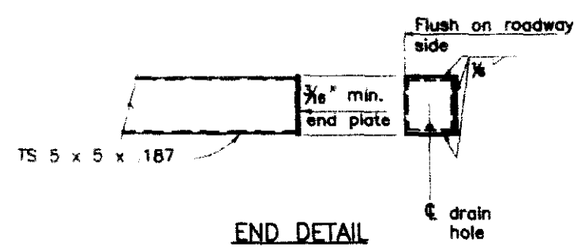

END DETAIL

INITIAL	DATE
DESIGNED BY GRT	6/96
DRAWN BY GRT	6/96
CHECKED BY FAR	6/96

INITIAL	DATE
DESIGNED BY	
DRAWN BY	
CHECKED BY	
REVISED BY	

SCALE: NONE

DEPARTMENT OF TRANSPORTATION

S.H.47 OVER TROY AVENUE
PUEBLO, COLORADO

BRIDGE RAIL TYPE 10 SPECIAL

Designer G. Tsiouvaras		Structure Numbers	K-18-GA
Detailer K. Erickson			
Drawing Number B19 of 31			Drawings

BRW INC. 1225 LAWRENCE ST. SUITE 200 DENVER CO 80202
PLANNING TRANSPORTATION ENGINEERING URBAN DESIGN

Revision Dates (Preliminary Stage Only)

VIEW NAME: PV | DRAWING NAME: C:\DATA\7189\CADD\STRUCT\TROY\472B802 | DATE: 10-24-1995 | TIME: 08:50:34

STATE DEPARTMENT OF HIGHWAYS
DIVISION OF HIGHWAYS
D. O. H. FORM NO. 117
REV. APR. 1986

AS CONSTRUCTED		
NO REVISIONS	REVISED	VOID

FEDERAL ROAD REGION NO.	DIVISION	PROJECT NUMBER	SHEET NO.
VIII	COLORADO	STA 0471-020	40

REVISIONS		

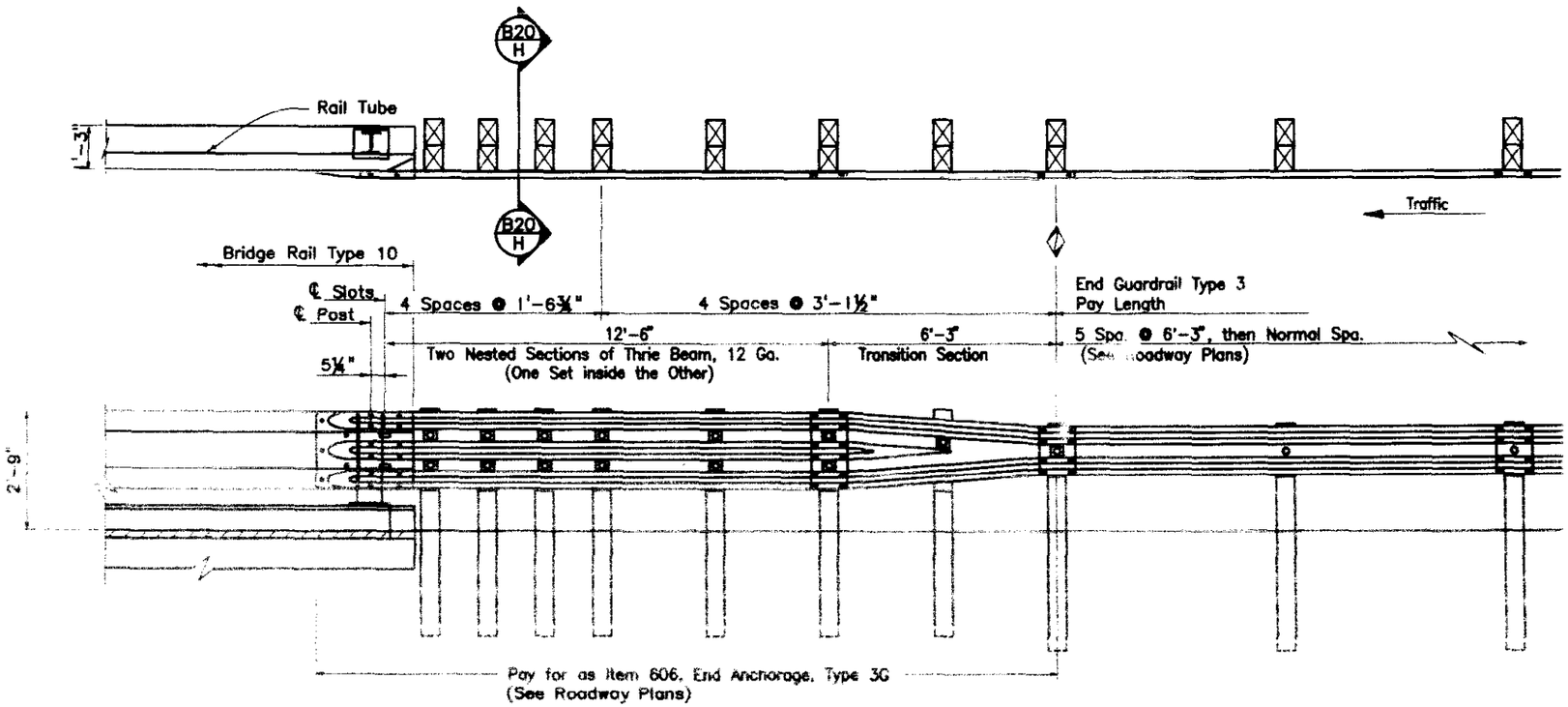

TYPE 3G END ANCHORAGE

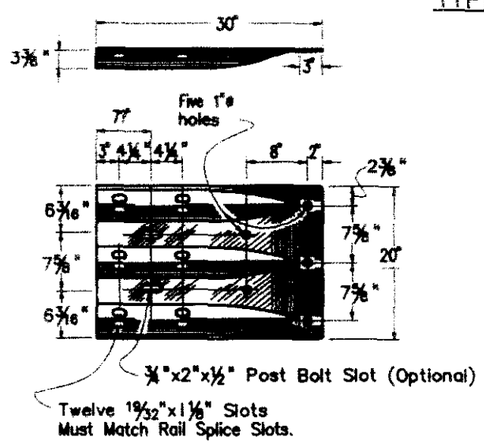

THRIE BEAM TERMINAL SECTION (CONNECTOR)

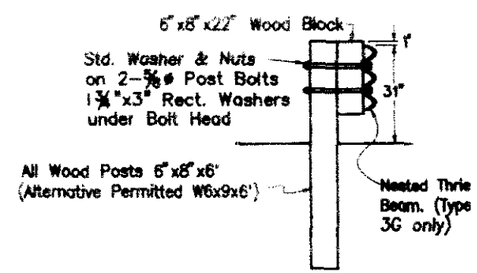

B20 H SECTION

NOTES:

Type 3G end anchorage is for use at both ends of bridges on two-way roads, and at the approach end of bridges on one-way roads.

Backup plate not required at posts on 3G.

⊡ This shows rectangular washer is required under post bolt head.

	INITIAL	DATE
DESIGNED BY	GAT	6/90
CHECKED BY	GAT	6/90
DRAWN BY	GAT	6/90
QUANTITIES BY	TAR	6/90
CHECKED BY		
DETAILED BY		
CHECKED BY		

BRW INC. 1775 LAWRENCE ST., SUITE 200, DENVER, CO 80202

DEPARTMENT OF TRANSPORTATION
S.H.47 OVER TROY AVENUE
PUEBLO, COLORADO

BRIDGE RAIL TYPE 10
SPECIAL

Designer G. Tsiouvaras	Structure Numbers	K-18-GA
Detailer K. Erickson		
Drawing Number B20 of 31		Drawings

Revision Dates (Preliminary Stage Only)

F1178

VIEW NAME: PW DRAWING NAME: G:\DATA\1718\CADD\STRUC\TROY\478BR03 DATE 10-24-1990 TIME 10:34:56

STATE DEPARTMENT OF HIGHWAYS
DIVISION OF HIGHWAYS
D. O. H. FORM NO. 117
REV. APR. 1966

AS CONSTRUCTED			
NO REVISIONS	REVISED	VOID	

FEDERAL ROAD REGION NO.	DIVISION	PROJECT NUMBER	SHEET NO.
VIII	COLORADO	STA 0471-020	41

B-606-10

REVISIONS		

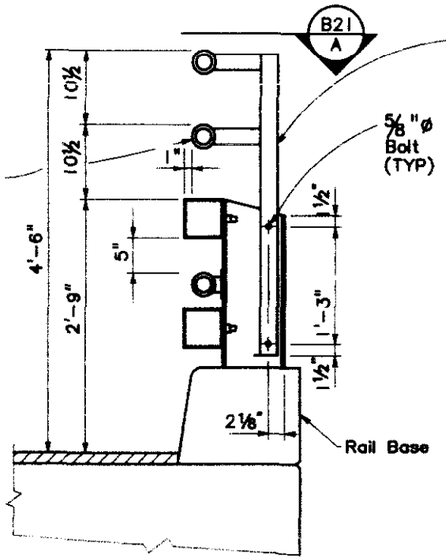

BICYCLE RAILING DETAIL

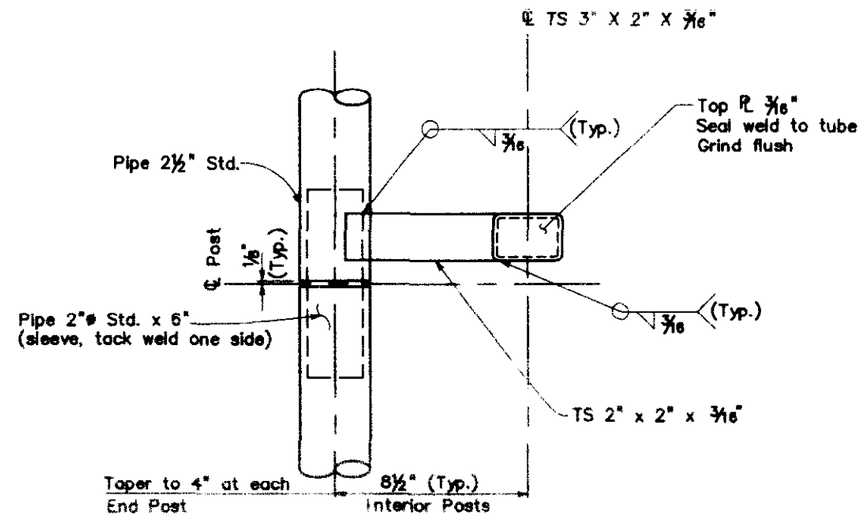

B21 A SECTION

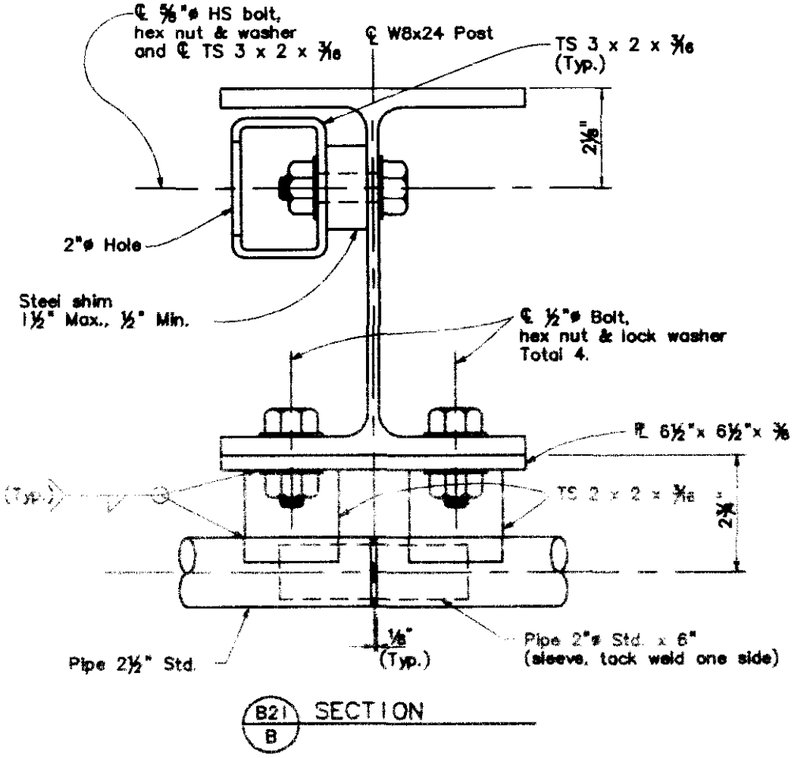

B21 B SECTION

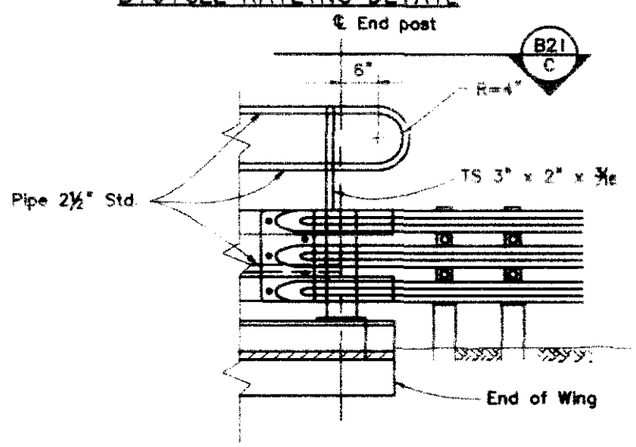

BICYCLE RAILING TERMINAL DETAIL

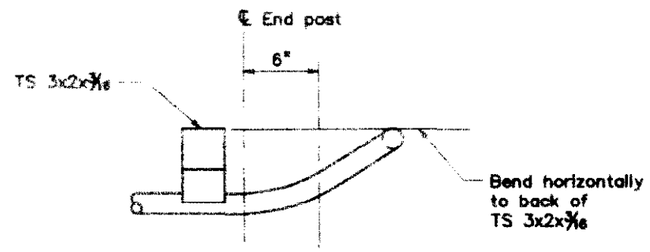

B21 C SECTION

NOTE:
Attach bicycle railing to outside bridge rail of structure Nos. K-18-EX and K-18-GA. For details not shown, refer to Dwg. Nos. B18, B19 & B31. Cost of bicycle railing shall be included in Item 606, Bridge Rail Type 10 Special.

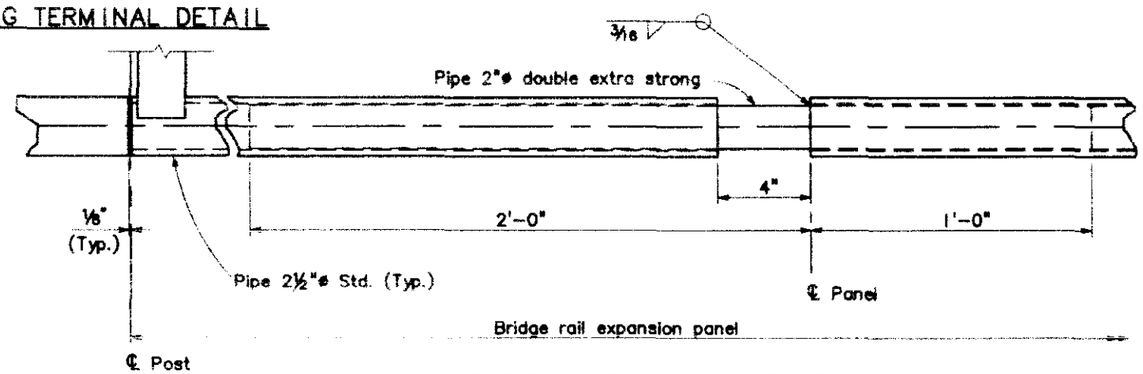

BICYCLE RAIL EXPANSION PANEL

INITIAL	DATE
DESIGNED BY GMT	5/95
CHECKED BY GMT	5/95
QUANTITIES BY YAN	5/95
CHECKED BY	5/95
DETAILED BY	
CHECKED BY	
DATE	

BRW INC. 1225 LAWRENCE ST., SUITE 200, DENVER, CO 80202
PLANNING TRANSPORTATION ENGINEERING URBAN DESIGN

DEPARTMENT OF TRANSPORTATION
S.H.47 OVER TROY AVENUE
PUEBLO, COLORADO

BRIDGE RAIL TYPE 10 SPECIAL

Designer G. Tsiouvaras	Structure Numbers	K-18-GA	
Detailer K. Erickson			
Drawing Number B21 of 31 Drawings			

Revision Dates (Preliminary Stage Only)

F1178
SCALES: NONE

VIEW NAME: PW DRAWING NAME: C:\DATA\1718\CADD\STRUC\TROY\47BBR05 DATE: 05-24-1995 TIME: 12:53:48

STATE DEPARTMENT OF HIGHWAYS
DIVISION OF HIGHWAYS
D. O. H. FORM NO. 117
REV. APR. 1986

AS CONSTRUCTED		
NO REVISIONS	REVISED	VOID

FEDERAL ROAD REGION NO.	DIVISION	PROJECT NUMBER	SHEET NO.
VIII	COLORADO	STA 0471-020	42

REVISIONS		

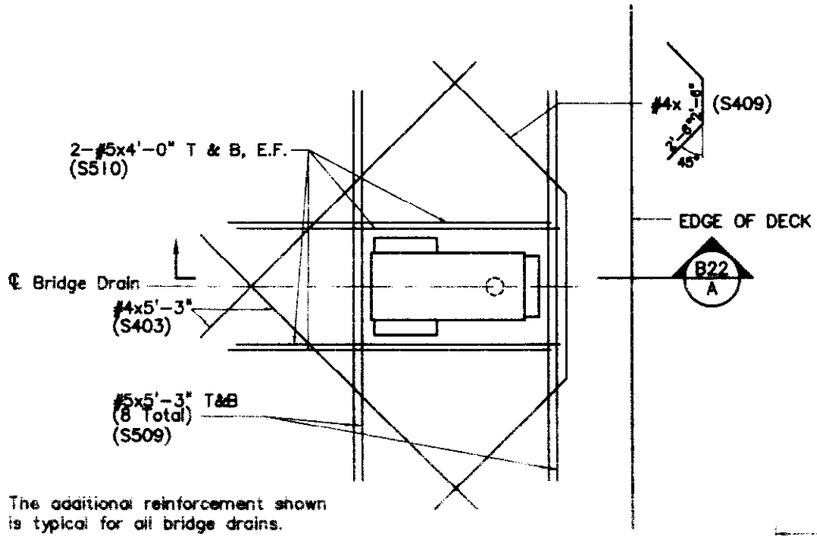

The additional reinforcement shown is typical for all bridge drains.

Epoxy coat top bars.

PLAN

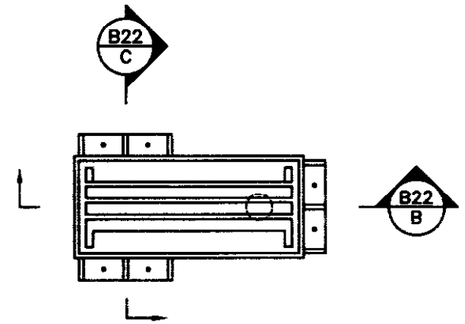

PLAN

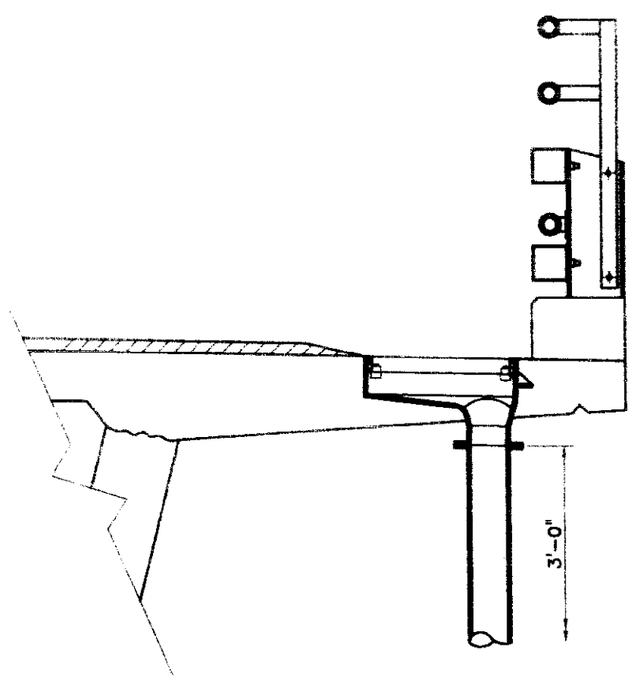

B22 A SECTION

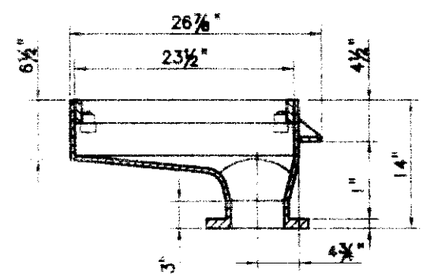

B22 B SECTION

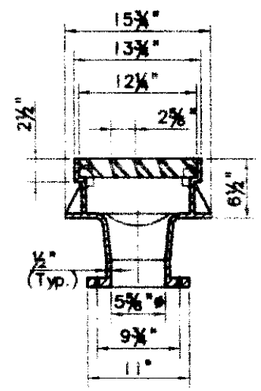

B22 C SECTION

NOTES:

For location of bridge drains, see Construction Layout. Dwg. No. B5.

Cut slab reinforcing bars to clear Bridge Drains. Additional #5 Bars shall be set between top and bottom slab bars. Bend bridge rail reinforcing to clear drain.

Bridge drains shall be placed and secured at the locations shown on the plans prior to the placement of concrete. Prior to fabrication, two sets of shop drawings which comply with the requirements of Section 105 shall be submitted to the Department for information only. One set shall be sent to the Colorado Department of Transportation, Staff Materials Branch, Materials Inspection Unit, 4340 E. Louisiana Avenue, Denver, Colorado 80222, one set shall be sent to the Engineer.

Metal used in the manufacture of castings shall meet the requirements of ASTM A48 Class 35B, and shall not be Painted or galvanized.

Drawings for alternate welded steel bridge drains may be submitted to the Engineer for approval. Welded steel drains shall be galvanized after fabrication in accordance with AASHTO M111.

Payment for bridge drains will be made under Item 513, Bridge Drain (Special).

INITIAL	DATE
DESIGNED BY GHT	5/95
CHECKED BY GHT	5/95
QUANTITIES BY TJM	5/95
DETAILED BY KE	5/95
CHECKED BY GHT	5/95

DEPARTMENT OF TRANSPORTATION
S.H.47 OVER TROY AVENUE
PUEBLO, COLORADO

BRIDGE DRAIN DETAILS

Designer G. Tsiouvaras	Structure Numbers	K-18-GA
Detailer K. Erickson		
Drawing Number B22 of 31		Drawings

BRW INC. PLANNING TRANSPORTATION ENGINEERING URBAN DESIGN
BRW INC. 1225 LAWRENCE ST., SUITE 200, DENVER, CO 80202

Revision Dates (Preliminary Stage Only)

F117B
JREFS NONE

VIEW NAME PW | DRAWING NAME C:\DATA\1718\CADD\STRUC\TROY\47BDR01 | DATE 10-24-1995 | TIME 10:58:19

STATE DEPARTMENT OF HIGHWAYS
DIVISION OF HIGHWAYS
D. O. H. FORM NO. 117
REV. APR. 1966

AS CONSTRUCTED		
NO REVISIONS	REVISED	VOID

FEDERAL ROAD REGION NO.	DIVISION	PROJECT NUMBER	SHEET NO.
VIII	COLORADO	STA 0471-020	43

REVISIONS

B-601-1A

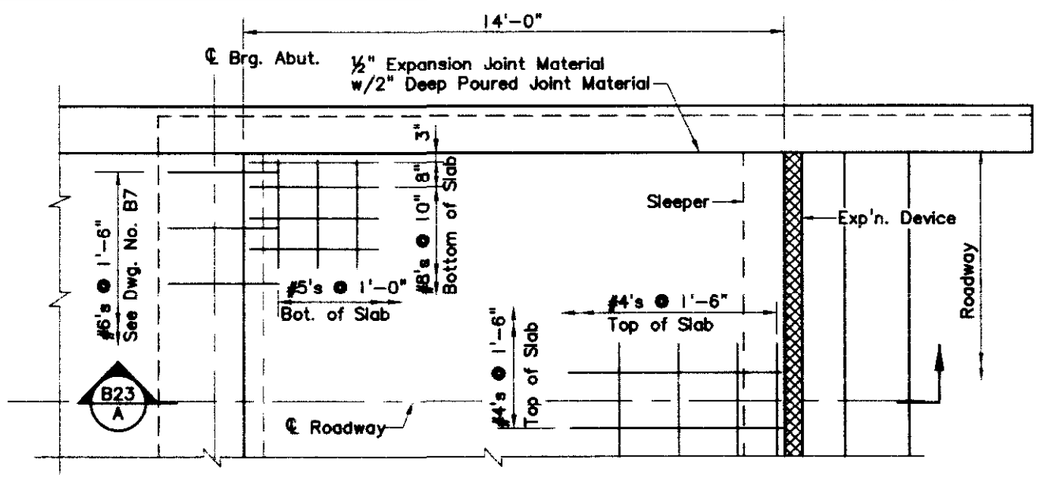

PLAN

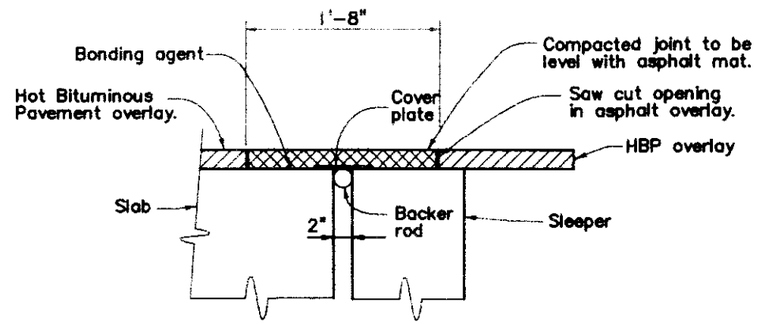

JOINT DETAIL

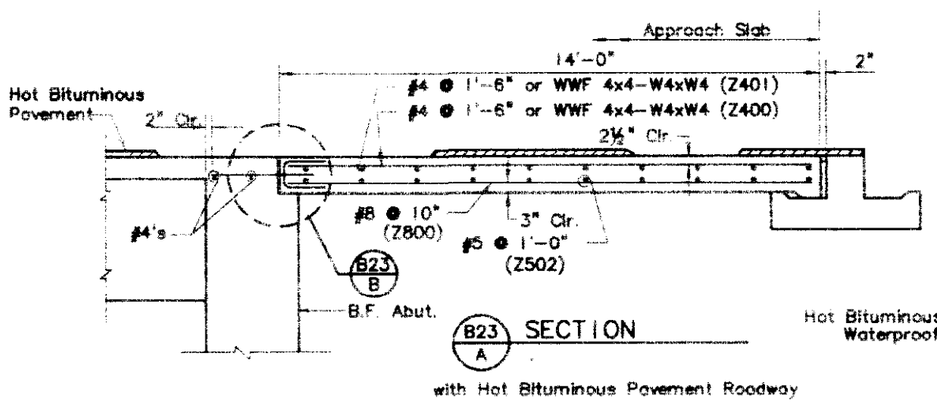

B23 A SECTION

with Hot Bituminous Pavement Roadway

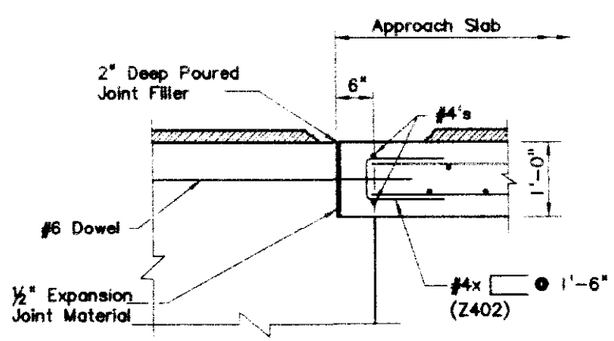

B23 B DETAIL

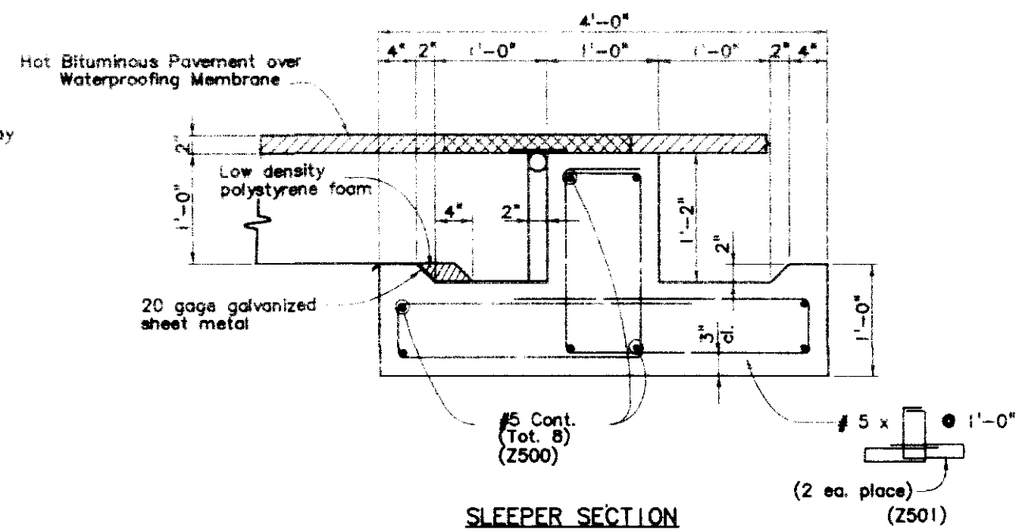

SLEEPER SECTION

Taken normal to expansion device
Sleeper may be precast.

NOTES

Concrete Class D (Bridge) shall be used for approach slabs.

½" expansion joint material shall meet A.A.S.H.T.O. Spec. M213.

The expansion joint system shall include all labor and materials to install the expansion joint according to the Manufacturer's directions and according to these plans.

The backer rod shall be secured and sealed according to the Manufacturer's directions.

The cover plate shall be the size and type recommended by the Manufacturer and installed in accordance with the Manufacturer's directions.

The joint bonding agent shall be the type recommended by the Manufacturer for the joint system being installed. It shall be applied according to the Manufacturer's recommendations.

All surfaces in joint opening shall be cleaned according to the Manufacturer's directions.

The joints shall be installed and compacted according to the Manufacturer's procedures.

The finished joint, after compacting, shall be flush with the top of the adjacent asphalt surface.

A representative of the Manufacturer shall be on site prior to installing the expansion joints and shall approve the methods and materials before work commences.

See Special Provisions for Bridge Expansion Device (0"-2")

ACCEPTABLE ALTERNATES

Koch B J S System
Linear Dynamics Thorma-Joint
Watson Bowman Acme Expandex

INITIAL	DATE
DESIGNED BY GRY	5/95
CHECKED BY GRY	5/95
QUANTITIES BY TAR	5/95
DETAILED BY TAR	5/95
CHECKED BY	5/95

DEPARTMENT OF TRANSPORTATION
S.H.47 OVER TROY AVENUE
PUEBLO, COLORADO

APPROACH SLAB DETAILS

Designer G. Tsiouvaras	Structure Numbers	K-18-GA
Detailer K. Erickson		
Drawing Number B23 of 31 Drawings		

BRW INC. 1225 LAWRENCE ST., SUITE 200, DENVER, CO 80202
PLANNING TRANSPORTATION ENGINEERING URBAN DESIGN

Revision Dates (Preliminary Stage Only)

F 11 78
SHEETS: NONE

VIEW NAME: PW | DRAWING NAME: C:\DATA\1718\CADD\STRUC\TROY\47BAP01 | DATE: 10-24-1995 | TIME: 10:59:38

STATE DEPARTMENT OF HIGHWAYS
DIVISION OF HIGHWAYS
D. O. H. FORM NO. 117.
REV APR. 1986

AS CONSTRUCTED			
NO REVISIONS		REVISED		VOID	

FEDERAL ROAD REGION NO.	DIVISION	PROJECT NUMBER	SHEET NO.
VIII	COLORADO	STA 0471-020	44

REVISIONS		

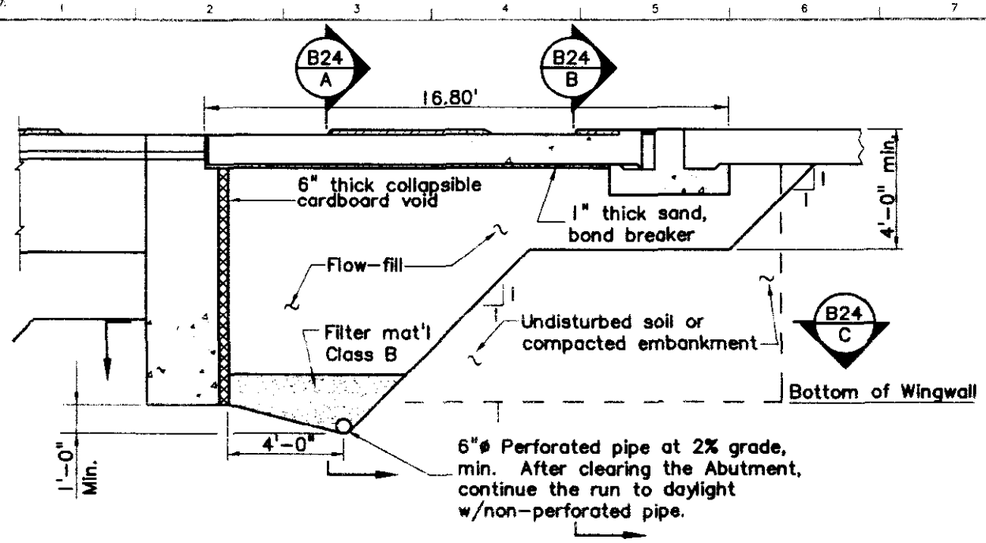

SECTION PERPENDICULAR TO ABUTMENT

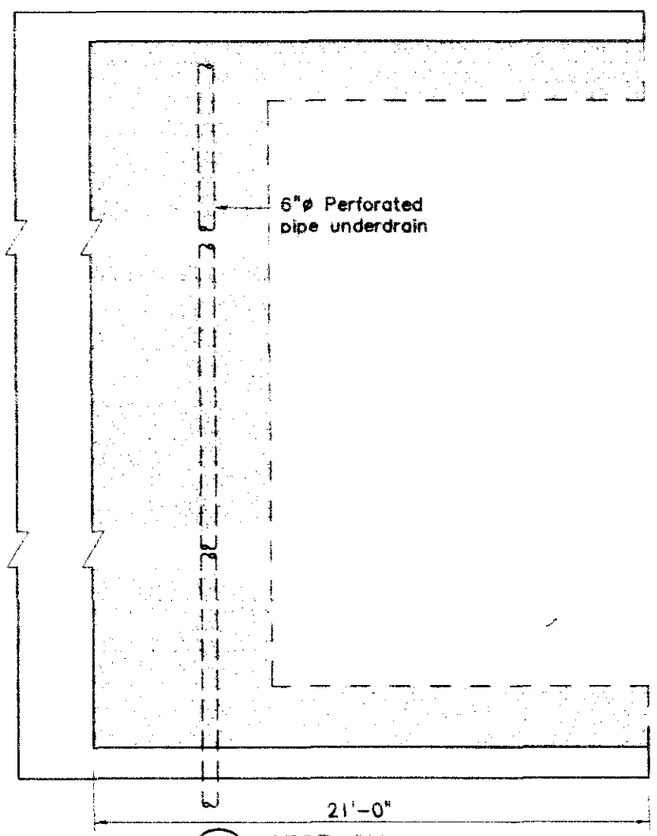

B24 C SECTION

(Symmetrical about ℄)

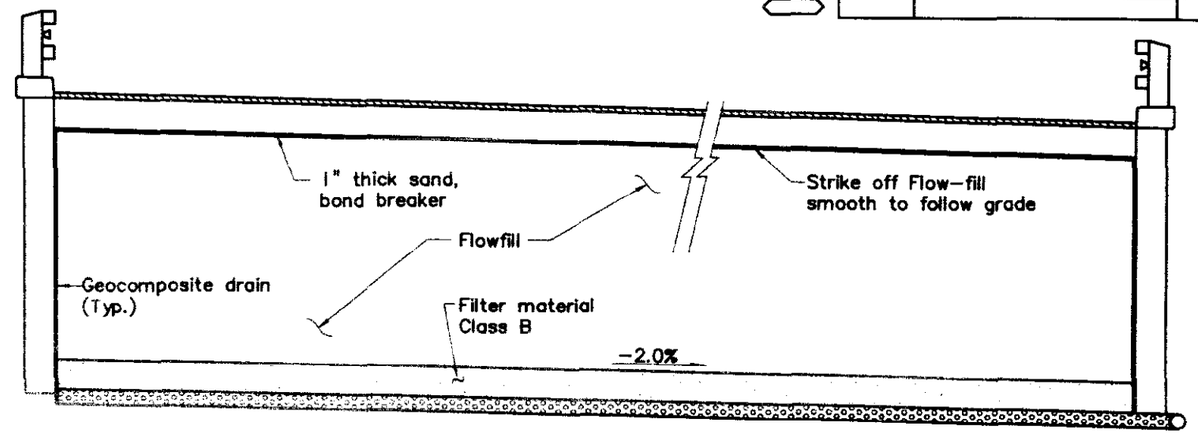

B24 A SECTION

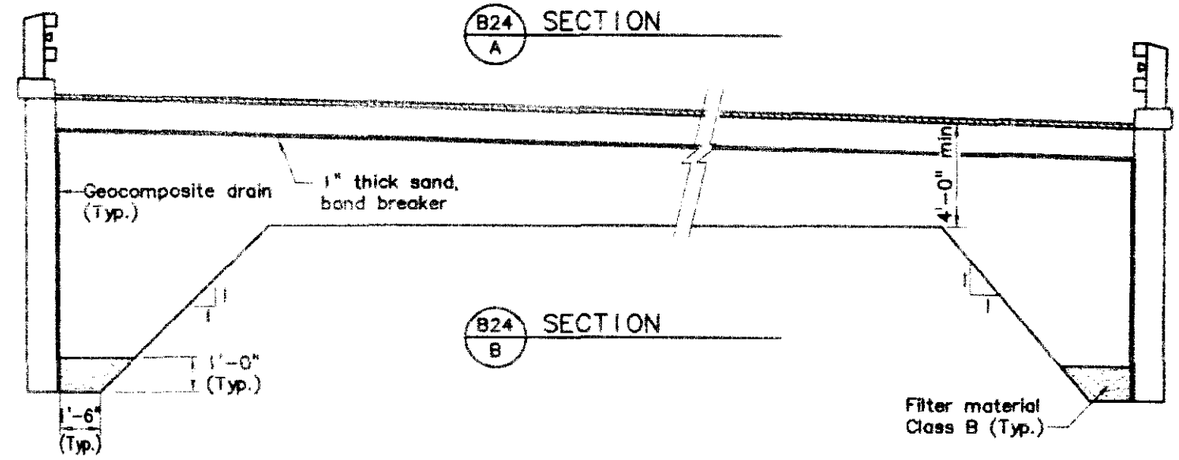

B24 B SECTION

6" Perforated Pipe Underdrain includes all Filter material and Geotextile. Quantity shown is measured along the Perforated Pipe from inside face to inside face of wingwalls.

For Information Only

Item No.	Description	Units	Location Abut. 1	Location Abut. 2
605	6" Perforated Pipe Underdrain	Lin. Ft.	37	37
605	Geocomposite Drain	Sq. Yd.	50	50
605	Subsurface Drain Outlet	Lin Ft.	30	30

Sand bond breaker, cardboard void, Geocomposite Drain, 6" Perforated Pipe Underdrain, and Subsurface Drain Outlet (6" nonperforated pipe) will not be measured or paid for separately but shall be included in the work.

Installation of Perforated Pipe Underdrain, Subsurface Drain Outlet, and Geocomposite Drain will conform to the Construction requirement of section 605.03, 605.06 and 605.04, respectively.

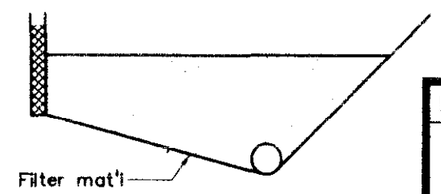

FILTER FABRIC DETAIL

BRW INC. 1225 LAWRENCE ST., SUITE 300, DENVER, CO 80202
PLANNING TRANSPORTATION ENGINEERING URBAN DESIGN

DEPARTMENT OF TRANSPORTATION
S.H.47 OVER TROY AVENUE
PUEBLO, COLORADO

STRUCTURE BACKFILL (FLOW-FILL)

Designer G. Tsiouvaras	Structure Numbers	K-18-GA	
Detailer K. Erickson			
Drawing Number B24 of 31			Drawings

DESIGNED BY	INITIAL	DATE
CHECKED BY	GMT	9/93
DETAILED BY	PWE	9/93
	KDE	9/93

CHECKED BY	INITIAL	DATE
QUANTITIES BY	GMT	9/93
CHECKED BY	GMT	9/93
	TJM	9/93

Revision Dates (Preliminary Stage Only)

VIEW NAME: PW DRAWING NAME: C:\DATA\118\CADD\STRUC\TROY\47SIAP02 DATE 10-24-1995 TIME 11:01:27

117B
KRIS'S HOME

STATE DEPARTMENT OF HIGHWAYS
DIVISION OF HIGHWAYS:
D. O. H. FORM NO. 117:
REV. APR. 1990

AS CONSTRUCTED		
NO REVISIONS	REVISED	VOID

FEDERAL ROAD REGION NO.	DIVISION	PROJECT NUMBER	SHEET NO.
VIII	COLORADO	STA 0471-020	45

REVISIONS		

BAR LIST – ABUTMENT NO. 1

MARK	NO. REQ'D.	LENGTH	TYPE	DIMENSIONS A	DIMENSIONS B	DIMENSIONS C
1A900	8	39'-8"				
1A600	80	21'-2"	VIII	9'-6"	2'-2"	
1A601	80	4'-2"	VI	1'-0"	2'-2"	
1A500	8	39'-8"				
1A800	42	8'-3"	IV	1'-4"	5'-7"	
1A802	42	4'-6"	IX	1'-0"	3'-6"	
1A801	44	24'-0"				
1A501	2	25'-0"				
1A400	16	24'-8"	IX	0'-8"	24'-0"	
1A901	8	28'-0"				
1A401	34	18'-8"	VIII	9'-0"	0'-8"	
1A402	34	6'-8"	VI	3'-0"	0'-8"	
1A403	34	3'-0"	X	0'-4"	0'-8"	2'-0"

BAR SUMMARY

1359 LIN. FT. # 4 BARS @ 0.668 LB./FT. = 908 LBS.
288 LIN. FT. # 5 BARS @ 1.043 LB./FT. = 300 LBS.
2216 LIN. FT. # 6 BARS @ 1.502 LB./FT. = 3328 LBS.
1403 LIN. FT. # 8 BARS @ 2.670 LB./FT. = 3746 LBS.
485 LIN. FT. # 9 BARS @ 3.400 LB./FT. = 1650 LBS.
TOTAL = 9932 LBS.

BAR LIST – ABUTMENT NO. 2

MARK	NO. REQ'D.	LENGTH	TYPE	DIMENSIONS A	DIMENSIONS B	DIMENSIONS C
2A900	8	39'-8"				
2A600	80	22'-2"	VIII	10'-0"	2'-2"	
2A601	80	4'-2"	VI	1'-0"	2'-2"	
2A500	8	39'-8"				
2A800	41	8'-3"	IV	1'-4"	5'-7"	
2A802	41	4'-6"	IX	1'-0"	3'-6"	
2A801	43	24'-0"				
2A501	2	25'-0"				
2A400	15	24'-8"	IX	0'-8"	24'-0"	
2A901	8	28'-0"				
2A401	34	18'-8"	VIII	9'-0"	0'-8"	
2A402	34	6'-8"	VI	3'-0"	0'-8"	
2A403	34	3'-0"	X	0'-4"	0'-8"	2'-0"

BAR SUMMARY

1334 LIN. FT. # 4 BARS @ 0.668 LB./FT. = 891 LBS.
288 LIN. FT. # 5 BARS @ 1.043 LB./FT. = 300 LBS.
2291 LIN. FT. # 6 BARS @ 1.502 LB./FT. = 3388 LBS.
1370 LIN. FT. # 8 BARS @ 2.670 LB./FT. = 3659 LBS.
485 LIN. FT. # 9 BARS @ 3.400 LB./FT. = 1650 LBS.
TOTAL = 9888 LBS.

BAR LIST – APPROACH SLABS K-18-GA

MARK	NO. REQ'D.	LENGTH	TYPE	DIMENSIONS A	DIMENSIONS B	DIMENSIONS C
Z400	52	13'-6"				
Z401	20	37'-6"				
Z402	52	3'-0"	VII	1'-2"	0'-8"	
Z500	16	37'-6"				
Z501	156	7'-10"	V	(AS SHOWN)		
Z502	30	37'-6"				
Z800	92	13'-6"				

BAR SUMMARY

1606 LIN. FT. # 4 BARS @ 0.668 LB./FT. = 1074 LBS.
2946 LIN. FT. # 5 BARS @ 1.043 LB./FT. = 3073 LBS.
1242 LIN. FT. # 8 BARS @ 2.670 LB./FT. = 3316 LBS.
TOTAL = 7463 LBS.

BAR LIST – APPROACH SLABS K-18-EX

MARK	NO. REQ'D.	LENGTH	TYPE	DIMENSIONS A	DIMENSIONS B	DIMENSIONS C
Y400	58	13'-6"				
Y401	20	41'-6"				
Y402	58	3'-0"	VII	1'-2"	0'-8"	
Y500	16	41'-6"				
Y501	172	7'-10"	V	(AS SHOWN)		
Y502	30	41'-6"				
Y800	102	13'-6"				

BAR SUMMARY

1787 LIN. FT. # 4 BARS @ 0.668 LB./FT. = 1194 LBS.
3258 LIN. FT. # 5 BARS @ 1.043 LB./FT. = 3398 LBS.
1377 LIN. FT. # 8 BARS @ 2.670 LB./FT. = 3677 LBS.
TOTAL = 8267 LBS.

BAR LIST – SUPERSTRUCTURE

	MARK	NO. REQ'D.	LENGTH	TYPE	DIMENSIONS A	DIMENSIONS B	DIMENSIONS C
(E)	S400	81	168'-8"				
	S401	325	28'-4"	I	24'-10"	0'-9"	
(E)	S600	325	40'-0"				
	S601	325	40'-0"				
	S602	14	169'-10"				
	S603	33	169'-10"				
	S604	162	7'-8"	VI	3'-0"	1'-8"	
	S605	162	8'-2"	VI	3'-0"	2'-2"	
	S500	16	170'-2"				
	S501	9	170'-2"				
(E)	S503	652	8'-10"	VII	10"	7'-2"	
(E)	S504	326	9'-1"	II	7'-5"	10"	
(E)	S505	326	9'-1"	III	7'-5"	10"	
	S506	40	170'-2"				
	S507	28	39'-6"				
	S402	6	39'-6"				
	S508	4	40'-0"				
	S806	52	3'-6"				
	S800	8	40'-0"				
	S509	8	5'-3"				
	S510	8	4'-0"				
	S409	1	7'-6"	IV	2'-6"	2'-6"	
	S403	2	5'-3"				
	S807	12	9'-6"	XI	3'-6"	2'-0"	
	S808	12	8'-9"	XI	3'-0"	2'-0"	
	S408	176	1'-8"				
	S404	80	2'-8"	IX	1'-8"	1'-0"	
	S405	32	7'-0"				
	S406	120	2'-0"	XII	0'-8"	0'-8"	0'-8"
	S407	48	7'-0"				

BAR SUMMARY

10102 LIN. FT. # 4 BARS @ 0.668 LB./FT. = 6748 LBS.
12401 LIN. FT. # 5 BARS @ 1.043 LB./FT. = 12934 LBS.
23949 LIN. FT. # 6 BARS @ 1.502 LB./FT. = 35969 LBS.
320 LIN. FT. # 9 BARS @ 3.400 LB./FT. = 1088 LBS.
TOTAL = 56739 LBS.
(E) 13662 LIN. FT. # 4 BARS @ 0.668 LB./FT. = 9126 LBS.
(E) 11679 LIN. FT. # 5 BARS @ 1.043 LB./FT. = 13559 LBS.
(E) 13000 LIN. FT. # 6 BARS @ 1.502 LB./FT. = 19526 LBS.
(E) TOTAL = 42211 LBS.

NOTE: Any Reinforcing paid for in items other than Item 602, Reinforcing Steel are not shown on the bar list.

BAR LIST–APPROACH SLAB CORBEL K-18-EX

MARK	NO. REQ'D.	LENGTH	TYPE	DIMENSIONS A	DIMENSIONS B	DIMENSIONS C
X600	58	3'-6"	XV	2'-0"	1'-6"	
X601	86	2'-8"	XIII	0'-7"	2'-1"	
X602	86	3'-2"	XIV	0'-7"	0'-7"	2'-0"
X500	8	41'-6"				

BAR SUMMARY

332 LIN. FT. # 5 BARS @ 1.043 LB./FT. = 346 LBS.
705 LIN. FT. # 6 BARS @ 1.502 LB./FT. = 1059 LBS.
TOTAL = 1405 LBS.

BENDING DIAGRAMS

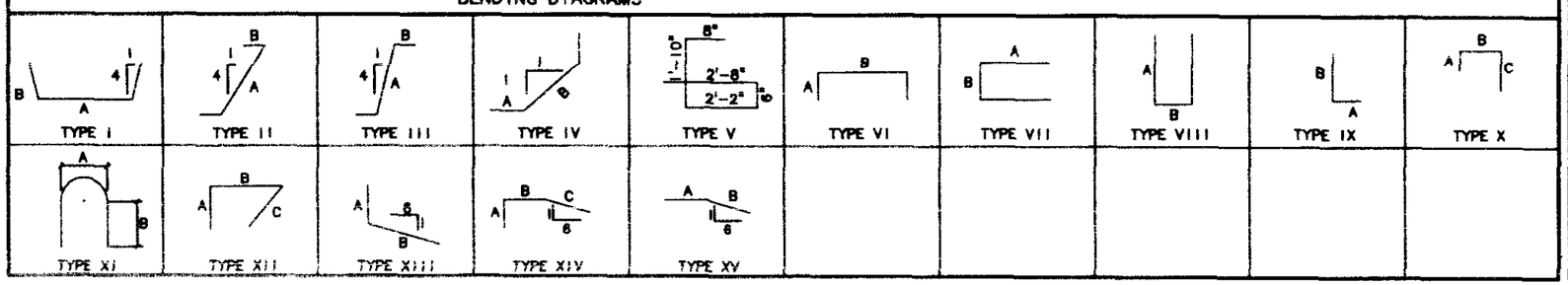

LEGEND

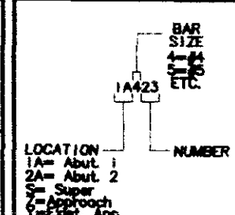

DEPARTMENT OF TRANSPORTATION
S.H. 47 OVER TROY AVENUE
PUEBLO, COLORADO

BAR LISTS

Designer G. Tsiouvaras	Structure	K-18-GA	
Detailer K. Erickson	Numbers	K-18-EX	
Drawing Number 825 of 31			Drawings

INITIAL	DATE
DESIGNED BY GMT	9/96
CHECKED BY GMT	9/96
QUANTITIES BY TJM	9/96
DETAILED BY KDE	9/96
CHECKED BY PW	9/96
CHECKED BY	

Revision Dates (Preliminary Stage Only)

VIEW NAME: PW | DRAWING NAME: C:\DATA\1718\CADD\STRUC\TROY\478BL1 | DATE: 10-31-1995 | TIME: 09:45:39

1178
KRISS: NONE

STATE OF COLORADO
STATE DEPARTMENT OF HIGHWAYS
DIVISION OF HIGHWAYS:
D. O. H. FORM NO. 117.
REV APR 1966

BENT LINE DESCRIPTION OR FRACTIONAL POINT DESIGNATION	STATION	OFFSET	ELEVATION	CROSS SLOPE	COORDINATES FROM LAYOUT LINE OFFSET X	COORDINATES FROM LAYOUT LINE OFFSET Y	BENT LINE LENGTH FROM Y-AXIS or OFFSET FROM EXTERIOR GIRDER	GIRDER LINE LENGTH
LONGITUDINAL LINE: NORTH EDGE DECK								
END OF WW	140+34.5000	-5.2500	4820.9167	+0.020000	-5.2500	-22.0000	-5.2500	-22.0000
BF ABUT 1	140+56.5000	-5.2500	4820.7296	+0.020000	-5.2500	0.0000	-5.2500	0.0000
CL ABUT 1	140+57.7500	-5.2500	4820.7189	+0.020000	-5.2500	1.2500	-5.2500	1.2500
FF ABUT 1	140+59.0000	-5.2500	4820.7083	+0.020000	-5.2500	2.5000	-5.2500	2.5000
F-1	140+66.0000	-5.2500	4820.6488	+0.020000	-5.2500	9.5000		9.5000
F-2	140+74.2500	-5.2500	4820.5796	+0.020000	-5.2500	17.7500		17.7500
F-3	140+82.5000	-5.2500	4820.5095	+0.020000	-5.2500	26.0000		26.0000
F-4	140+90.7500	-5.2500	4820.4383	+0.020000	-5.2500	34.2500		34.2500
F-5	140+99.0000	-5.2500	4820.3666	+0.020000	-5.2500	42.5000		42.5000
F-6	150+07.2500	-5.2500	4820.2923	+0.020000	-5.2500	50.7500		50.7500
F-7	150+15.5000	-5.2500	4820.2153	+0.020000	-5.2500	59.0000		59.0000
F-8	150+23.7500	-5.2500	4820.1357	+0.020000	-5.2500	67.2500		67.2500
F-9	150+32.0000	-5.2500	4820.0536	+0.020000	-5.2500	75.5000		75.5000
F-10	150+40.2500	-5.2500	4819.9697	+0.020000	-5.2500	83.7500		83.7500
F-11	150+48.5000	-5.2500	4819.8812	+0.020000	-5.2500	92.0000		92.0000
F-12	150+56.7500	-5.2500	4819.7911	+0.020000	-5.2500	100.2500		100.2500
F-13	150+65.0000	-5.2500	4819.6984	+0.020000	-5.2500	108.5000		108.5000
F-14	150+73.2500	-5.2500	4819.6031	+0.020000	-5.2500	116.7500		116.7500
F-15	150+81.5000	-5.2500	4819.5051	+0.020000	-5.2500	125.0000		125.0000
F-16	150+89.7500	-5.2500	4819.4046	+0.020000	-5.2500	133.2500		133.2500
F-17	150+98.0000	-5.2500	4819.3014	+0.020000	-5.2500	141.5000		141.5000
F-18	151+06.2500	-5.2500	4819.1955	+0.020000	-5.2500	149.7500		149.7500
F-19	151+14.5000	-5.2500	4819.0871	+0.020000	-5.2500	158.0000		158.0000
FF ABUT 2	151+21.5000	-5.2500	4819.0030	+0.020000	-5.2500	165.0000	-5.2500	165.0000
CL ABUT 2	151+22.7500	-5.2500	4818.8790	+0.020000	-5.2500	166.2500	-5.2500	166.2500
BF ABUT 2	151+24.0000	-5.2500	4818.6499	+0.020000	-5.2500	167.5000	-5.2500	167.5000
END WW	151+46.0000	-5.2500	4818.5488	+0.020000	-5.2500	189.5000	-5.2500	189.5000
LONGITUDINAL LINE: NORTH GUTTER LINE								
BF ABUT 1	140+56.5000	-4.0000	4820.7046	+0.020000	-4.0000	0.0000	-4.0000	0.0000
CL ABUT 1	140+57.7500	-4.0000	4820.6939	+0.020000	-4.0000	1.2500	-4.0000	1.2500
FF ABUT 1	140+59.0000	-4.0000	4820.6833	+0.020000	-4.0000	2.5000	-4.0000	2.5000
F-1	140+66.0000	-4.0000	4820.6238	+0.020000	-4.0000	9.5000		9.5000
F-2	140+74.2500	-4.0000	4820.5536	+0.020000	-4.0000	17.7500		17.7500
F-3	140+82.5000	-4.0000	4820.4835	+0.020000	-4.0000	26.0000		26.0000
F-4	140+90.7500	-4.0000	4820.4133	+0.020000	-4.0000	34.2500		34.2500
F-5	140+99.0000	-4.0000	4820.3416	+0.020000	-4.0000	42.5000		42.5000
F-6	150+07.2500	-4.0000	4820.2673	+0.020000	-4.0000	50.7500		50.7500
F-7	150+15.5000	-4.0000	4820.1903	+0.020000	-4.0000	59.0000		59.0000
F-8	150+23.7500	-4.0000	4820.1107	+0.020000	-4.0000	67.2500		67.2500
F-9	150+32.0000	-4.0000	4820.0286	+0.020000	-4.0000	75.5000		75.5000
F-10	150+40.2500	-4.0000	4819.9437	+0.020000	-4.0000	83.7500		83.7500
F-11	150+48.5000	-4.0000	4819.8562	+0.020000	-4.0000	92.0000		92.0000
F-12	150+56.7500	-4.0000	4819.7661	+0.020000	-4.0000	100.2500		100.2500
F-13	150+65.0000	-4.0000	4819.6734	+0.020000	-4.0000	108.5000		108.5000
F-14	150+73.2500	-4.0000	4819.5781	+0.020000	-4.0000	116.7500		116.7500
F-15	150+81.5000	-4.0000	4819.4801	+0.020000	-4.0000	125.0000		125.0000
F-16	150+89.7500	-4.0000	4819.3796	+0.020000	-4.0000	133.2500		133.2500
F-17	150+98.0000	-4.0000	4819.2764	+0.020000	-4.0000	141.5000		141.5000
F-18	151+06.2500	-4.0000	4819.1705	+0.020000	-4.0000	149.7500		149.7500
F-19	151+14.5000	-4.0000	4819.0621	+0.020000	-4.0000	158.0000		158.0000
FF ABUT 2	151+21.5000	-4.0000	4818.9785	+0.020000	-4.0000	165.0000	-4.0000	165.0000
CL ABUT 2	151+22.7500	-4.0000	4818.8610	+0.020000	-4.0000	166.2500	-4.0000	166.2500
BF ABUT 2	151+24.0000	-4.0000	4818.6338	+0.020000	-4.0000	167.5000	-4.0000	167.5000
LONGITUDINAL LINE: PROJECT CL								
BF ABUT 1	140+56.5000	0.0000	4820.6348		0.0000	0.0000	0.0000	0.0000
CL ABUT 1	140+57.7500	0.0000	4820.6139		0.0000	1.2500	0.0000	1.2500
FF ABUT 1	140+59.0000	0.0000	4820.6033		0.0000	2.5000	0.0000	2.5000
F-1	140+66.0000	0.0000	4820.5436		0.0000	9.5000		9.5000
F-2	140+74.2500	0.0000	4820.4736		0.0000	17.7500		17.7500
F-3	140+82.5000	0.0000	4820.4035		0.0000	26.0000		26.0000
F-4	140+90.7500	0.0000	4820.3333		0.0000	34.2500		34.2500
F-5	140+99.0000	0.0000	4820.2616		0.0000	42.5000		42.5000
F-6	150+07.2500	0.0000	4820.1873		0.0000	50.7500		50.7500
F-7	150+15.5000	0.0000	4820.1103		0.0000	59.0000		59.0000
F-8	150+23.7500	0.0000	4820.0307		0.0000	67.2500		67.2500
F-9	150+32.0000	0.0000	4819.9486		0.0000	75.5000		75.5000
F-10	150+40.2500	0.0000	4819.8637		0.0000	83.7500		83.7500
F-11	150+48.5000	0.0000	4819.7762		0.0000	92.0000		92.0000
F-12	150+56.7500	0.0000	4819.6861		0.0000	100.2500		100.2500
F-13	150+65.0000	0.0000	4819.5934		0.0000	108.5000		108.5000
F-14	150+73.2500	0.0000	4819.4981		0.0000	116.7500		116.7500
F-15	150+81.5000	0.0000	4819.4001		0.0000	125.0000		125.0000
F-16	150+89.7500	0.0000	4819.2996		0.0000	133.2500		133.2500
F-17	150+98.0000	0.0000	4819.1964		0.0000	141.5000		141.5000
F-18	151+06.2500	0.0000	4819.0905		0.0000	149.7500		149.7500
F-19	151+14.5000	0.0000	4818.9821		0.0000	158.0000		158.0000
FF ABUT 2	151+21.5000	0.0000	4818.8980		0.0000	165.0000	0.0000	165.0000
CL ABUT 2	151+22.7500	0.0000	4818.8710		0.0000	166.2500	0.0000	166.2500
BF ABUT 2	151+24.0000	0.0000	4818.8539		0.0000	167.5000	0.0000	167.5000
LONGITUDINAL LINE: WP WEB 1								
BF ABUT 1	140+56.5000	0.7500	4820.6088	-0.020000	0.7500	0.0000	0.7500	0.0000
CL ABUT 1	140+57.7500	0.7500	4820.5988	-0.020000	0.7500	1.2500	0.7500	1.2500
FF ABUT 1	140+59.0000	0.7500	4820.5883	-0.020000	0.7500	2.5000	0.7500	2.5000
F-1	140+66.0000	0.7500	4820.5288	-0.020000	0.7500	9.5000		9.5000
F-2	140+74.2500	0.7500	4820.4588	-0.020000	0.7500	17.7500		17.7500
F-3	140+82.5000	0.7500	4820.3886	-0.020000	0.7500	26.0000		26.0000
F-4	140+90.7500	0.7500	4820.3183	-0.020000	0.7500	34.2500		34.2500
F-5	140+99.0000	0.7500	4820.2466	-0.020000	0.7500	42.5000		42.5000
F-6	150+07.2500	0.7500	4820.1723	-0.020000	0.7500	50.7500		50.7500
F-7	150+15.5000	0.7500	4820.0953	-0.020000	0.7500	59.0000		59.0000
F-8	150+23.7500	0.7500	4820.0157	-0.020000	0.7500	67.2500		67.2500
F-9	150+32.0000	0.7500	4819.9336	-0.020000	0.7500	75.5000		75.5000
F-10	150+40.2500	0.7500	4819.8487	-0.020000	0.7500	83.7500		83.7500
F-11	150+48.5000	0.7500	4819.7612	-0.020000	0.7500	92.0000		92.0000
F-12	150+56.7500	0.7500	4819.6711	-0.020000	0.7500	100.2500		100.2500
F-13	150+65.0000	0.7500	4819.5784	-0.020000	0.7500	108.5000		108.5000
F-14	150+73.2500	0.7500	4819.4831	-0.020000	0.7500	116.7500		116.7500
F-15	150+81.5000	0.7500	4819.3851	-0.020000	0.7500	125.0000		125.0000
F-16	150+89.7500	0.7500	4819.2846	-0.020000	0.7500	133.2500		133.2500
F-17	150+98.0000	0.7500	4819.1814	-0.020000	0.7500	141.5000		141.5000
F-18	151+06.2500	0.7500	4819.0755	-0.020000	0.7500	149.7500		149.7500
F-19	151+14.5000	0.7500	4818.9671	-0.020000	0.7500	158.0000		158.0000
FF ABUT 2	151+21.5000	0.7500	4818.8830	-0.020000	0.7500	165.0000	0.7500	165.0000
CL ABUT 2	151+22.7500	0.7500	4818.8560	-0.020000	0.7500	166.2500	0.7500	166.2500
BF ABUT 2	151+24.0000	0.7500	4818.8389	-0.020000	0.7500	167.5000	0.7500	167.5000
LONGITUDINAL LINE: CL WEB 2								
BF ABUT 1	140+56.5000	10.2500	4820.4196	-0.020000	10.2500	0.0000	10.2500	0.0000
CL ABUT 1	140+57.7500	10.2500	4820.4089	-0.020000	10.2500	1.2500	10.2500	1.2500
FF ABUT 1	140+59.0000	10.2500	4820.3983	-0.020000	10.2500	2.5000	10.2500	2.5000
F-1	140+66.0000	10.2500	4820.3388	-0.020000	10.2500	9.5000		9.5000
F-2	140+74.2500	10.2500	4820.2688	-0.020000	10.2500	17.7500		17.7500
F-3	140+82.5000	10.2500	4820.1985	-0.020000	10.2500	26.0000		26.0000
F-4	140+90.7500	10.2500	4820.1283	-0.020000	10.2500	34.2500		34.2500
F-5	140+99.0000	10.2500	4820.0566	-0.020000	10.2500	42.5000		42.5000
F-6	150+07.2500	10.2500	4819.9823	-0.020000	10.2500	50.7500		50.7500
F-7	150+15.5000	10.2500	4819.9053	-0.020000	10.2500	59.0000		59.0000
F-8	150+23.7500	10.2500	4819.8257	-0.020000	10.2500	67.2500		67.2500
F-9	150+32.0000	10.2500	4819.7436	-0.020000	10.2500	75.5000		75.5000
F-10	150+40.2500	10.2500	4819.6587	-0.020000	10.2500	83.7500		83.7500
F-11	150+48.5000	10.2500	4819.5712	-0.020000	10.2500	92.0000		92.0000
F-12	150+56.7500	10.2500	4819.4811	-0.020000	10.2500	100.2500		100.2500
F-13	150+65.0000	10.2500	4819.3884	-0.020000	10.2500	108.5000		108.5000
F-14	150+73.2500	10.2500	4819.2931	-0.020000	10.2500	116.7500		116.7500
F-15	150+81.5000	10.2500	4819.1951	-0.020000	10.2500	125.0000		125.0000
F-16	150+89.7500	10.2500	4819.0946	-0.020000	10.2500	133.2500		133.2500
F-17	150+98.0000	10.2500	4818.9914	-0.020000	10.2500	141.5000		141.5000
F-18	151+06.2500	10.2500	4818.8855	-0.020000	10.2500	149.7500		149.7500
F-19	151+14.5000	10.2500	4818.7771	-0.020000	10.2500	158.0000		158.0000
FF ABUT 2	151+21.5000	10.2500	4818.6930	-0.020000	10.2500	165.0000	10.2500	165.0000
CL ABUT 2	151+22.7500	10.2500	4818.6660	-0.020000	10.2500	166.2500	10.2500	166.2500
BF ABUT 2	151+24.0000	10.2500	4818.6489	-0.020000	10.2500	167.5000	10.2500	167.5000
LONGITUDINAL LINE: CL WEB 3								
BF ABUT 1	140+56.5000	19.7500	4820.2298	-0.020000	19.7500	0.0000	19.7500	0.0000
CL ABUT 1	140+57.7500	19.7500	4820.2188	-0.020000	19.7500	1.2500	19.7500	1.2500
FF ABUT 1	140+59.0000	19.7500	4820.2083	-0.020000	19.7500	2.5000	19.7500	2.5000
F-1	140+66.0000	19.7500	4820.1488	-0.020000	19.7500	9.5000		9.5000
F-2	140+74.2500	19.7500	4820.0788	-0.020000	19.7500	17.7500		17.7500
F-3	140+82.5000	19.7500	4820.0085	-0.020000	19.7500	26.0000		26.0000
F-4	140+90.7500	19.7500	4819.9383	-0.020000	19.7500	34.2500		34.2500
F-5	140+99.0000	19.7500	4819.8666	-0.020000	19.7500	42.5000		42.5000
F-6	150+07.2500	19.7500	4819.7923	-0.020000	19.7500	50.7500		50.7500
F-7	150+15.5000	19.7500	4819.7153	-0.020000	19.7500	59.0000		59.0000
F-8	150+23.7500	19.7500	4819.6357	-0.020000	19.7500	67.2500		67.2500
F-9	150+32.0000	19.7500	4819.5535	-0.020000	19.7500	75.5000		75.5000
F-10	150+40.2500	19.7500	4819.4687	-0.020000	19.7500	83.7500		83.7500
F-11	150+48.5000	19.7500	4819.3812	-0.020000	19.7500	92.0000		92.0000
F-12	150+56.7500	19.7500	4819.2911	-0.020000	19.7500	100.2500		100.2500
F-13	150+65.0000	19.7500	4819.1984	-0.020000	19.7500	108.5000		108.5000
F-14	150+73.2500	19.7500	4819.1031	-0.020000	19.7500	116.7500		116.7500
F-15	150+81.5000	19.7500	4819.0051	-0.020000	19.7500	125.0000		125.0000
F-16	150+89.7500	19.7500	4818.9046	-0.020000	19.7500	133.2500		133.2500
F-17	150+98.0000	19.7500	4818.8014	-0.020000	19.7500	141.5000		141.5000
F-18	151+06.2500	19.7500	4818.6955	-0.020000	19.7500	149.7500		149.7500
F-19	151+14.5000	19.7500	4818.5871	-0.020000	19.7500	158.0000		158.0000
FF ABUT 2	151+21.5000	19.7500	4818.4030	-0.020000	19.7500	165.0000	19.7500	165.0000
CL ABUT 2	151+22.7500	19.7500	4818.4760	-0.020000	19.7500	166.2500	19.7500	166.2500
BF ABUT 2	151+24.0000	19.7500	4818.4589	-0.020000	19.7500	167.5000	19.7500	167.5000
LONGITUDINAL LINE: WP WEB 4								
BF ABUT 1	140+56.5000	29.2500	4820.0388	-0.020000	29.2500	0.0000	29.2500	0.0000
CL ABUT 1	140+57.7500	29.2500	4820.0289	-0.020000	29.2500	1.2500	29.2500	1.2500
FF ABUT 1	140+59.0000	29.2500	4820.0183	-0.020000	29.2500	2.5000	29.2500	2.5000
F-1	140+66.0000	29.2500	4819.9588	-0.020000	29.2500	9.5000		9.5000
F-2	140+74.2500	29.2500	4819.8888	-0.020000	29.2500	17.7500		17.7500
F-3	140+82.5000	29.2500	4819.8186	-0.020000	29.2500	26.0000		26.0000
F-4	140+90.7500	29.2500	4819.7483	-0.020000	29.2500	34.2500		34.2500
F-5	140+99.0000	29.2500	4819.6766	-0.020000	29.2500	42.5000		42.5000
F-6	150+07.2500	29.2500	4819.6023	-0.020000	29.2500	50.7500		50.7500
F-7	150+15.5000	29.2500	4819.5253	-0.020000	29.2500	59.0000		59.0000
F-8	150+23.7500	29.2500	4819.4457	-0.020000	29.2500	67.2500		67.2500
F-9	150+32.0000	29.2500	4819.3635	-0.020000	29.2500	75.5000		75.5000
F-10	150+40.2500	29.2500	4819.2787	-0.020000	29.2500	83.7500		83.7500
F-11	150+48.5000	29.2500	4819.1912	-0.020000	29.2500	92.0000		92.0000
F-12	150+56.7500	29.2500	4819.1011	-0.020000	29.2500	100.2500		100.2500
F-13	150+65.0000	29.2500	4819.0084	-0.020000	29.2500	108.5000		108.5000
F-14	150+73.2500	29.2500	4818.9131	-0.020000	29.2500	116.7500		116.7500
F-15	150+81.5000	29.2500	4818.8151	-0.020000	29.2500	125.0000		125.0000
F-16	150+89.7500	29.2500	4818.7146	-0.020000	29.2500	133.2500		133.2500
F-17	150+98.0000	29.2500	4818.6114	-0.020000	29.2500	141.5000		141.5000
F-18	151+06.2500	29.2500	4818.5055	-0.020000	29.2500	149.7500		149.7500
F-19	151+14.5000	29.2500	4818.3971	-0.020000	29.2500	158.0000		158.0000
FF ABUT 2	151+21.5000	29.2500	4818.3030	-0.020000	29.2500	165.0000	29.2500	165.0000
CL ABUT 2	151+22.7500	29.2500	4818.2860	-0.020000	29.2500	166.2500	29.2500	166.2500
BF ABUT 2	151+24.0000	29.2500	4818.2689	-0.020000	29.2500	167.5000	29.2500	167.5000
LONGITUDINAL LINE: SOUTH GUTTER LINE								
BF ABUT 1	140+56.5000	34.0000	4819.9448	-0.020000	34.0000	0.0000	34.0000	0.0000
CL ABUT 1	140+57.7500	34.0000	4819.9339	-0.020000	34.0000	1.2500	34.0000	1.2500
FF ABUT 1	140+59.0000	34.0000	4819.9233	-0.020000	34.0000	2.5000	34.0000	2.5000
F-1	140+66.0000	34.0000	4819.8638	-0.020000	34.0000	9.5000		9.5000
F-2	140+74.2500	34.0000	4819.7936	-0.020000	34.0000	17.7500		17.7500
F-3	140+82.5000	34.0000	4819.7235	-0.020000	34.0000	26.0000		26.0000
F-4	140+90.7500	34.0000	4819.6533	-0.020000	34.0000	34.2500		34.2500
F-5	140+99.0000	34.0000	4819.5816	-0.020000	34.0000	42.5000		42.5000
F-6	150+07.2500	34.0000	4819.5073	-0.020000	34.0000	50.7500		50.7500
F-7	150+15.5000	34.0000	4819.4303	-0.020000	34.0000	59.0000		59.0000
F-8	150+23.7500	34.0000	4819.3507	-0.020000	34.0000	67.2500		67.2500
F-9	150+32.0000	34.0000	4819.2685	-0.020000	34.0000	75.5000		75.5000
F-10	150+40.2500	34.0000	4819.1837	-0.020000	34.0000	83.7500		83.7500
F-11	150+48.5000	34.0000	4819.0962	-0.020000	34.0000	92.0000		92.0000
F-12	150+56.7500	34.0000	4819.0061	-0.020000	34.0000	100.2500		100.2500
F-13	150+65.0000	34.0000	4818.9134	-0.020000	34.0000	108.5000		108.5000
F-14	150+73.2500	34.0000	4818.8181	-0.020000	34.0000	116.7500		116.7500
F-15	150+81.5000	34.0000	4818.7201	-0.020000	34.0000	125.0000		125.0000
F-16	150+89.7500	34.0000	4818.6196	-0.020000	34.0000	133.2500		133.2500
F-17	150+98.0000	34.0000	4818.5164	-0.020000	34.0000	141.5000		141.5000
F-18	151+06.2500	34.0000	4818.4105	-0.020000	34.0000	149.7500		149.7500
F-19	151+14.5000	34.0000	4818.3021	-0.020000	34.0000	158.0000		158.0000
FF ABUT 2	151+21.5000	34.0000	4818.2180	-0.020000	34.0000	165.0000	34.0000	165.0000
CL ABUT 2	151+22.7500	34.0000	4818.1910	-0.020000	34.0000	166.2500	34.0000	166.2500
BF ABUT 2	151+24.0000	34.0000	4818.1738	-0.020000	34.0000	167.5000	34.0000	167.5000
LONGITUDINAL LINE: SOUTH EDGE DECK								
END OF WW	140+34.5000	35.2500	4820.1067	-0.020000	35.2500	-22.0000	35.2500	-22.0000
BF ABUT 1	140+56.5000	35.2500	4819.9199	-0.020000	35.2500	0.0000	35.2500	0.0000
CL ABUT 1	140+57.7500	35.2500	4819.9089	-0.020000	35.2500	1.2500	35.2500	1.2500
FF ABUT 1	140+59.0000	35.2500	4819.8983	-0.020000	35.2500	2.5000	35.2500	2.5000
F-1	140+66.0000	35.2500	4819.8388	-0.020000	35.2500	9.5000		9.5000
F-2	140+74.2500	35.2500	4819.7688	-0.020000	35.2500	17.7500		17.7500
F-3	140+82.5000	35.2500	4819.6985	-0.020000	35.2500	26.0000		26.0000
F-4	140+90.7500	35.2500	4819.6283	-0.020000	35.2500	34.2500		34.2500
F-5	140+99.0000	35.2500	4819.5566	-0.020000	35.2500	42.5000		42.5000
F-6	150+07.2500	35.2500	4819.4823	-0.020000	35.2500	50.7500		50.7500
F-7	150+15.5000	35.2500	4819.4053	-0.020000	35.2500	59.0000		59.0000
F-8	150+23.7500	35.2500	4819.3257	-0.020000	35.2500	67.2500		67.2500
F-9	150+32.0000	35.2500	4819.2436	-0.020000	35.2500	75.5000		75.5000
F-10	150+40.2500	35.2500	4819.1587	-0.020000	35.2500	83.7500		83.7500
F-11	150+48.5000	35.2500	4819.0712	-0.020000	35.2500	92.0000		92.0000
F-12	150+56.7500	35.2500	4818.9811	-0.020000	35.2500	100.2500		100.2500
F-13	150+65.0000	35.2500	4818.8884	-0.020000	35.2500	108.5000		108.5000
F-14	150+73.2500	35.2500	4818.7931	-0.020000	35.2500	116.7500		116.7500
F-15	150+81.5000	35.2500	4818.6951	-0.020000	35.2500	125.0000		125.0000
F-16	150+89.7500	35.2500	4818.5946	-0.020000	35.2500	133.2500		133.2500
F-17	150+98.0000	35.2500	4818.4914	-0.020000	35.2500	141.5000		141.5000
F-18	151+06.2500	35.2500	4818.3855	-0.020000	35.2500	149.7500		149.7500
F-19	151+14.5000	35.2500	4818.2771	-0.020000	35.2500	158.0000		158.0000
FF ABUT 2	151+21.5000	35.2500	4818.1830	-0.020000	35.2500	165.0000	35.2500	165.0000
CL ABUT 2	151+22.7500	35.2500	4818.1560	-0.020000	35.2500	166.2500	35.2500	166.2500
BF ABUT 2	151+24.0000	35.2500	4818.1389	-0.020000	35.2500	167.5000	35.2500	167.5000
END WW	151+46.0000	35.2500	4817.8388	-0.020000	35.2500	189.5000	35.2500	189.5000

AS CONSTRUCTED
NO REVISIONS ☐ REVISED ☐ VOID ☐

FEDERAL ROAD REGION NO.	DIVISION	PROJECT NUMBER	SHEET NO.
VIII	COLORADO	STA 0471-020	46

REVISIONS

NOTE: ELEVATIONS ARE AT TOP OF CONCRETE DECK 0.1667' BELOW FINISHED GRADE.

BRW INC. 225 LAWRENCE ST. SUITE 301 DENVER CO 80202
PLANNING TRANSPORTATION ENGINEERING URBAN DESIGN

DEPARTMENT OF TRANSPORTATION
S.H. 47 OVER TROY AVENUE
PUEBLO, COLORADO

BRIDGE DECK ELEVATIONS

Designer G. Tsiouvaras	Structure Numbers	K-18-GA	
Detailer K. Erickson			
Drawing Number B 26 of 31 Drawings			

Revision Dates (Preliminary Stage Only)

DESIGNED BY / CHECKED BY / DETAILED BY / CHECKED BY — INITIAL / DATE
QUANTITIES BY / CHECKED BY — INITIAL / DATE
VIEW NAME: PV

AS CONSTRUCTED		
NO REVISIONS	REVISED	VOID

FEDERAL ROAD REGION NO.	DIVISION	PROJECT NUMBER	SHEET NO.
VIII	COLORADO	STA 0471-020	47

REVISIONS		

BRIDGE STANDARD I

ROADWAY APPROACHES

ELEVATIONS ARE AT FINISHED GRADE

ELEVATIONS ON ROADWAY APPROACHES (AT FINISHED GRADE)

STATION	OFFSETS				
	-4.0000	0.0000	12.0000	24.0000	34.0000
148+00.0	4822.20	4822.12	4821.88	4821.64	4821.44
+10.0	22.12	22.04	21.80	21.56	21.36
+20.0	22.03	21.95	21.71	21.47	21.27
+30.0	21.95	21.87	21.63	21.39	21.19
148+40.0	4821.86	4821.78	4821.54	4821.30	4821.10
+50.0	21.78	21.70	21.46	21.22	21.02
+60.0	21.69	21.61	21.37	21.13	20.93
+70.0	21.61	21.53	21.29	21.05	20.85
148+80.0	4821.52	4821.44	4821.20	4820.96	4820.76
+90.0	21.44	21.36	21.12	20.88	20.68
149+00.0	21.35	21.27	21.03	20.79	20.59
+10.0	21.27	21.19	20.95	20.71	20.51
149+20.0	4821.18	4821.10	4820.86	4820.62	4820.42
+30.0	21.10	21.02	20.78	20.54	20.34
+40.0	21.01	20.93	20.69	20.45	20.25
+50.0	20.93	20.85	20.61	20.37	20.17

ELEVATIONS ON ROADWAY APPROACHES (AT FINISHED GRADE)

STATION	OFFSETS				
	-4.0000	0.0000	12.0000	24.0000	34.0000
151+30.0	4819.02	4818.94	4818.70	4818.46	4818.26
+40.0	18.88	18.80	18.56	18.32	18.12
+50.0	18.73	18.65	18.41	18.17	17.97
+60.0	18.58	18.50	18.26	18.02	17.82
151+70.0	4818.43	4818.35	4818.11	4817.87	4817.67
+80.0	18.27	18.19	17.95	17.71	17.51
+90.0	18.11	18.03	17.79	17.55	17.35
152+00.0	17.95	17.87	17.63	17.39	17.19
152+10.0	4817.78	4817.70	4817.46	4817.22	4817.02
+20.0	17.61	17.53	17.29	17.05	16.85
+30.0	17.43	17.35	17.11	16.87	16.67
+40.0	17.26	17.18	16.94	16.70	16.50
152+50.0	4817.07	4816.99	4816.75	4816.51	4816.31
+60.0	16.88	16.80	16.56	16.32	16.12
+70.0	16.69	16.61	16.37	16.13	15.93
+80.0	16.50	16.42	16.18	15.94	15.74

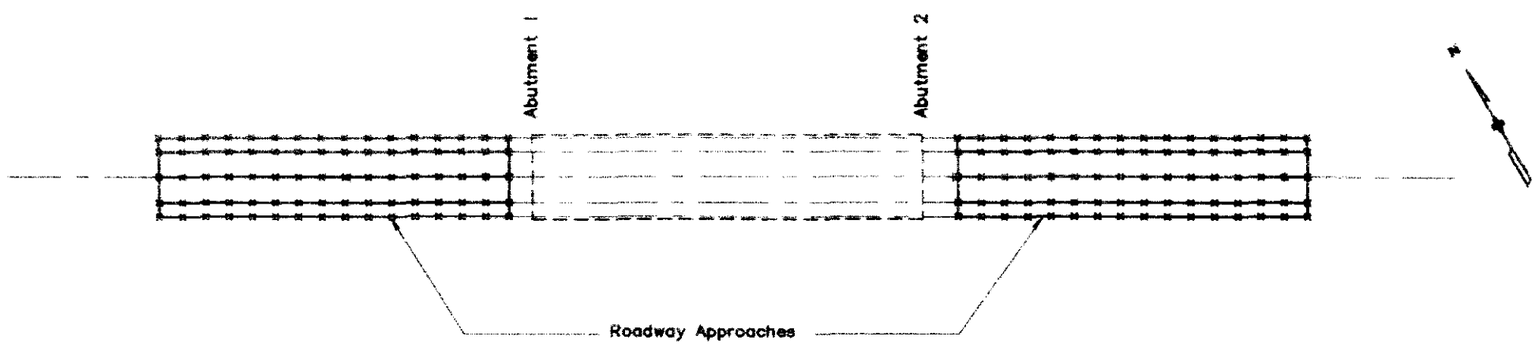

TANGENT ALIGNMENT

PLANNING
TRANSPORTATION
ENGINEERING
URBAN DESIGN

BRW INC. 1225 LAWRENCE ST., SUITE 300, DENVER, CO 80202

DEPARTMENT OF TRANSPORTATION

S.H. 47 OVER TROY AVENUE
PUEBLO, COLORADO

ROADWAY APPROACHES

Designer	G. Tsiouvaras	Structure Numbers	K-18-GA
Detailer	T. Rick		
Drawing Number B 27		of 31	Drawings

Revision Dates (Preliminary Stage Only)

INITIAL	DATE	
DESIGNED BY	GW	1/96
CHECKED BY	GW	1/96
DETAILED BY	TJR	1/96
CHECKED BY	TJR	1/96

SCALE: NONE

F117B

VIEW NAME: PW | DRAWING NAME: C:\DATA\1718\CADD\STRUC\TROY\47BBA01 | DATE: 10-24-1995 | TIME: 11:12:24

STATE DEPARTMENT OF HIGHWAYS
DIVISION OF HIGHWAYS
D. O. H. FORM NO. 117
REV. APR. 1986

AS CONSTRUCTED		
NO REVISIONS	REVISED	VOID

FEDERAL ROAD REGION NO.	DIVISION	PROJECT NUMBER	SHEET NO.
VIII	COLORADO	STA 0471-020	48

REVISIONS		

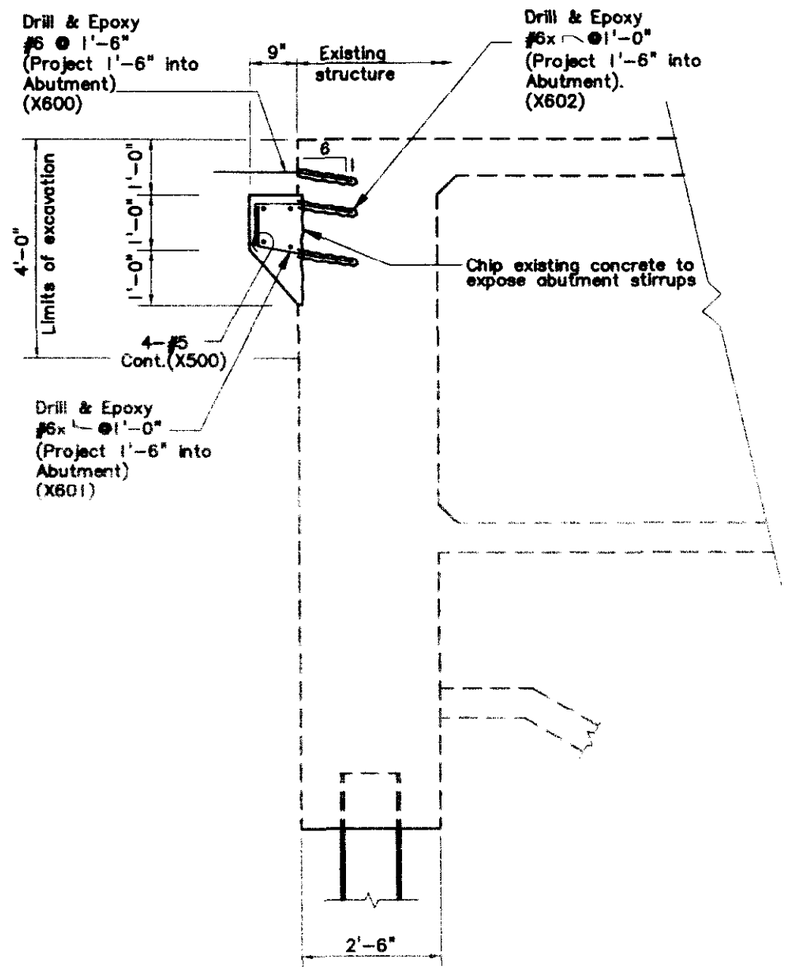

B29 A SECTION

DESIGNED BY	INITIAL	DATE
DESIGNED BY	BKT	9/95
CHECKED BY	BKT	9/95
QUANTITIES BY	VAN	9/95
DETAILED BY		
CHECKED BY		

F 1178
XREFS: NONE

BRW INC. 1225 LAWRENCE ST., SUITE 200, DENVER, CO 80202
PLANNING TRANSPORTATION ENGINEERING URBAN DESIGN

DEPARTMENT OF TRANSPORTATION

S.H.47 OVER TROY AVENUE
PUEBLO, COLORADO

APPROACH SLAB RETROFIT DETAILS

Designer G. Tsiouvaras	Structure Numbers	K-18-EX
Detailer K. Erickson		
Drawing Number B28 of 31 Drawings		

Revision Dates (Preliminary Stage Only)

VIEW NAME: PV | DRAWING NAME: D:\DATA\1718\CADD\STRUCT\TROY\478SUA1 | DATE: 10-31-1995 | TIME: 11:03:37

STATE DEPARTMENT OF HIGHWAYS
DIVISION OF HIGHWAYS
D. O. H. FORM NO. 117
REV. APR. 1986

AS CONSTRUCTED		
NO REVISIONS	REVISED	VOID

FEDERAL ROAD REGION NO.	DIVISION	PROJECT NUMBER	SHEET NO.
VIII	COLORADO	STA 0471-020	49

REVISIONS

B-601-1A

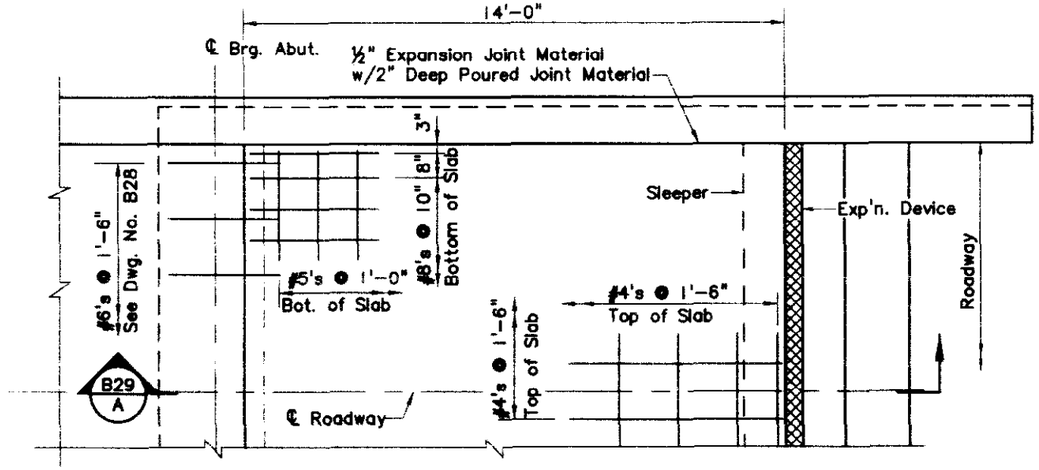

PLAN

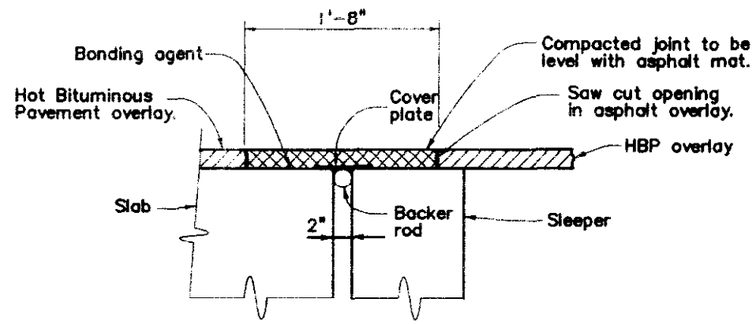

JOINT DETAIL

NOTES

Concrete Class D (Bridge) shall be used for approach slabs.

½" expansion joint material shall meet A.A.S.H.T.O. Spec. M213.

The expansion joint system shall include all labor and materials to install the expansion joint according to the Manufacturer's directions and according to these plans.

The backer rod shall be secured and sealed according to the Manufacturer's directions.

The cover plate shall be the size and type recommended by the Manufacturer and installed in accordance with the Manufacturer's directions.

The joint bonding agent shall be the type recommended by the Manufacturer for the joint system being installed. It shall be applied according to the Manufacturer's recommendations.

All surfaces in joint opeing shall be cleaned according to the Manufacturer's directions.

The joints shall be installed and compacted according to the Manufacturer's procedures.

The finished joint, after compacting, shall be flush with the top of the adjacent asphalt surface.

A representative of the Manufacturer shall be on site prior to installing the expansion joints and shall approve the methods and materials before work commences.

See Special Provisions for Bridge Expansion Device (0"-2")

ACCEPTABLE ALTERNATES

Koch B J S System
Linear Dynamics Thorma-Joint
Watson Bowman Acme Expandex

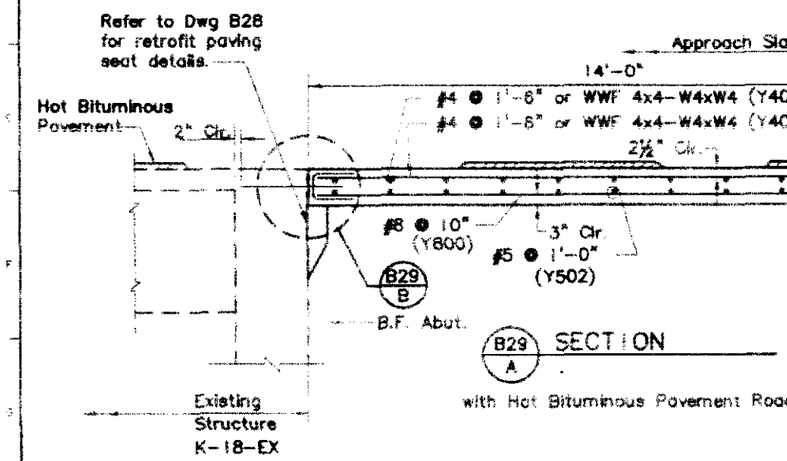

B29 A SECTION
with Hot Bituminous Pavement Roadway

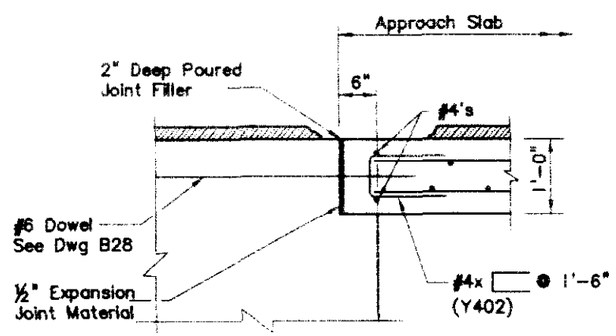

B29 B DETAIL

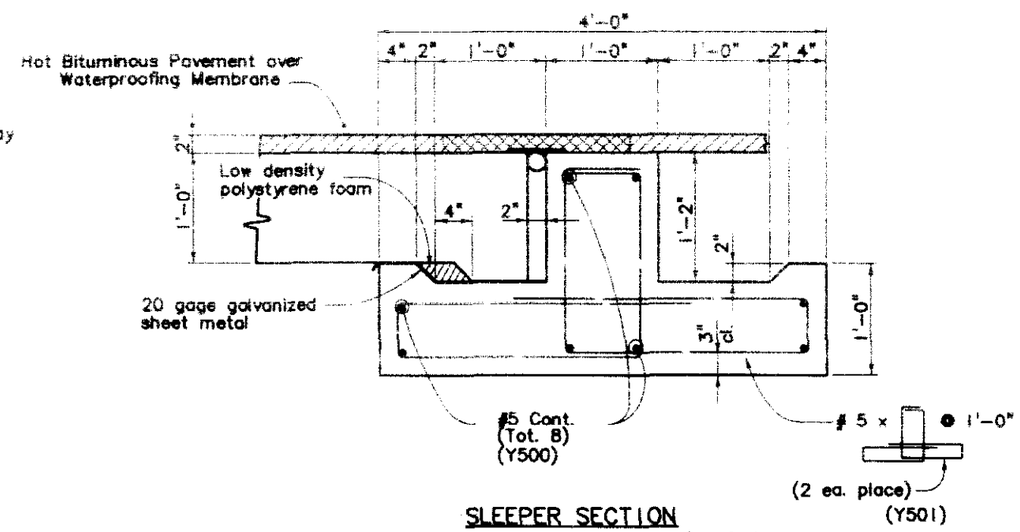

SLEEPER SECTION
Taken normal to expansion device
Sleeper may be precast.

BRW INC. 1225 LAWRENCE ST., SUITE 300, DENVER, CO 80202
PLANNING TRANSPORTATION ENGINEERING URBAN DESIGN

DEPARTMENT OF TRANSPORTATION
S.H.47 OVER TROY AVENUE
PUEBLO, COLORADO

APPROACH SLAB DETAILS

Designer G. Tsiouvaras	Structure Numbers	K-18-EX
Detailer K. Erickson		
Drawing Number B29 of 31		Drawings

Revision Dates (Preliminary Stage Only)

INITIAL	DATE
DESIGNED BY	
CHECKED BY	
QUANTITIES BY	
CHECKED BY	
DETAILED BY	
CHECKED BY	

F117/B
NO SCALE

DIVISION OF HIGHWAYS:
D. O. H. FORM NO. 117.
REV. APR 1986

CONSTRUCTED			
NO REVISIONS	REVISED	VOID	

FEDERAL ROAD REGION NO.	DIVISION	PROJECT NUMBER	SHEET NO.
VIII	COLORADO	STA 0471-020	50

REVISIONS		

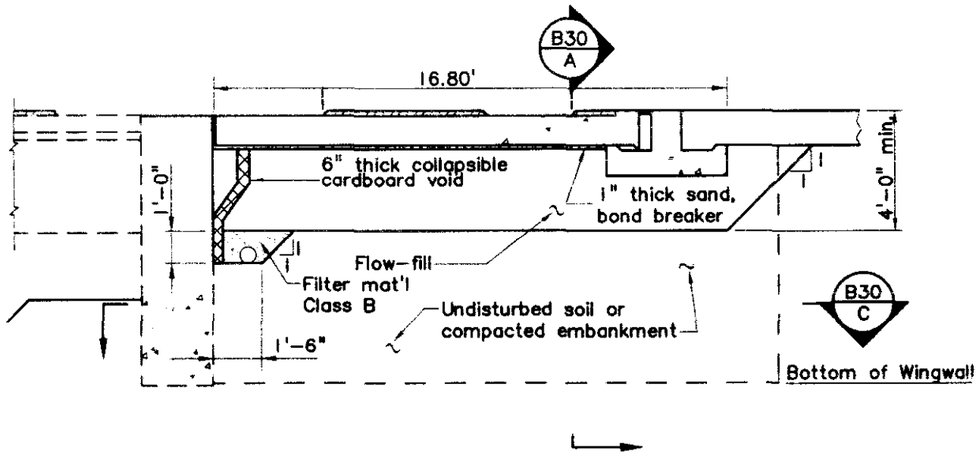

SECTION PERPENDICULAR TO ABUTMENT

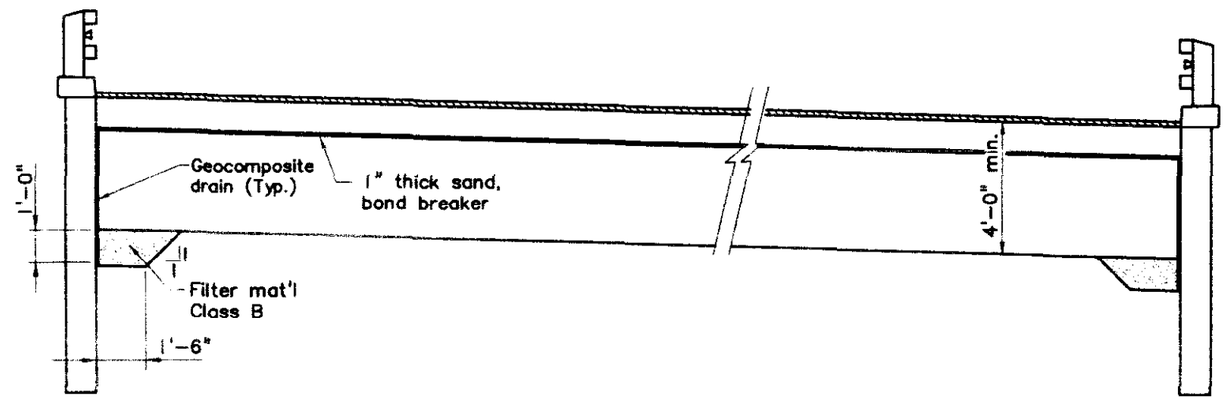

B30 A SECTION

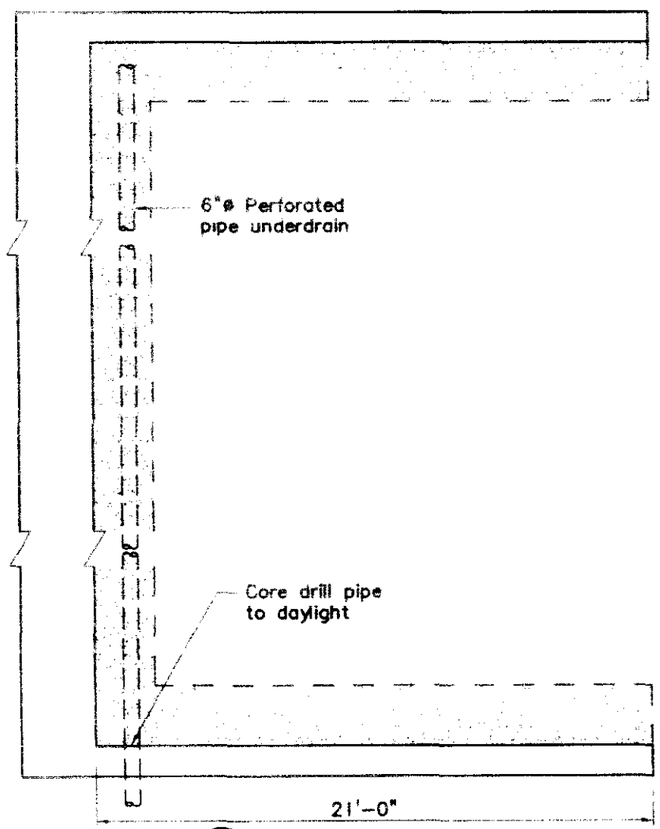

B30 C SECTION

(Symmetrical about ℄)

6" Perforated Pipe Underdrain includes all Filter material and Geotextile. Quantity shown is measured along the Perforated Pipe from inside face to inside face of wingwalls.

For Information Only

Item No.	Description	Units	Location Abut. 1	Location Abut. 2
605	6" Perforated Pipe Underdrain	Lin. Ft.	42	42
605	Geocomposite Drain	Sq. Yd.	18	18
605	Subsurface Drain Outlet	Lin Ft.	5	5

Sand bond breaker, cardboard void, Geocomposite Drain, 6" Perforated Pipe Underdrain, Core drilling and Subsurface Drain outlet (6" nonperforated pipe) will not be measured or paid for separately but shall be included in the work.

Installation of Perforated Pipe Underdrain, Subsurface Drain Outlet, and Geocomposite Drain will conform to the Construction requirement of section 605.03, 605.06 and 605.04, respectively.

INITIAL	DATE	INITIAL	DATE
DESIGNED BY GKT	8/95	CHECKED BY GKT	8/95
CHECKED BY PWE	8/95	QUANTITIES BY GKT	8/95
DETAILED BY KDE	8/95	CHECKED BY TAR	8/95

XREFS: NONE

BRW INC. 1225 LAWRENCE ST., SUITE 200, DENVER, CO 80202
PLANNING TRANSPORTATION ENGINEERING URBAN DESIGN

DEPARTMENT OF TRANSPORTATION
S.H.47 OVER TROY AVENUE
PUEBLO, COLORADO

STRUCTURE BACKFILL
(FLOW-FILL)

Designer G. Tsiouvaras	Structure Numbers	K-18-EX
Detailer K. Erickson		
Drawing Number 30 of 31 Drawings		

Revision Dates (Preliminary Stage Only)

VIEW NAME: PW | DRAWING NAME: C:\DATA\471B\CADD\STRUC\TROY\47BAPA2 | DATE: 1-06-1995 | TIME: 8:35:18

STATE DEPARTMENT OF HIGHWAYS
DIVISION OF HIGHWAYS
D. O. H. FORM NO. 117
REV. APR. 1986

AS CONSTRUCTED		
NO REVISIONS	REVISED	VOID

FEDERAL ROAD REGION NO.	DIVISION	PROJECT NUMBER	SHEET NO.
VIII	COLORADO	STA 0471-020	51

B-606-10

REVISIONS		

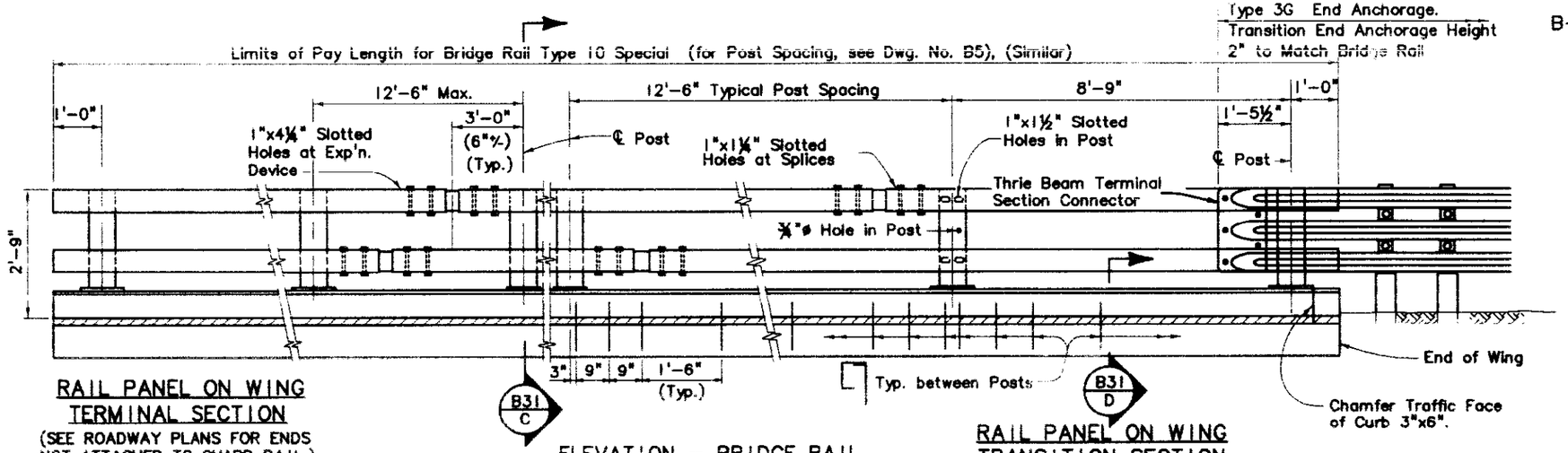

RAIL PANEL ON WING TERMINAL SECTION
(SEE ROADWAY PLANS FOR ENDS NOT ATTACHED TO GUARD RAIL.)

ELEVATION – BRIDGE RAIL
Refer to Dwgs. B18–B20 for details not shown
Existing rolling above deck or wingwall surface shall be removed. Preserve existing parapet vertical reinforcement.

RAIL PANEL ON WING TRANSITION SECTION
(SEE ROADWAY PLANS FOR ENDS REQUIRING ATTACHMENT TO GUARD RAIL)

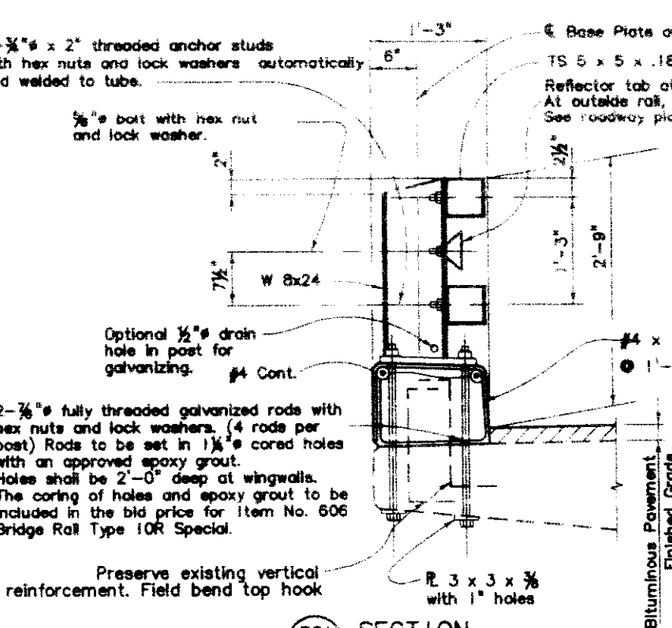

B31 C SECTION

NOTE: Outside rails of Str. Nos. K-18-EX and K-18-GA require an additional bicycle railing. Refer to Dwg. B21 for details.

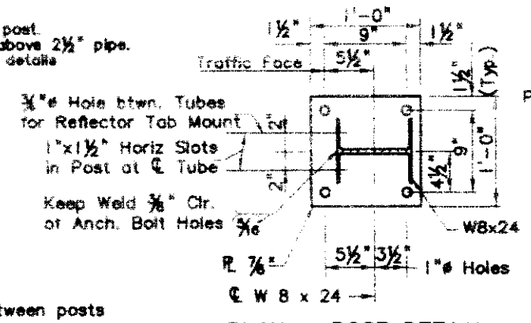

PLAN – POST DETAIL

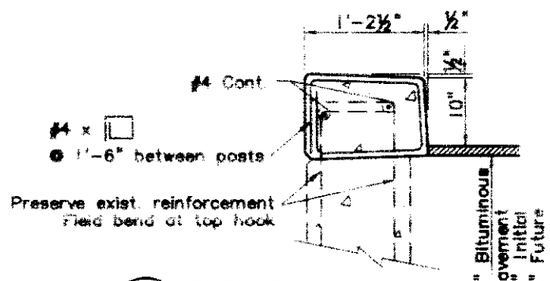

B31 D SECTION

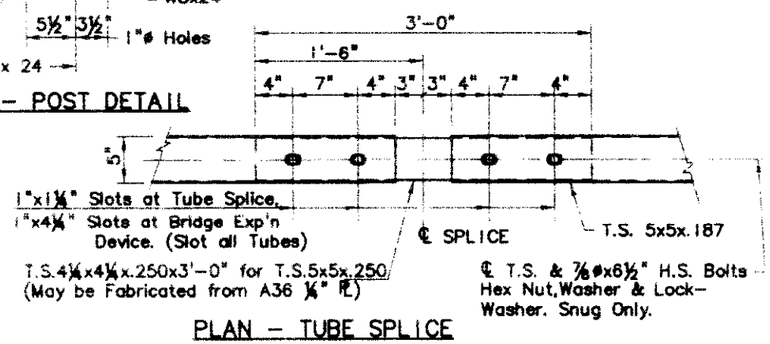

PLAN – TUBE SPLICE
Stagger Top & Bottom Splices into Different Post Spacings, except at Expansion Joint Place at Opposite Ends of Same Post Space. (Range of Motion=1'-0" at Bridge Expansion Device.)

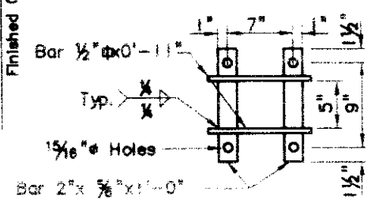

ANCHOR DETAIL
(Applies to wingwall only)

GENERAL NOTES

ALL TUBES SHALL BE FABRICATED FROM ASTM A500 GRADE B. ALL POSTS SHALL BE FABRICATED FROM ASTM A36 STEEL.

THE ABOVE MATERIAL AND ALL ANCHOR BOLTS AND MISCELLANEOUS BOLTS, NUTS, AND WASHERS SHALL BE GALVANIZED AFTER FABRICATION, IN ACCORDANCE WITH SECTION 509.

CONCRETE, REINFORCING STEEL, AND STRUCTURAL STEEL ELEMENTS SHALL CONFORM TO THE REQUIREMENTS OF SECTIONS 601, 602, AND 509; RESPECTIVELY.

POST ANCHOR, ENCASED IN CONCRETE, SHALL BE ASTM A36 OR AASHTO M183 STEEL, AS NOTED, AND NEED NOT BE GALVANIZED.

THE TUBES SHALL BE SHOP BENT OR FABRICATED TO FIT HORIZONTAL CURVE WHEN RADIUS IS LESS THAN 1500 FEET.

TUBES SHALL BE CONTINUOUS OVER NOT LESS THAN TWO POSTS.

THE CENTERLINE OF THE POSTS AT THE BRIDGE EXPANSION DEVICE SHALL BE A MINIMUM OF 3'-0" FROM THE CENTERLINE OF THE BRIDGE EXPANSION DEVICE, MEASURED ALONG THE CENTERLINE OF POSTS.

ALL BOLTS THAT HAVE LOCK WASHERS SHALL BE TIGHTENED TO SNUG ONLY.

POSTS SHALL BE PERPENDICULAR TO THE GRADE OF THE DECK.

ONE OR MORE 12'-6" POST SPACINGS MAY BE REDUCED (8'-4" MIN.) IN ORDER TO MAINTAIN DIMENSIONS FROM THE END OF THE WINGS AND EXPANSION JOINTS.

OPTIONAL DRAIN HOLE FOR GALVANIZING MAY BE DRILLED, PUNCHED OR CLIPPED, LEAVING SMOOTH SURFACES AND TRANSITIONS. NO FLAME CUTTING OR AIR CARBON ARC GOUGING IS ALLOWED.

POSTS, POST ANCHORS, BASE PLATES, BACKING PLATES, ANCHOR BOLTS, MISCELLANEOUS BOLTS, NUTS, WASHERS, TUBES, TUBE EXPANSION DEVICES, TUBE SPLICES, END PLATES, CURB CONCRETE (CLASS D), CURB REINFORCING STEEL, AND REFLECTOR TABS SHALL BE INCLUDED IN ITEM 606, BRIDGE RAIL TYPE 10R SPECIAL.

PRIOR TO FABRICATION OF THIS ITEM, TWO SETS OF SHOP DRAWINGS WHICH COMPLY WITH THE REQUIREMENTS OF SECTION 105, SHALL BE SUBMITTED TO THE DIVISION FOR INFORMATION ONLY. ONE SET SHALL BE SENT TO THE COLORADO DIVISION OF HIGHWAYS, STAFF MATERIALS BRANCH, MATERIALS INSPECTION UNIT, 4340 E. LOUISIANA AVENUE, DENVER, COLORADO 80222, AND ONE SET SHALL BE SENT TO THE ENGINEER. THE SHOP DRAWINGS WILL NOT BE APPROVED OR RETURNED.

STRUCTURAL STEEL:
AASHTO M183 (ASTM A36) f_y = 36,000 psi
COLD FORMED ASTM A500 GRADE B f_y = 46,000 psi

INFORMATION ONLY

DESCRIPTION	UNIT	PER LIN. FT.
STRUCTURAL STEEL (GALVANIZED)	LB.	33.1
CONCRETE CLASS D (BRIDGE)	CU.YD.	0.04
REINFORCING STEEL (EPOXY COATED)	LB.	4.0

DEPARTMENT OF TRANSPORTATION
S.H.47 OVER TROY AVENUE
PUEBLO, COLORADO

BRIDGE RAIL REMOVAL AND RETROFIT DETAILS

Designer G. Tsiouvaras	Structure Numbers	K-18-EX
Detailer K. Erickson		
Drawing Number B31 of 31 Drawings		

BRW INC. 1225 LAWRENCE ST., SUITE 350, DENVER, CO 80202
PLANNING TRANSPORTATION ENGINEERING URBAN DESIGN

INITIAL	DATE
DESIGNED BY GMT	5/96
CHECKED BY GMT	5/96
QUANTITIES BY PMK	5/96
CHECKED BY TJK	5/96
DESIGNED BY GMT	5/96
CHECKED BY PMK	5/96
DETAILED BY KDE	5/96

Revision Dates (Preliminary Stage Only)

VIEW NAME: PW DRAWING NAME: C:\DATA\1718\CADD\STRUCT\TROY\47BBR04 DATE 10-24-1995 TIME 11:18:32

BEGIN PROJECT NO. STA 0471-020
STA. 70+50
BEGIN WIDENING / BEGIN OVERLAY =
STA. 70+50.00 PROJ. NO. FFU 047-1(6) =
M.P. 0.91

UTILITIES

U.S. WEST
WEST PLAINS ELECTRIC
PUEBLO BOARD OF WATER WORKS
CITY OF PUEBLO SANITARY SEWER
TCI CABLE VISION OF COLORADO
PUBLIC SERVICE COMPANY

LEGEND

△ SURVEY MONUMENT

I-25

JERRY MURPHY ROAD

580' OVERLAY

270' OVERLAY

RAMP D

RAMP B

SH 47 (EXISTING)

N 83°45'32" E
905.64'

STA. 73+79.59, 35' RT. (PROJ. C.L.) =
STA. 305+78.78, 20' LT. (RAMP B)
R.P. R = 1.0'

STA. 76+15.39 REQ'D. REMOVE 175 LF EXIST. 24"CSP. INSTALL 180 LF 48"MIN 36" RCP WITH CONC. HEADWALL, LT. & CONCRETE DIVERSION STRUCTURE, RT.

D.A. = 18.1 AC. (PLUS UPSTREAM)
Q_{100} = 90.3 CFS (0 CFS FLOWBY)
D.H.W. = 4790.55'
A.H.W. = 4790.55'
HW/D_{100} = 1.3
S = 0.0120 '/FT.
SKEW ∡ = 75°41'RT.
L = 184 LF
(122.06'LT & 57.94'RT)

SURVEY LINE

PROJECT C.L.

MATCH LINE STA. 80+00

STA. 77+10.14, 36' RT (PROJ. C.L.) =
PT STA. 310+07.36 END RAMP B
BEGIN ACCELERATION LANE

590' ACCELERATION LANE

STA. 71+46.41 REQ'D. REMOVE 313 LF EXIST. 24" CSP AND INLET. INSTALL 303 LF OF 36" RCP WITH END SECTION, TYPE D INLET 18' LT. & CONC. HEADWALL, LT.

D.A. = 9.4 AC.(PLUS UPSTREAM)
Q_{100} = 30.2 CFS
D.H.W. = 4778.1'
A.H.W. = 4778.1'
HW/D_{100} = 1.3
S = 0.0080 & 0.005'/F
SKEW ∡ = 89°39', RT.
L = 303 LF
(173' LT & 130' RT)

SEC 18 T20S R64W

ORIGINAL SCALE 1"=50'

SOIL SURVEY
REFER TO "GEOTECHNICAL ENGINEERING STUDY, STATE HIGHWAY 47, JERRY MURPHY EAST"
BY GOODSON & ASSOC., INC.
APRIL 7, 1995

STA. 70+50.00 BEGIN PROFILE
ELEV. 4776.70

+2.85%

PROFILE GRADE

36" RCP INV. = 4773.44

T.H. NO. R-1
STA. 68+00, 50.0' LT.
ASPHALT PAVEMENT OVERLYING BASE COURSE AND SUBBASE OVER SLIGHTLY SANDY CLAYSTONE.
CLAYSTONE DATA:
A-7-6(16)
LL = 43%
PI = 16%

PVC STA 74+50
PVC ELEV 4788.10

TWIN 36" RCP INV = 4786.01

PVI STA = 76+50
PVI ELEV = 4793.80

APPROXIMATE EXISTING GROUND @ PROJECT C.L.

400' VC
K = 1428
SSD > 650 FT.
MDS = 60 MPH

PVT STA. 78+50
PVT ELEV. 4798.94

T.H. NO. R-2
STA 78+00, 20.0' RT.
SANDY CLAYSTONE
CLAYSTONE DATA:
A-7-6(10)
LL = 36%
PI = 17% R = 20

+2.57%

MATCH LINE STA. 80+00

4800 4790 4780 4770

4776.70/4776.70 4778.11/4778.13 4779.41/4779.55 4780.78/4780.98 4782.12/4782.40 4783.45/4783.83 4784.59/4785.25 4785.98/4786.68 4788.24/4788.10 4789.48/4789.52 4790.65/4790.92 4791.54/4792.30 4792.98/4793.66 4792.99/4795.01 4794.00/4796.34 4795.32/4797.65 4796.55/4798.94 4797.78/4800.23 4799.00/4801.51 4800.27

67+00 68+00 69+00 70+00 71+00 72+00 73+00 74+00 75+00 76+00 77+00 78+00 79+00 80+00

DESIGNED BY
CHECKED BY
DETAILED BY
INITIAL DATE
CHECKED BY
QUANTITIES BY
CHECKED BY

Xref'd Drawings

INITIAL	DATE	CHECKED BY
		QUANTITIES BY
		CHECKED BY

DESIGNED BY
CHECKED BY
DETAILED BY

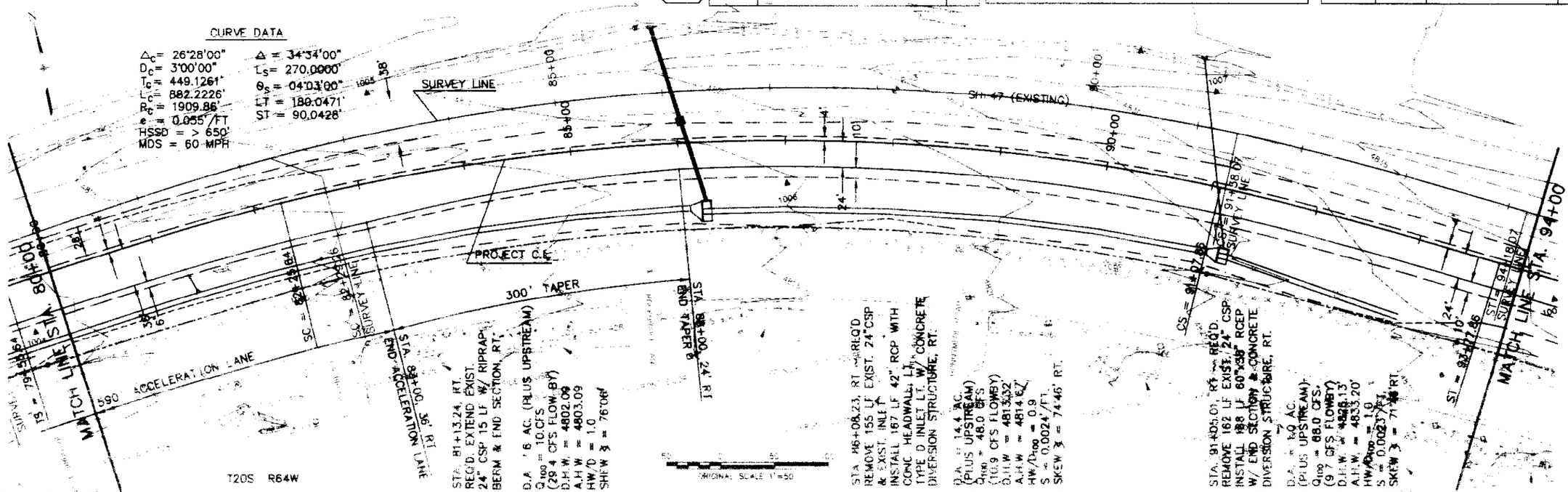

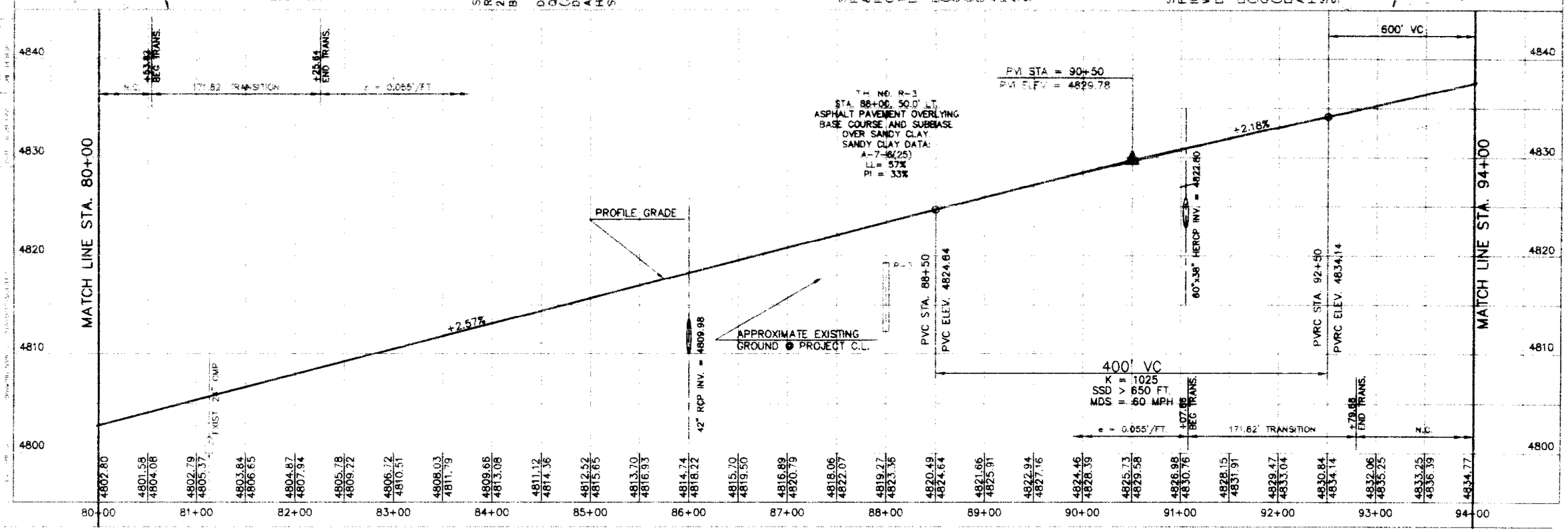

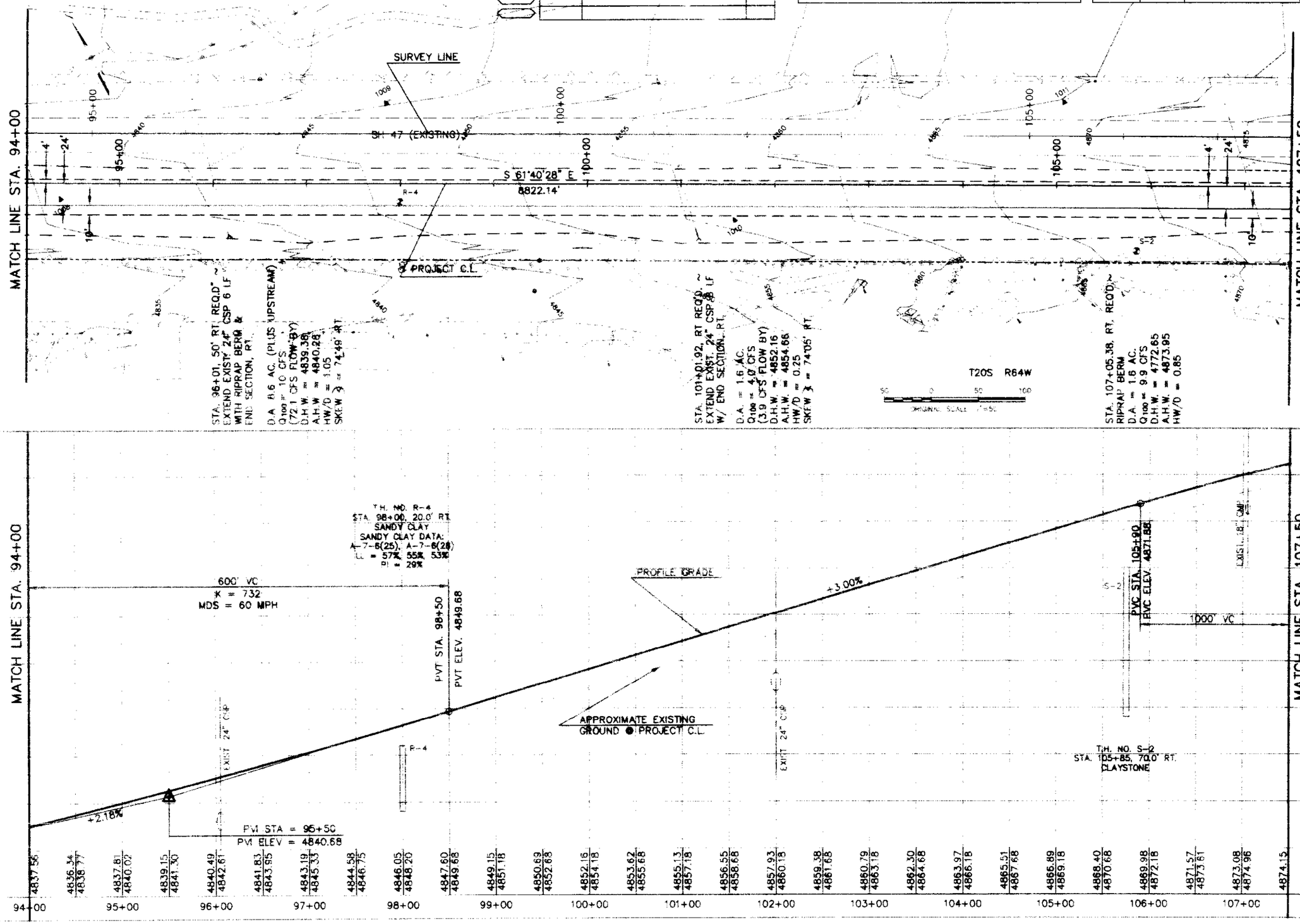
MATCH LINE STA. 94+00
MATCH LINE STA. 107+50
SURVEY LINE
SH 47 (EXISTING)
S 61°40'28" E
8822.14'
PROJECT C.L.
STA. 96+01, 50' RT. REQ'D. ~
EXTEND EXIST. 24" CSP 6 LF
WITH RIPRAP BERM &
END SECTION, RT.
D.A. 8.6 AC. (PLUS UPSTREAM)
Q100 = 10 CFS
(72.1 CFS FLOW BY)
D.H.W. = 4839.38
A.H.W. = 4840.28
HW/D = 1.05
SKEW ∡ = 74°49' RT.
STA. 101+01.92, RT REQ'D. ~
EXTEND EXIST. 24" CSP 8 LF
W/ END SECTION, RT.
D.A. = 1.6 AC.
Q100 = 4.0 CFS
(3.9 CFS FLOW BY)
D.H.W. = 4852.16
A.H.W. = 4854.66
HW/D = 0.25
SKEW ∡ = 74°05' RT.
T20S R64W
STA. 107+05.38, RT. REQ'D. ~
RIPRAP BERM
D.A. = 1.6 AC.
Q100 = 9.9 CFS
D.H.W. = 4772.65
A.H.W. = 4873.95
HW/D = 0.85
T.H. NO. R-4
STA. 98+00, 20.0' RT.
SANDY CLAY
SANDY CLAY DATA:
A-7-6(25), A-7-6(28)
LL = 57%, 55%, 53%
PI = 29%
600' VC
K = 732
MDS = 60 MPH
PVT STA. 98+50
PVT ELEV. 4849.68
PROFILE GRADE
+3.00%
+2.18%
APPROXIMATE EXISTING
GROUND @ PROJECT C.L.
EXIST. 24" CMP
PVI STA = 95+50
PVI ELEV = 4840.68
PVC STA. 105+90
PVC ELEV. 4871.88
1000' VC
T.H. NO. S-2
STA. 105+85, 70.0' RT.
CLAYSTONE
4837.56
4836.34 4838.77
4837.81 4840.02
4839.15 4841.30
4840.49 4842.61
4841.83 4843.95
4843.19 4845.33
4844.58 4846.75
4846.05 4848.20
4847.60 4849.68
4849.15 4851.18
4850.69 4852.83
4852.16 4854.18
4853.62 4855.68
4855.13 4857.18
4856.55 4858.68
4857.93 4860.18
4859.38 4861.68
4860.79 4863.18
4862.30 4864.68
4863.97 4866.18
4865.51 4867.68
4866.89 4869.18
4868.40 4870.68
4869.98 4872.18
4871.57 4873.81
4873.08 4874.96
4874.15
94+00
95+00
96+00
97+00
98+00
99+00
100+00
101+00
102+00
103+00
104+00
105+00
106+00
107+00
4870
4860
4850
4840

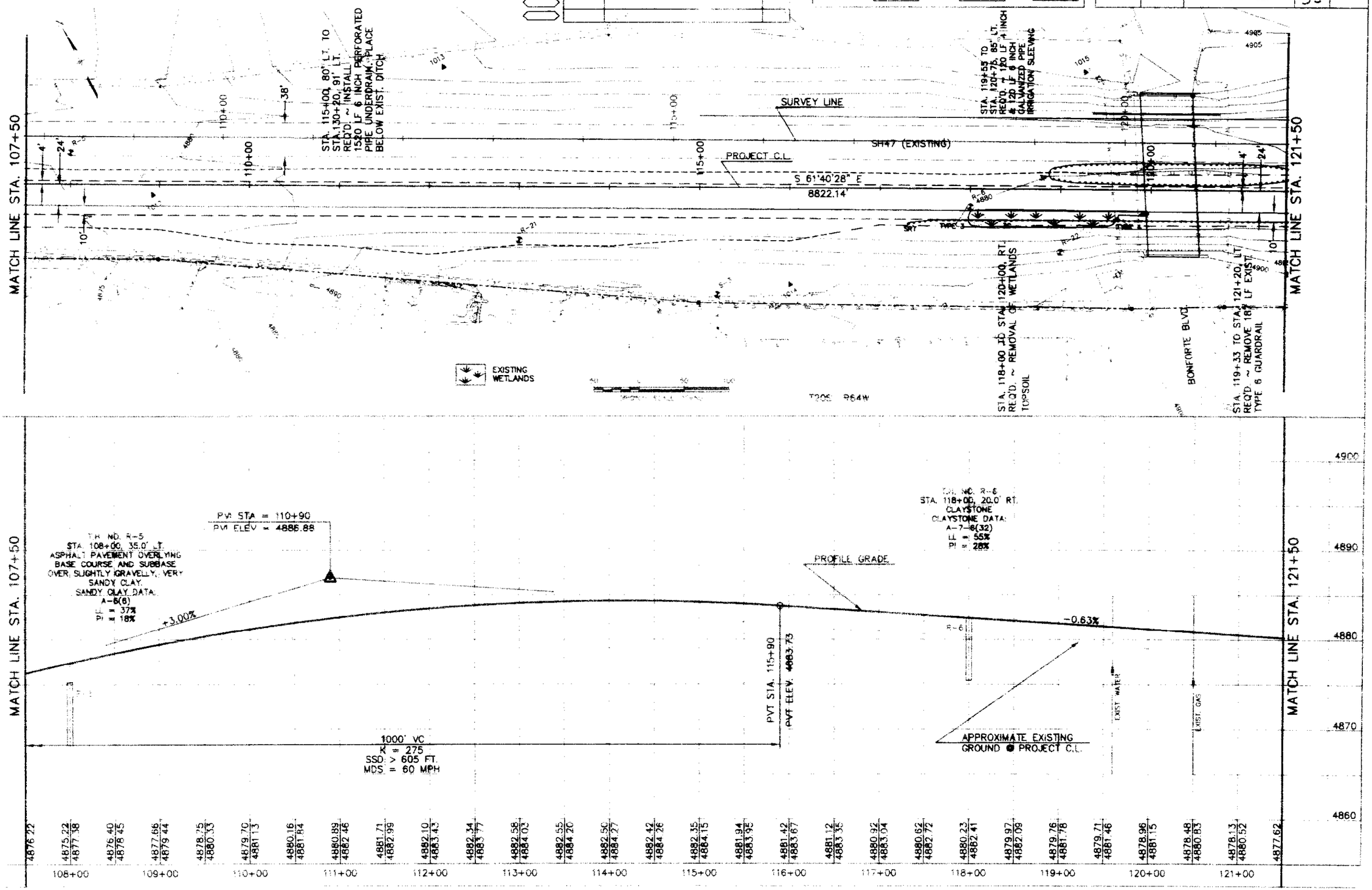
MATCH LINE STA. 107+50
MATCH LINE STA. 121+50
STA. 115+00, 80' LT. TO STA. 130+20, 91' LT. REQ'D. ~ INSTALL 1520 LF 6 INCH PERFORATED PIPE UNDERDRAIN. PLACE BELOW EXIST. DITCH
SURVEY LINE
PROJECT C.L.
SH47 (EXISTING)
S 61°40'28" E
8822.14'
STA. 119+55 TO STA. 120+75, 85' LT. REQ'D. ~ 120 LF 4 INCH & 120 LF 6 INCH GALVANIZED PIPE IRRIGATION SLEEVING
STA. 118+00 TO STA. 120+00, RT. REQ'D. ~ REMOVAL OF WETLANDS TOPSOIL
BONFORTE BLVD.
STA. 119+33 TO STA. 121+20, LT. REQ'D. ~ REMOVE 187 LF EXIST. TYPE 6 GUARDRAIL
EXISTING WETLANDS
T20S R64W
PVI STA = 110+90
PVI ELEV = 4886.88
T.H. NO. R-5
STA. 108+00, 35.0' LT.
ASPHALT PAVEMENT OVERLYING BASE COURSE AND SUBBASE OVER SLIGHTLY GRAVELLY, VERY SANDY CLAY.
SANDY CLAY DATA:
A-6(8)
LL = 37%
PI = 18%
+3.00%
PROFILE GRADE
-0.63%
PVT STA. 115+90
PVT ELEV. 4883.73
T.H. NO. R-6
STA. 118+00, 20.0' RT.
CLAYSTONE
CLAYSTONE DATA:
A-7-6(32)
LL = 55%
PI = 28%
1000' VC
K = 275
SSD: > 605 FT.
MDS = 60 MPH
APPROXIMATE EXISTING GROUND @ PROJECT C.L.
EXIST. WATER
EXIST. GAS
4900
4890
4880
4870
4860
108+00
109+00
110+00
111+00
112+00
113+00
114+00
115+00
116+00
117+00
118+00
119+00
120+00
121+00

Xref'd Drawings

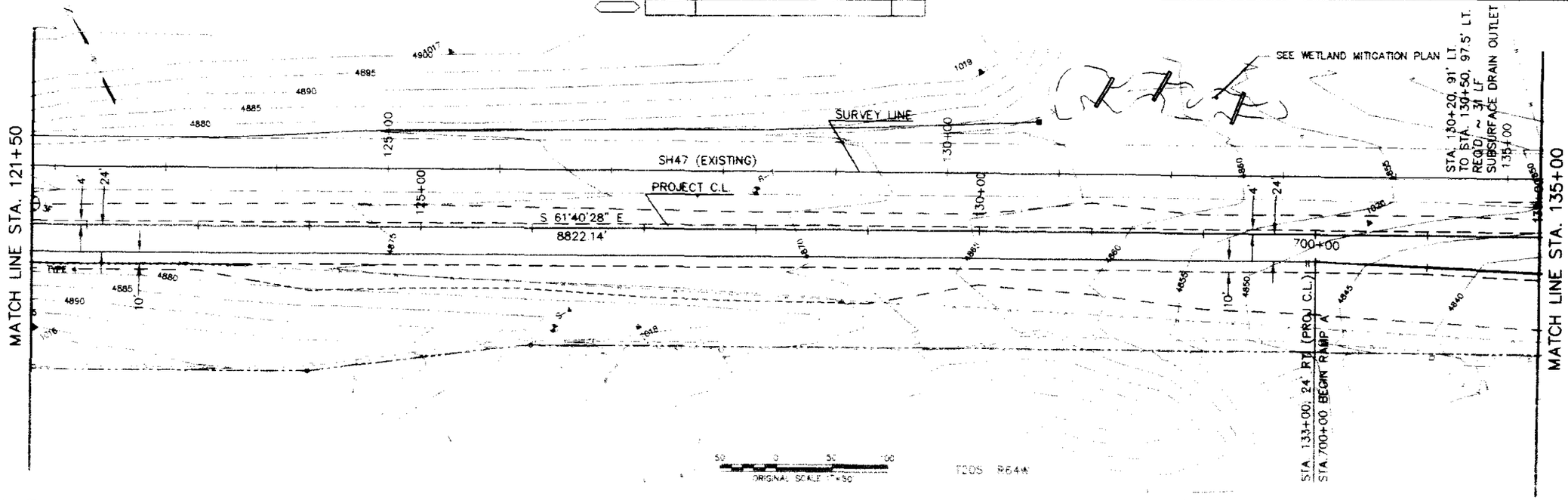

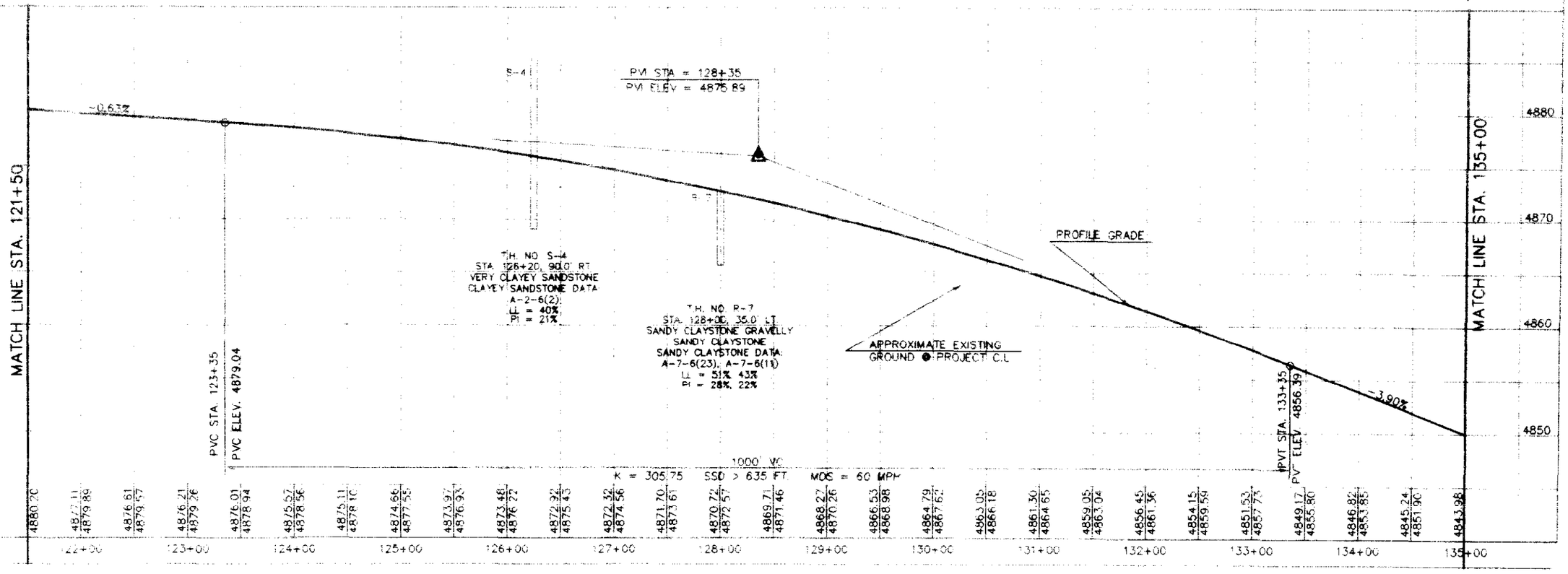

Xref'd Drawings

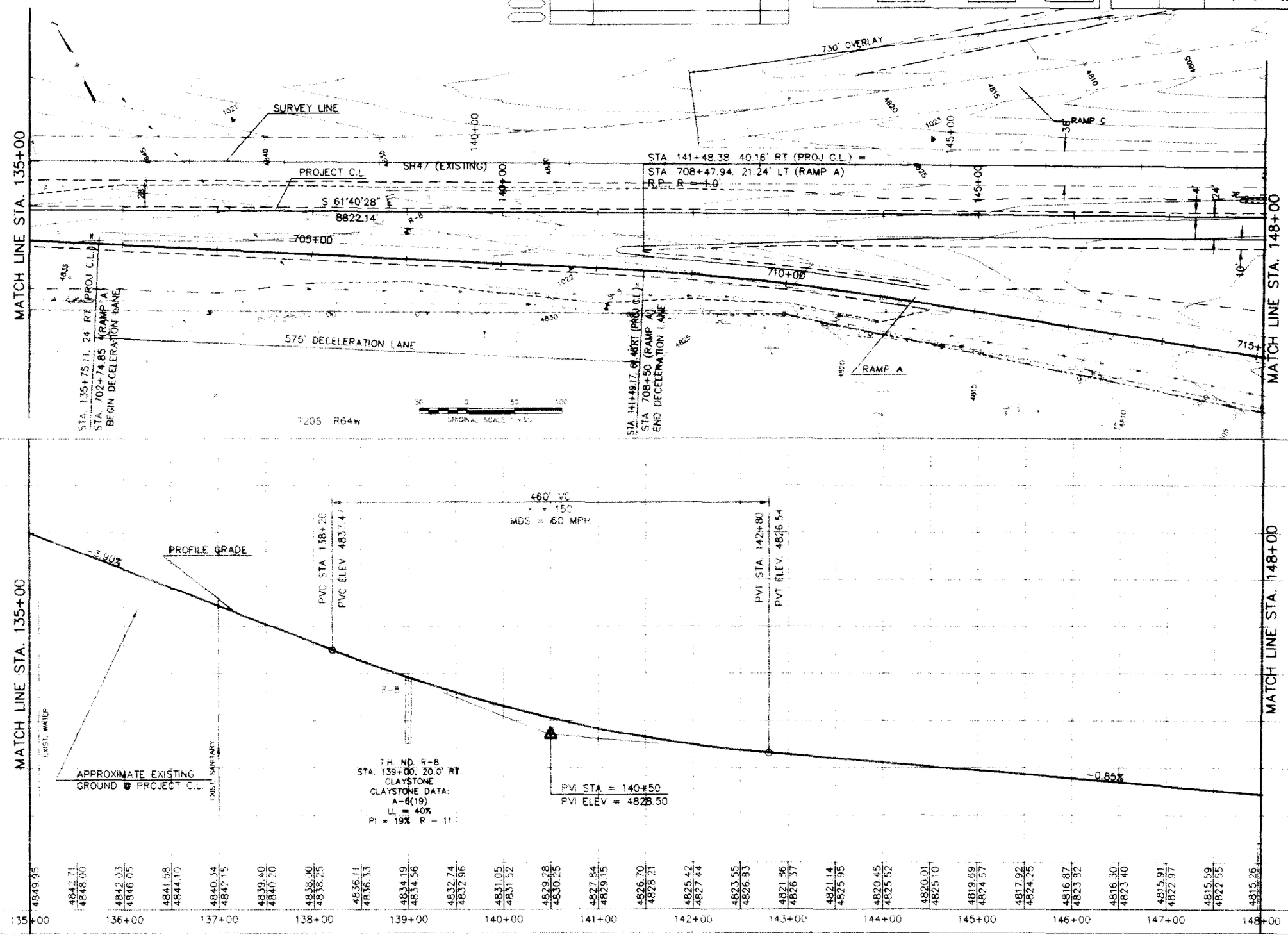

INITIAL	DATE	
		DESIGNED BY
		CHECKED BY
		DETAILED BY
		QUANTITIES BY
		CHECKED BY

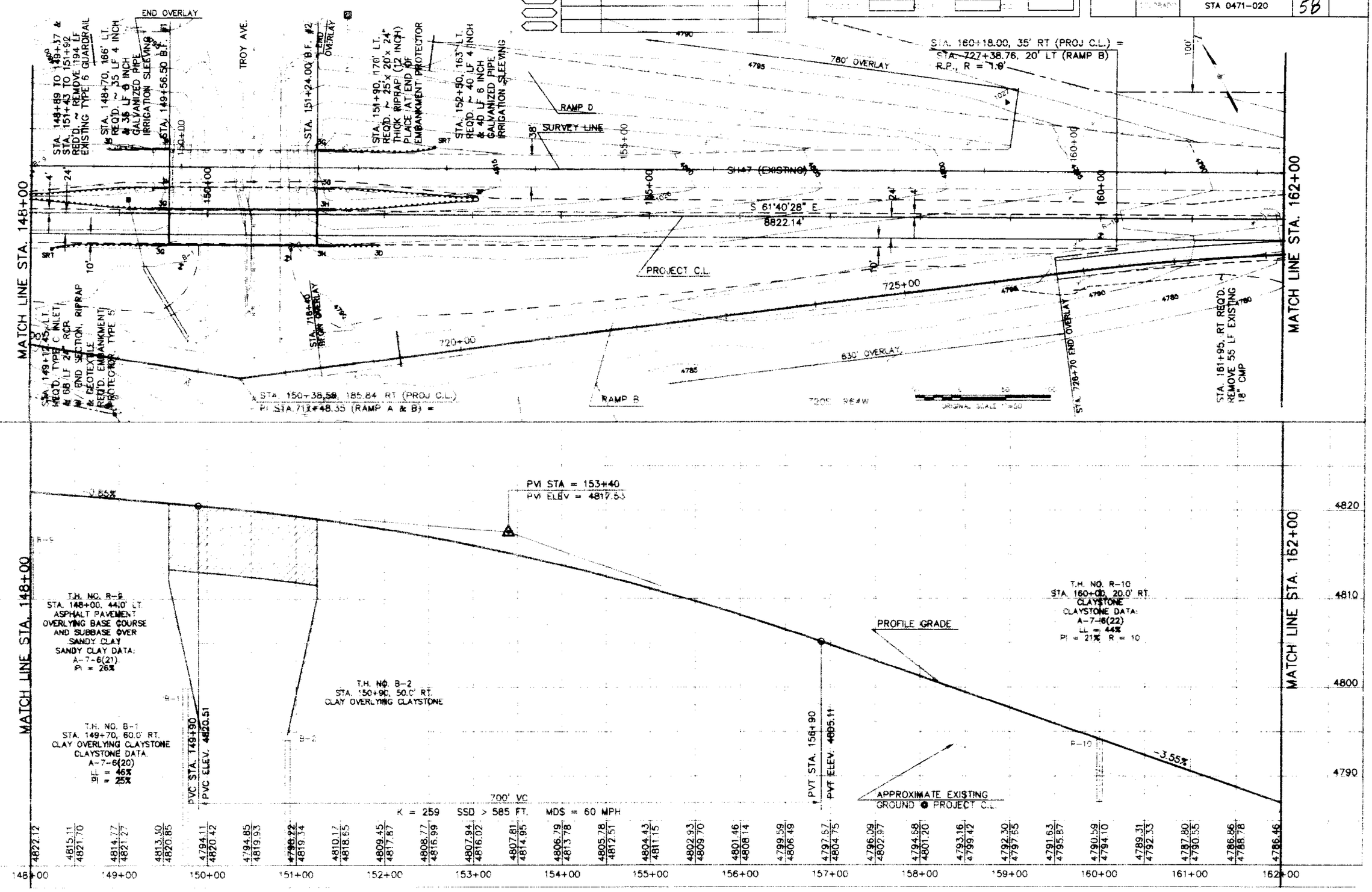
MATCH LINE STA. 148+00
MATCH LINE STA. 162+00
END OVERLAY
TROY AVE.
STA. 143+89 TO 149+37 & STA. 151+43 TO 151+92 REQ'D. ~ REMOVE 194 LF EXISTING TYPE 6 GUARDRAIL
STA. 148+70, 166' LT. REQ'D. ~ 35 LF 4 INCH & 36 LF 6 INCH GALVANIZED PIPE IRRIGATION SLEEVING
STA. 149+56.50 B.F. #1
STA. 151+24.00 B.F. #2
STA. 151+90, 170' LT. REQ'D. ~ 25' x 20' x 24" THICK RIPRAP (12 INCH) PLACE AT END OF EMBANKMENT PROTECTOR
STA. 152+50, 163' LT. REQ'D. ~ 40 LF 4 INCH & 40 LF 6 INCH GALVANIZED PIPE IRRIGATION SLEEVING
RAMP D
SURVEY LINE
780' OVERLAY
STA. 160+18.00, 35' RT (PROJ C.L.) = STA. 727+38.76, 20' LT (RAMP B)
R.P., R = 1.9'
SH47 (EXISTING)
S 61°40'28" E
8822.14'
PROJECT C.L.
725+00
720+00
830' OVERLAY
STA. 149+12.45, 6' LT. REQ'D. TYPE C INLET & 68 LF 24" RCP W/ END SECTION, RIPRAP & GEOTEXTILE REQ'D. EMBANKMENT PROTECTOR, TYPE 5
STA. 718+40 BEGIN OVERLAY
STA. 150+38.58, 185.84' RT (PROJ C.L.) = PI STA. 712+48.35 (RAMP A & B)
RAMP B
STA. 728+70 END OVERLAY
STA. 161+95, RT REQ'D. REMOVE 55 LF EXISTING 18" CMP
ORIGINAL SCALE 1"=50'
PVI STA = 153+40
PVI ELEV = 4817.53
-0.55%
-3.55%
T.H. NO. R-9
STA. 148+00, 44.0' LT.
ASPHALT PAVEMENT OVERLYING BASE COURSE AND SUBBASE OVER SANDY CLAY
SANDY CLAY DATA:
A-7-6(21)
PI = 26%
T.H. NO. B-1
STA. 149+70, 60.0' RT.
CLAY OVERLYING CLAYSTONE
CLAYSTONE DATA.
A-7-6(20)
LL = 46%
PI = 25%
T.H. NO. B-2
STA. 150+90, 50.0' RT.
CLAY OVERLYING CLAYSTONE
T.H. NO. R-10
STA. 160+00, 20.0' RT.
CLAYSTONE
CLAYSTONE DATA:
A-7-6(22)
LL = 44%
PI = 21% R = 10
PROFILE GRADE
PVC STA. 149+90
PVC ELEV. 4820.51
PVT STA. 156+90
PVT ELEV. 4805.11
700' VC
K = 259 SSD > 585 FT. MDS = 60 MPH
APPROXIMATE EXISTING GROUND @ PROJECT C.L.
4820
4810
4800
4790
4822.12
4815.11 4821.70
4814.77 4821.27
4813.50 4820.85
4794.11 4820.42
4794.85 4819.93
4796.22 4819.34
4810.17 4818.65
4809.45 4817.87
4808.77 4816.99
4807.94 4816.02
4807.81 4814.95
4806.79 4813.78
4805.78 4812.51
4804.43 4811.15
4802.93 4809.70
4801.46 4808.14
4799.59 4806.49
4797.67 4804.75
4796.09 4802.97
4794.68 4801.20
4793.16 4799.42
4792.30 4797.55
4791.63 4795.87
4790.59 4794.10
4789.31 4792.33
4787.80 4790.55
4786.86 4788.78
4786.46
148+00
149+00
150+00
151+00
152+00
153+00
154+00
155+00
156+00
157+00
158+00
159+00
160+00
161+00
162+00

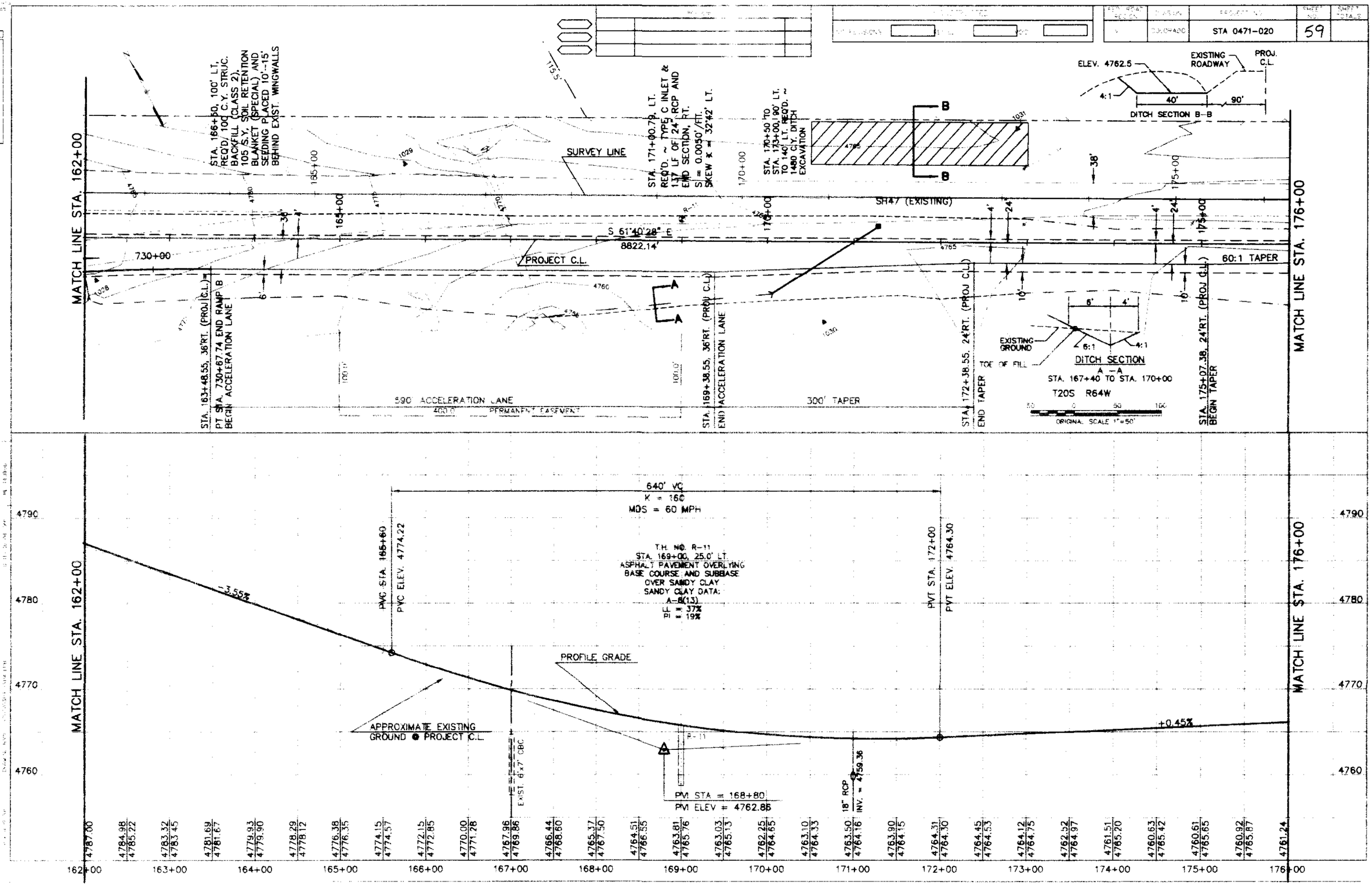
MATCH LINE STA. 162+00
MATCH LINE STA. 176+00
STA. 166+50, 100' LT, REQ'D. / 100 C.Y. STRUC. BACKFILL (CLASS 2), 105 S.Y. SOIL RETENTION BLANKET (SPECIAL) AND SEEDING PLACED 10'-15' BEHIND EXIST. WINGWALLS
SURVEY LINE
STA. 171+00.79, LT. REQ'D. ~ TYPE C INLET & 117 LF OF 24" RCP AND END SECTION, RT. SI = 0.0050'/FT. SKEW ∡ = 32°42' LT.
STA. 170+50 TO STA. 173+00, 90' LT. TO 140' LT. REQ'D. ~ 1490 C.Y. DITCH EXCAVATION
SH47 (EXISTING)
S 61°40'28" E
8822.14'
PROJECT C.L.
60:1 TAPER
STA. 163+48.55, 36'RT. (PROJ C.L.) PT STA. 730+67.74 END RAMP B BEGIN ACCELERATION LANE
590' ACCELERATION LANE
400.0' PERMANENT EASEMENT
STA. 169+38.55, 36'RT. (PROJ C.L.) END ACCELERATION LANE
300' TAPER
STA. 172+38.55, 24'RT. (PROJ C.L.) END TAPER
STA. 175+07.38, 24'RT. (PROJ C.L.) BEGIN TAPER
ELEV. 4762.5
EXISTING ROADWAY
PROJ. C.L.
DITCH SECTION B-B
EXISTING GROUND
TOE OF FILL
DITCH SECTION A-A
STA. 167+40 TO STA. 170+00
T20S R64W
ORIGINAL SCALE 1"=50'
640' VC
K = 160
MDS = 60 MPH
PVC STA. 165+60
PVC ELEV. 4774.22
PVT STA. 172+00
PVT ELEV. 4764.30
T.H. NO. R-11
STA. 169+00, 25.0' LT.
ASPHALT PAVEMENT OVERLYING BASE COURSE AND SUBBASE OVER SANDY CLAY
SANDY CLAY DATA:
A-6(13)
LL = 37%
PI = 19%
-3.55%
+0.45%
PROFILE GRADE
APPROXIMATE EXISTING GROUND @ PROJECT C.L.
EXIST. 6'x7' CBC
PVI STA = 168+80
PVI ELEV = 4762.86
18" RCP INV. = 4759.36
4790
4780
4770
4760
162+00
163+00
164+00
165+00
166+00
167+00
168+00
169+00
170+00
171+00
172+00
173+00
174+00
175+00
176+00

Xref'd Drawings

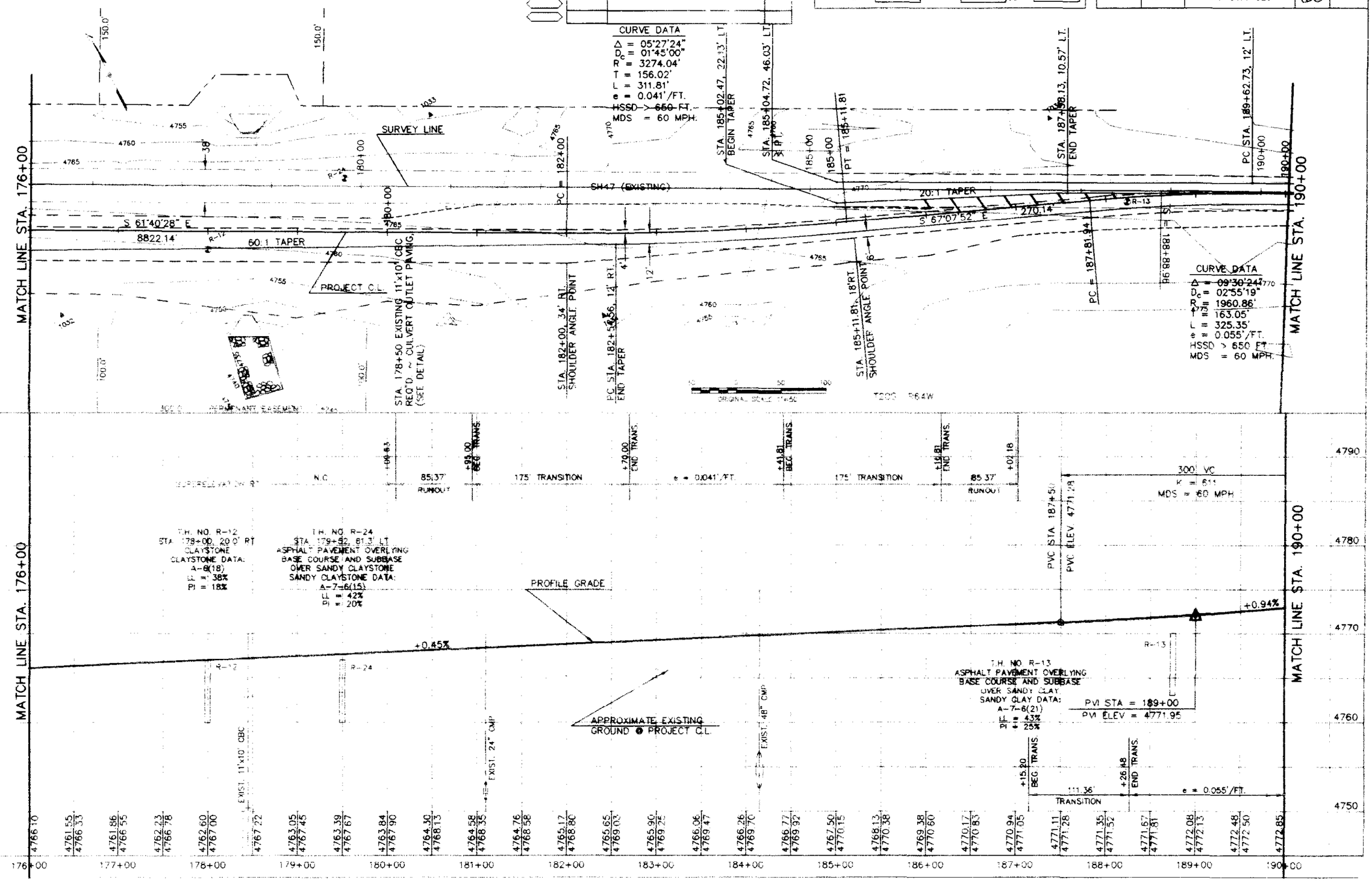

INITIAL	DATE	CHECKED BY
		QUANTITIES BY
		CHECKED BY

DESIGNED BY
CHECKED BY
DETAILED BY

PROJECT NO.	SHEET NO.	SHEET TOTAL
STA 0471-020	61	

END PROJECT NO. STA 0471-020
STA. 191+07.29 (PROJ. C.L.)
END OVERLAY / END WIDENING =
STA. 191+34.97 PROJECT FCU 047-1(10) =
M.P. 3.19

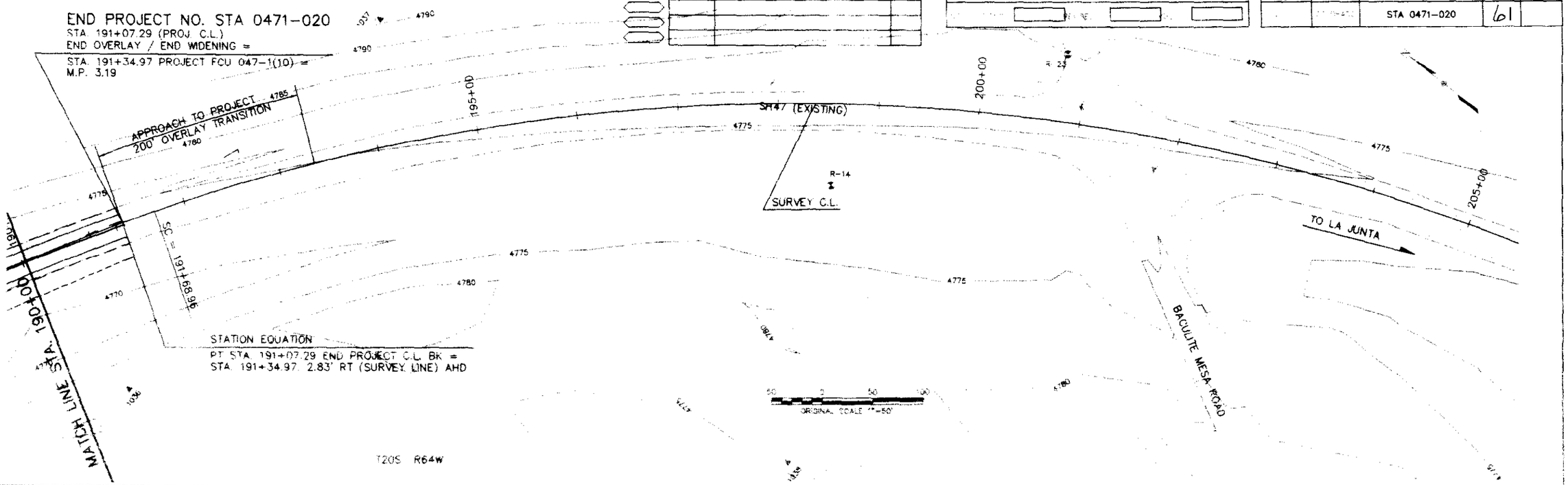

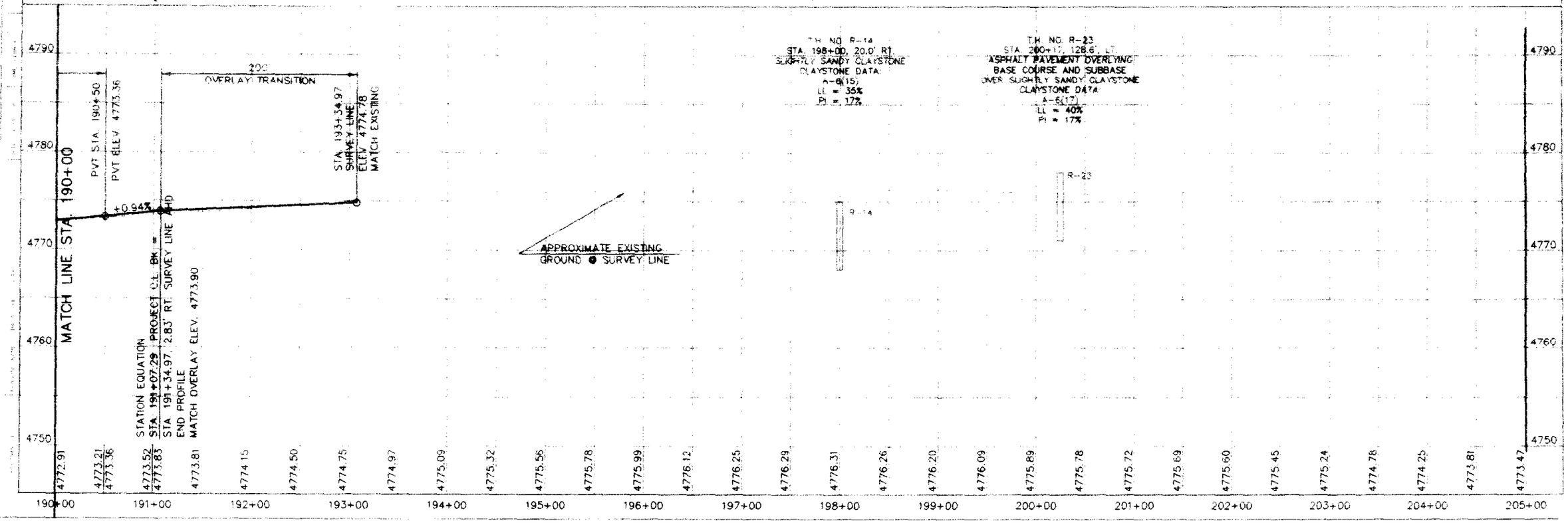

INITIAL	DATE	
		CHECKED BY
		QUANTITIES BY
		CHECKED BY

DESIGNED BY
CHECKED BY
IN CALCD BY

DIVISION	PROJECT NO.	SHEET NO.	SHEET TOTALS
	STA 0471-020	62	

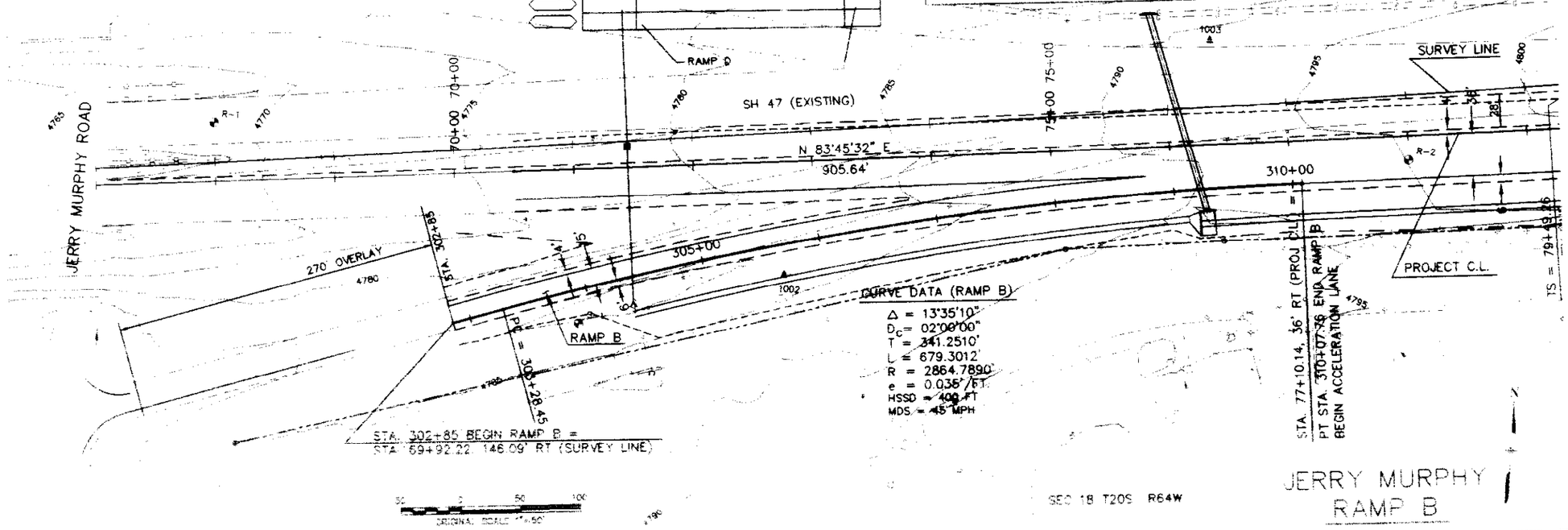

JERRY MURPHY
RAMP B

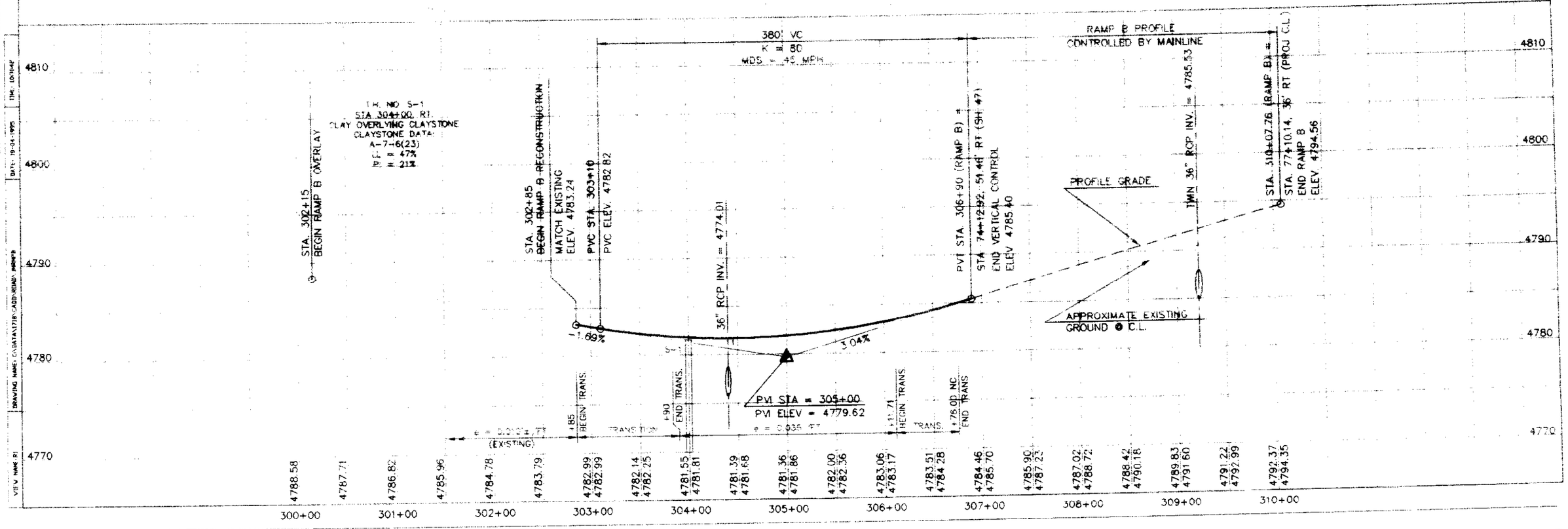

Xref'd Drawings

DESIGNED BY | DATE | INITIAL | CHECKED BY
CHECKED BY | QUANTITIES BY
DETAILED BY | CHECKED BY

DATE: 10-04-1995 TIME: 10:31AM

DRAWING NAME: C:\DATA\1718\CADD\ROAD\ RAMPB

VIEW NAME: R1

FED. ROAD REGION	DIVISION	PROJECT NO.	SHEET NO.	SHEET TOTALS
	COLORADO	STA 0471-020	63	

NO REVISIONS

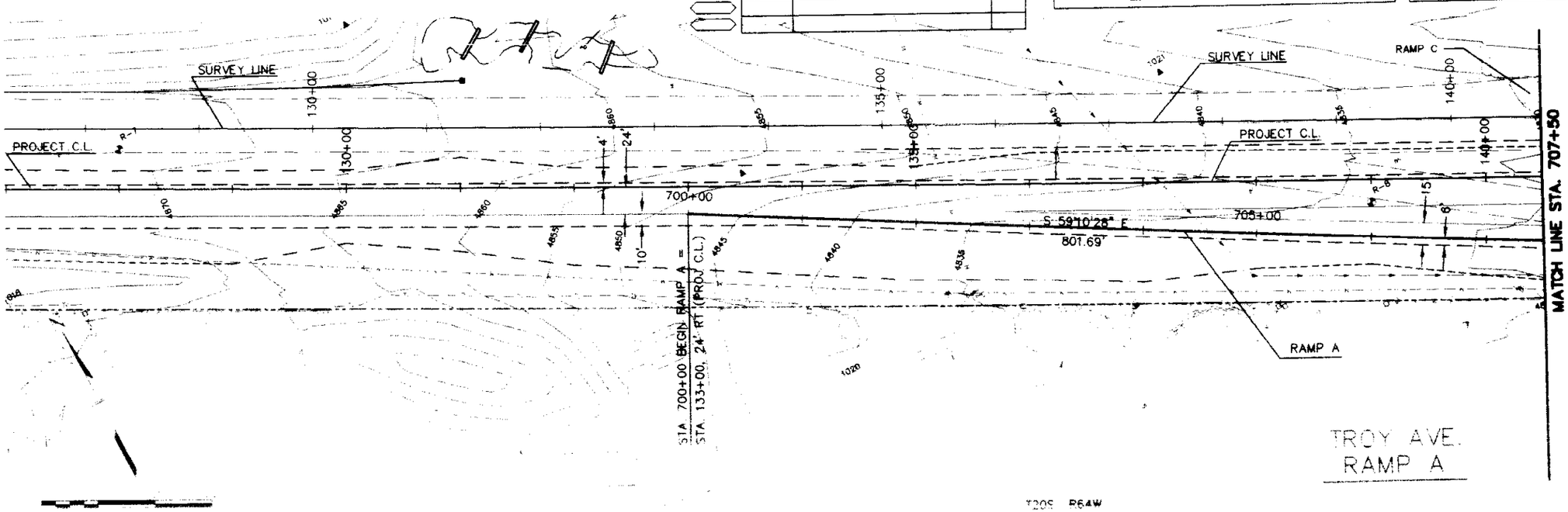

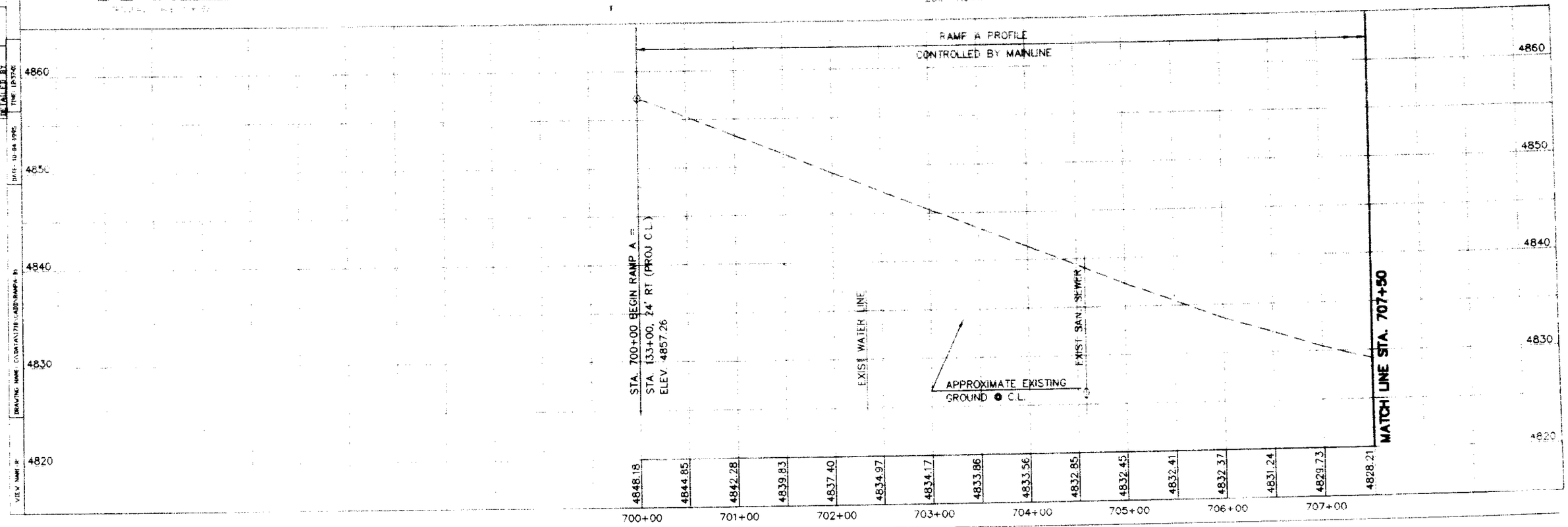

Xref'd Drawings

INITIAL	DATE	
DESIGNED BY		
CHECKED BY		CHECKED BY
QUANTITIES BY		
CHECKED BY		

SURVEY LINE
RAMP C
PROJECT C.L.
MATCH LINE STA. 707+50
MATCH LINE STA. 720+00
STA. 711+50 (RAMP A)
END RAMP RECONSTRUCTION
STA. 144+47 (PROJ. CL.)
RAMP A
RAMP B
TROY AVE.
830' OVERLAY
STA. 718+40 BEGIN OVERLAY
STA. 150+38.58, 185.84' RT (PROJ C.L.)
PI STA. 717+48.35 (RAMP A & B) =
STA. 719+30
REQ'D. ~ 30 LF 4 INCH AND
30 LF 6 INCH GALVANIZED
PIPE IRRIGATION SLEEVING
CURVE DATA (RAMP A)
Δ = 06°13'49"
D = 02°00'00"
T = 155.9087'
L = 311.5100'
R = 2864.7890'
e = 0.035'/FT.
TROY AVE
RAMP A-B

MATCH LINE STA. 707+50
MATCH LINE STA. 720+00
PVI STA = 710+50
PVI ELEV = 4823.59
-1.70%
-2.80%
APPROXIMATE EXISTING GROUND @ C.L.
PROFILE GRADE
PVC STA. 708+50 (RAMP A) = STA. 141+49.17, 61.48 RT (PROJ. C.L.) BEGIN VERTICAL CONTROL ELEV. 4826.99
PVC STA. 709+50 ELEV 4825.29
PVT STA. 711+50 END VERTICAL CONTROL
MATCH EXISTING ELEV. 4820.79
200' VC
K = 181
SSD > 325 FT
MDS = 45 MPH
FUTURE RECONSTRUCTION
EXIST 24" RCP
PI STA. 717+48.35 END RAMP A
STA. 717+48.35 BEGIN RAMP B
(EXISTING)
4820
4810
4800
4790
4826.93
4826.64
4826.59
4825.99
4825.18
4823.77
4822.28
4820.79
4818.95
4815.94
4812.94
4809.91
4806.84
4803.95
4801.03
4798.15
4795.38
4793.79
4792.99
4793.83
4793.13
4792.86
4792.61
4792.65
4793.02
708+00
709+00
710+00
711+00
712+00
713+00
714+00
715+00
716+00
717+00
718+00
719+00
720+00

PROJECT REGION	PROJECT	PROJECT NO.	SHEET NO.	SHEET TOTALS
1	COLFAX	STA 0471-020	65	

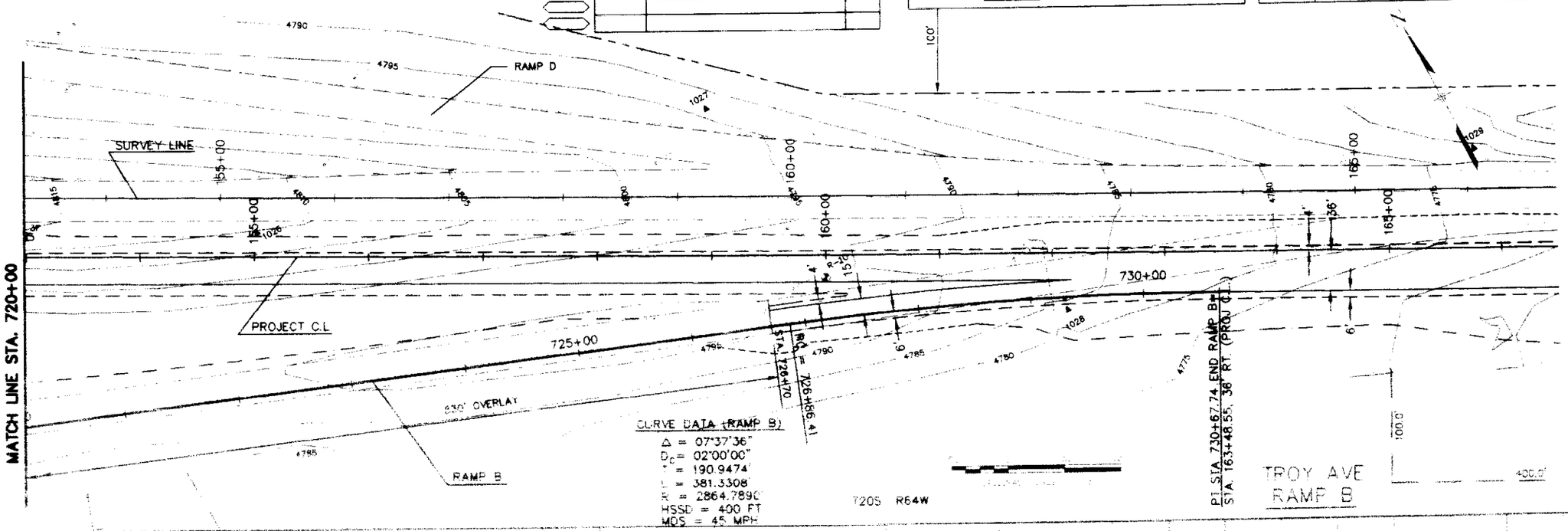

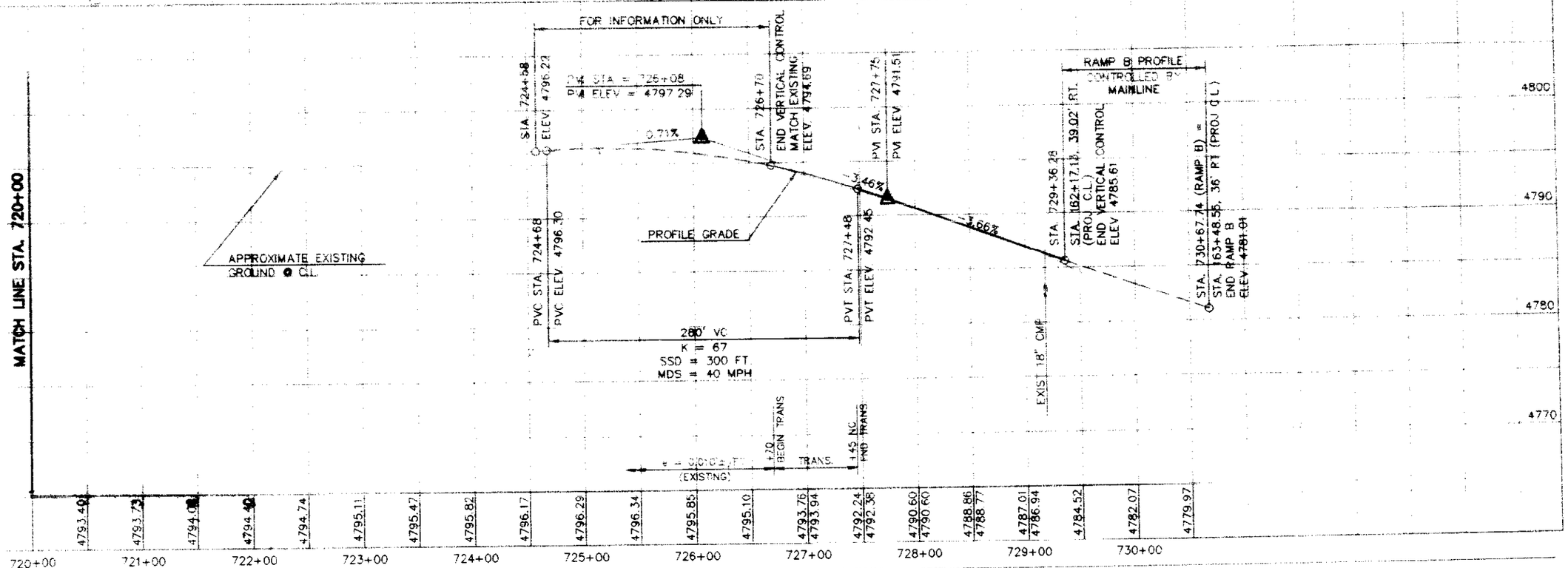

STATE OF COLORADO
STATE DEPARTMENT OF HIGHWAYS
DIVISION OF HIGHWAYS
D. O. H. FORM NO. 126
REV. FEB. 1984

REVISIONS		

AS CONSTRUCTED
NO REVISIONS: ☐ REVISED: ☐ VOID: ☐

FED. ROAD REGION	DIVISION	PROJECT NO.	SHEET NO.	SHEET TOTALS
	COLORADO	STA 0471-020	66	

	INITIAL	DATE			
DESIGNED BY			CHECKED BY		
CHECKED BY			QUANTITIES BY		
DETAILED BY			CHECKED BY		

DATE: 10-05-1995
TIME: 10:08:31
DRAWING NAME: C:\DATA\1718\CADD\ROAD\PRF.DITC
VIEW NAME: DITCH2

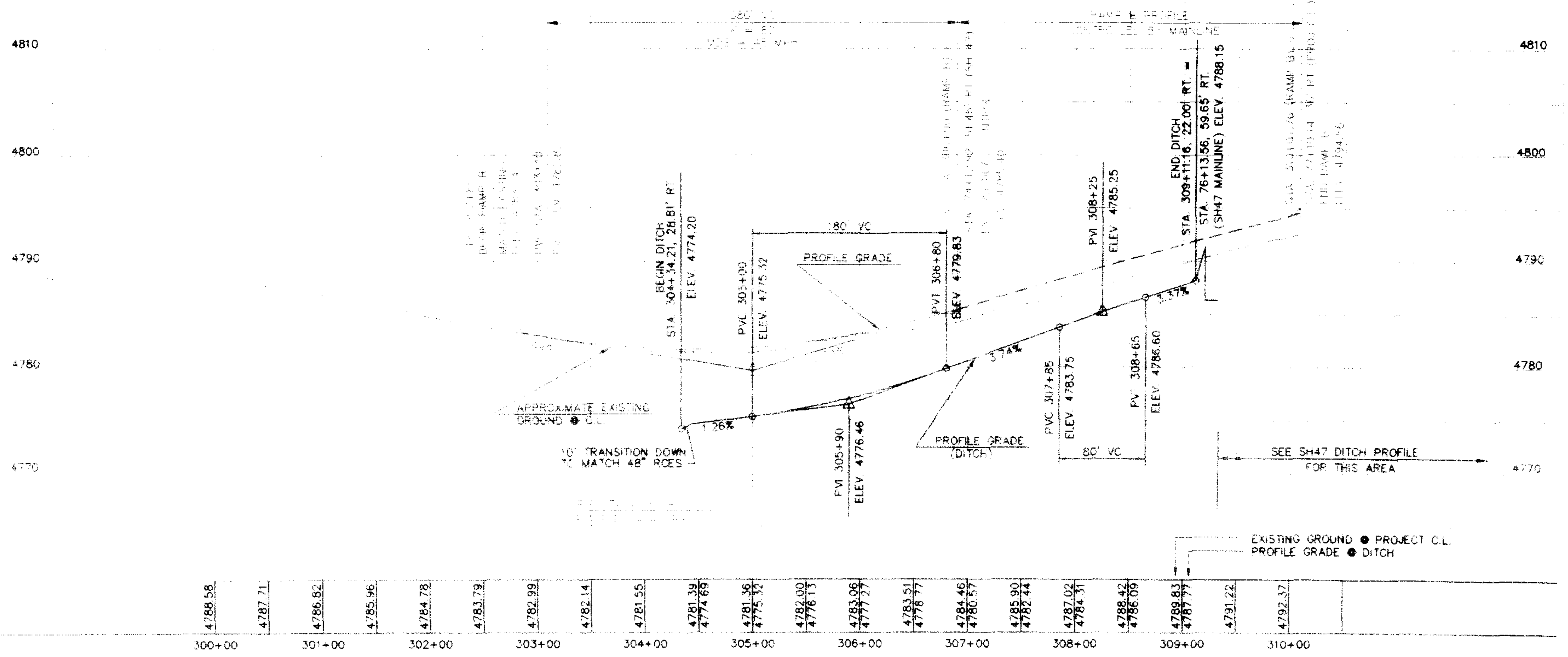

JERRY MURPHY RAMP B DITCH PROFILE

STATE OF COLORADO
STATE DEPARTMENT OF HIGHWAYS
DIVISION OF HIGHWAYS
D. O. H. FORM NO. 126
REV. FEB. 1984

						STA 0471-020	67

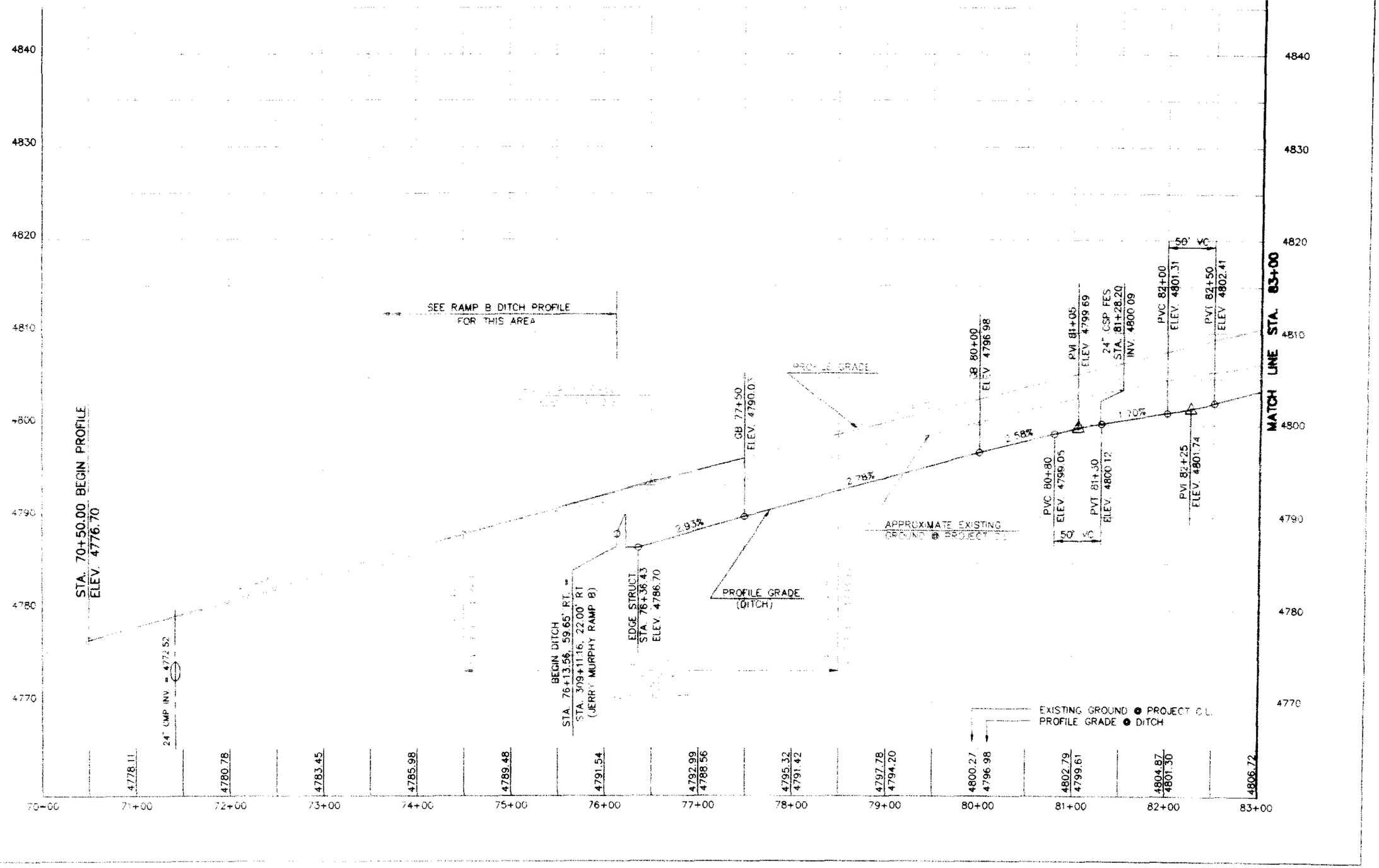

DESIGNED BY	INITIAL	DATE	CHECKED BY
CHECKED BY			QUANTITIES BY
DETAILED BY			CHECKED BY

DATE: 10-05-1995 TIME: 15:38:31

VIEW NAME: DITCH DRAWING NAME: C:\DATA\1718\CADD\ROAD\PROFDITC

SH47 MAINLINE DITCH PROFILE

STATE OF COLORADO
STATE DEPARTMENT OF HIGHWAYS
DIVISION OF HIGHWAYS
D. C. H. FORM NO. 1261
REV. FEB. 1984

FED. AID PROJ. NO.	DIVISION	PROJECT NO.	SHEET NO.	SHEET TOTAL
		STA 0471-020	68	

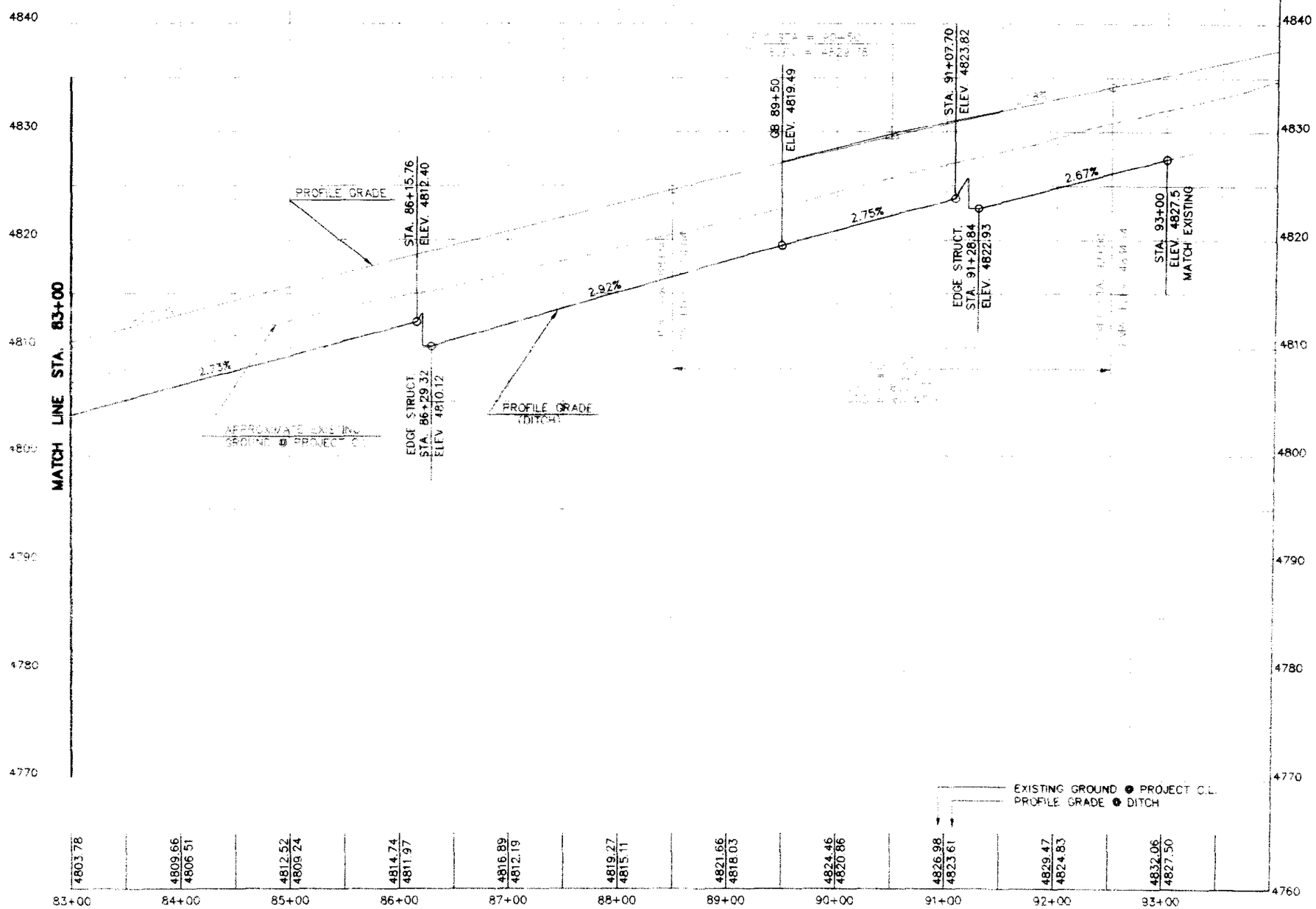

SH47 MAINLINE DITCH PROFILE

FED. ROAD REGION	DIVISION	PROJECT NO	SHEET NO	SHEET TOTALS
	COLORADO	STA 0471-020	69	

LEGEND

WETLAND TOPSOIL PLACEMENT

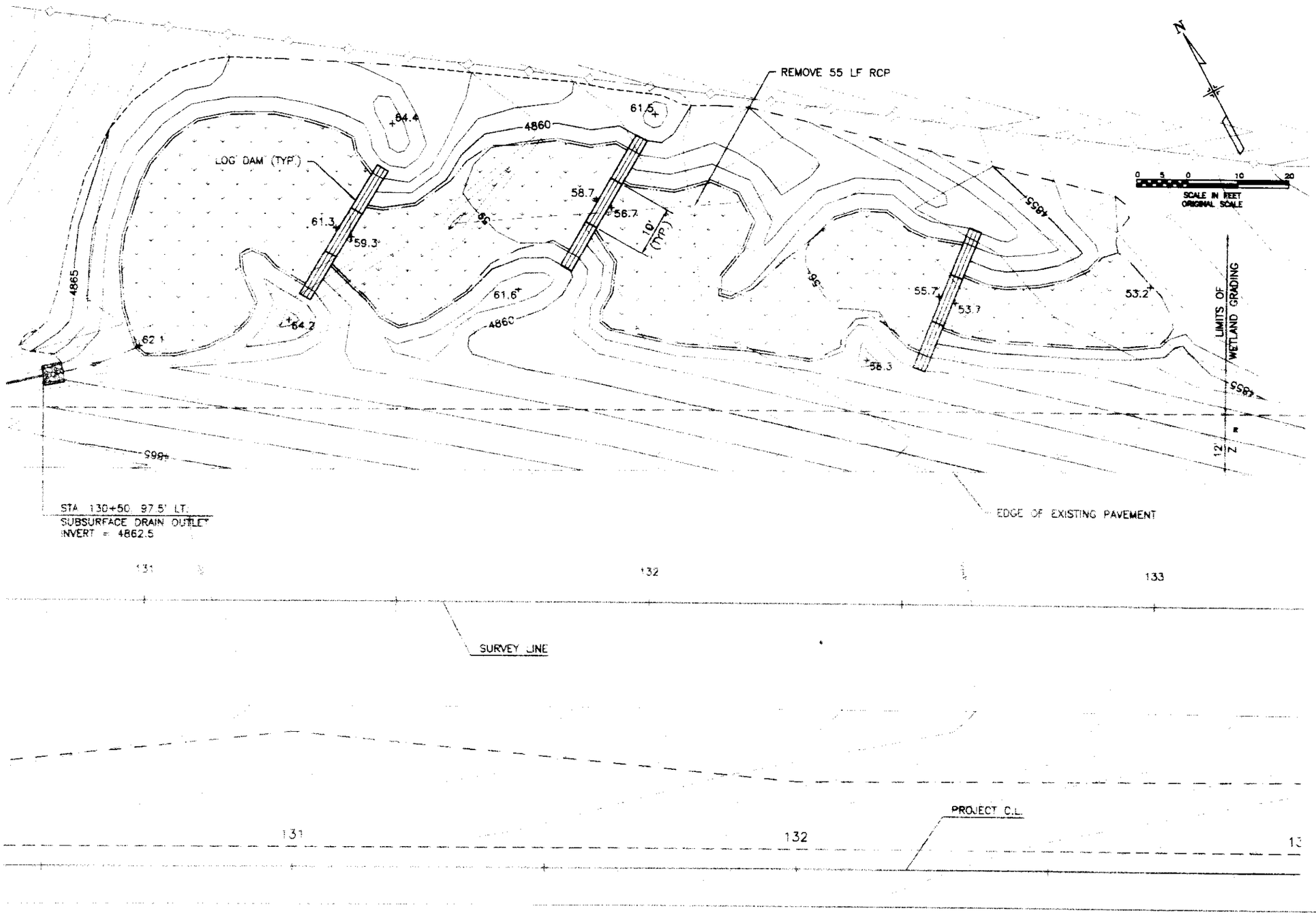

WETLAND MITIGATION PLAN NOTES:

THE CONTRACTOR SHALL GIVE THE ENGINEER A TWO WEEK NOTICE PRIOR TO EXCAVATING AND FINAL GRADING THE WETLAND MITIGATION AREA SO THAT THE ENGINEER CAN CONTACT THE STAFF LANDSCAPE ARCHITECT TO BE ON THE SITE.

IT IS ESTIMATED THAT 20 HOURS OF DOZING (LANDSCAPING) WITH A DOZER (55 TO 75 HP RANGE) WILL BE REQUIRED TO FINAL GRADE THE WETLAND MITIGATION AREA.

UNDULATE THE SIDE SLOPES OF THE WETLAND MITIGATION AREA FROM 3:1 TO 10:1 TO PROVIDE HABITAT DIVERSITY.

EXCAVATE APPROXIMATELY 180 CY OF WETLAND TOPSOIL FROM THE AREA LOCATED FROM STA. 118+00 TO 120+00, RT. AS SHOWN ON THE PLANS. PLACE WETLAND TOPSOIL TO A DEPTH OF 12".

FINAL GRADES IN THE MITIGATION AREA SHALL BE LEFT IN A ROUGHENED CONDITION.

SEE STORMWATER MANAGEMENT SHEETS FOR EROSION CONTROL DETAILS.

IT IS ESTIMATED THAT APPROXIMATELY 342 CY OF UNCLASSIFIED EXCAVATION WILL BE REQUIRED FOR THE GRADING OF THE WETLAND MITIGATION AREA. THIS MATERIAL WILL NOT BE PAID FOR SEPARATELY BUT SHALL BE INCLUDED IN THE WORK. (SEE EARTHWORK SUMMARY).

WETLAND TABULATION

ITEM	DESCRIPTION	UNIT	QUANT
203	DOZING (LANDSCAPING)	HR	20
207	WETLAND TOPSOIL	CY	180

WETLAND MITIGATION PLAN

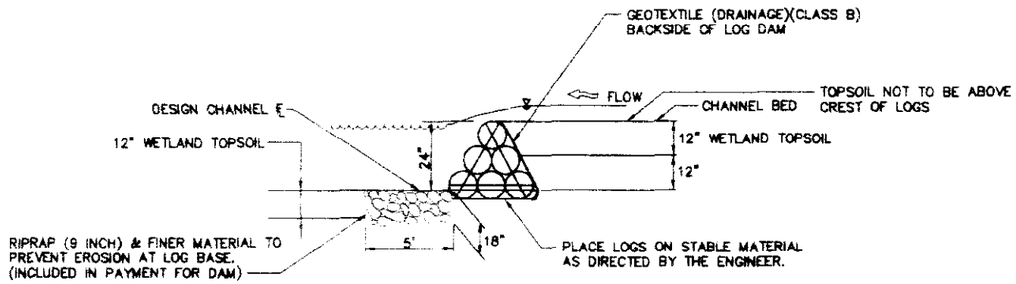

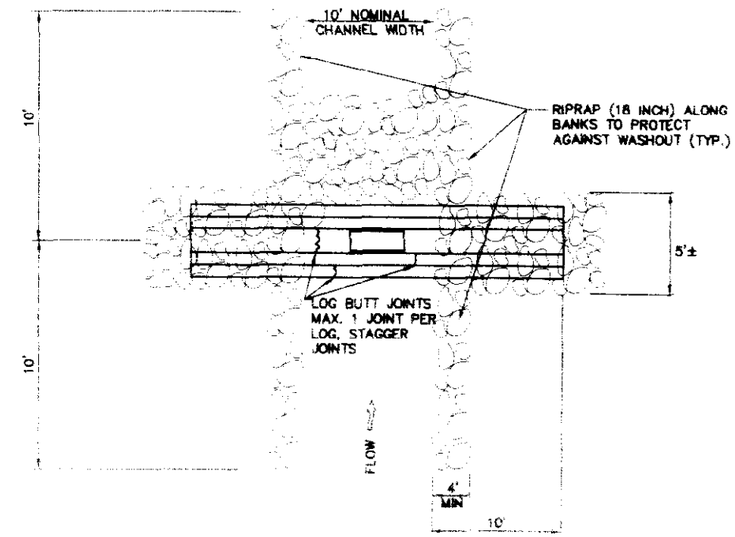

PLAN

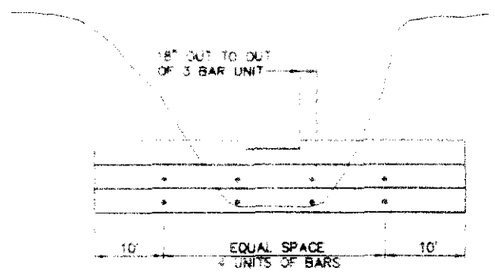

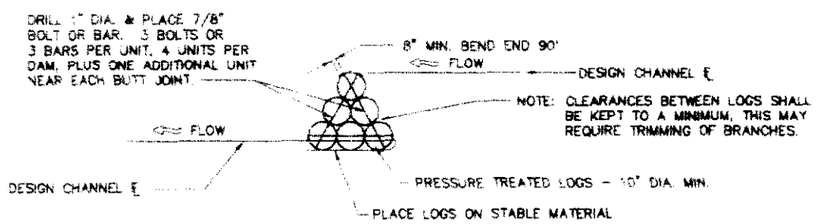

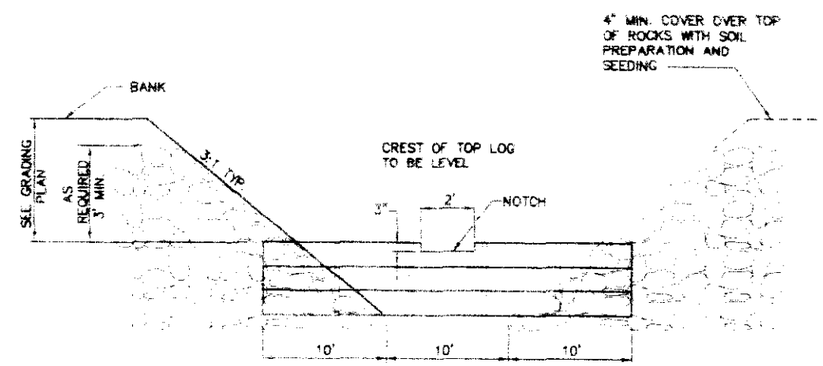

DOWNSTREAM LOOKING UPSTREAM ELEVATION

PAY ITEMS

420	GEOTEXTILE (DRAINAGE)(CLASS B)	SQ. YDS.	30 Ø
506	RIPRAP (9 INCH)	CU. YDS.	90 ●
506	RIPRAP (18 INCH)	CU. YDS.	123
615	LOG DAM	EACH	3

ALL COSTS FOR INSTALLING LOGS INCLUDING COST OF BARS OR BOLTS, NUTS & WASHERS AND ANY SAWING, PLACEMENT, EXCAVATION & BACKFILL SHALL BE INCLUDED IN THE COST OF LOG DAM.

● FOR INFORMATION ONLY

Ø QUANTITY CARRIED TO STRUCTURE QUANTITIES LIST

WETLAND DROP STRUCTURE DETAILS
AND TABULATION

AS CONSTRUCTED				FED. ROAD REGION	DIVISION	PROJ. NO.	SHEET NO.
NO REVISIONS	REVISED	VOID		VIII	COLO.	STA 0471-020	71

STORMWATER MANAGEMENT PLAN - ADDITIONAL INFORMATION

Estimated Runoff coefficient
Pre-construction: 0.49 Post-construction: 0.57

Existing data describing soil or quality of discharge: SANDY CLAYS AND WEATHERED TO VERY HARD CLAYSTONE BEDROCK.

Existing vegetation: SPARSE TO MEDIUM NATIVE GRASSES AND WEEDS.

Proposed sequence for major activities, location of any other potential pollution source, areas used for storage of building materials, soils or wastes, and location of any dedicated asphalt or concrete batch plants: see water quality and erosion control specifications, and documents submitted by the contractor at the preconstruction conference.

100-year Flood plain boundaries: see bridge hydraulic information sheet (if existent).

Description of the construction activity, estimate of the total site area and of the area expected to undergo excavation, and name of the receiving water: see CDPS stormwater permit application.

Site map and construction site boundaries: see title sheet

Areas of cuts and fills and areas of soil disturbance: see plan and profile sheets and roadway cross sections.

Surface waters: see title sheet and bridge hydraulic information sheet (if existent)

Materials handling and spill prevention: see water quality specification (107.25).

Inspection and maintenance: see erosion control specifications (107.25 or 208).

Contract Document location of erosion control and stormwater quality management measures not referenced above nor included on the Stormwater management Plan Sheet(s):

N/A

TABULATION OF EROSION CONTROL ITEMS

LOCATION (STA.)	SIDE	EROSION BALES (EACH)		SILT FENCE (L.F.)
		EROSION BALE FILTER	EROSION CONTROL CHECK DAM	
304+45, RAMP B	RT.	5		
73+00, SH47 TO 95+00, SH47 (200 FT. SPACING)	RT.		60	
110+00, SH47 TO 118+00, SH47 (200 FT. SPACING)	RT.		10	
122+00, SH47 TO 130+00, SH47	RT.		10	
131+10, SH47 AND 132+90, SH47	LT.		4	
132+00, SH47	RT.			30
137+00 SH47	RT.			20
167+50, SH47	RT.	20		
707+00, RAMP A TO 715+00, RAMP A (200 FT. SPACING)	RT.		10	
716+80, RAMP A	LT.	10		
718+80, RAMP B	LT.	10		
TOTAL		46	94	50

SEEDING PLAN

SOIL PREPARATION, FERTILIZER, SEEDING AND MULCHING WILL BE REQUIRED FOR AN ESTIMATED 25 ACRES OF DISTURBED AREA WITHIN THE RIGHT-OF WAY LIMITS WHICH ARE NOT SURFACED.

THE FOLLOWING TYPES AND RATES SHALL BE USED:

COMMON NAME	BOTANICAL NAME	LBS PLS/ACRE
BLUE GRAMA V. HACHITA	BOUTELOUA GRACILIS	0.3
WESTERN WHEATGRASS V. ARRIBA	PASCOPYRUM SMITHII	7.0
SIDEOATS GRAMA V. VAUGHN	BOUTELOUA CURTIPENDULA	1.0
GALLETA V. VIVA (CARYOPSIS)	HILARIA JAMESII	1.0
ALKALI SACATON	SPOROBOLUS AIROIDES	0.4
SWITCHGRASS V. NEBR 28	PANICUM VIRGATUM	1.0
BLANKETFLOWER	GAILLARDIA ARISTATA	1.0
PRAIRIE CONEFLOWER	RATIBIDA COLUMNIFERA	0.1
OATS	AVENA SATIVA	5.0
	TOTAL	16.8

SEEDING APPLICATION: DRILL SEED 0.25" - 0.5" INTO THE TOPSOIL.

MULCHING APPLICATION: 1 1/2 TONS NATIVE HAY PER ACRE MECHANICALLY CRIMPED INTO THE TOPSOIL IN COMBINATION WITH AN ORGANIC MULCH TACKIFIER PER SPECIAL PROVISION 213.

SPECIAL REQUIREMENTS: * IF FALL SEEDING SUBSTITUTE WITH WINTER WHEAT (TRITICUM AESTIVUM) AT 5 LBS. PLS/ACRE

FERTILIZER	RATE PER ACRE
NITROGEN	45
PHOSPHORUS (P205)	87
POTASSIUM (K20)	43.5
ZINC SULFATE	11
IRON CHELATE	11

PROJECT PAY TOTALS

PAY ITEM	DESCRIPTION	UNIT	TOTALS
208	SILT FENCE	LF	50
208	EROSION BALE	EACH	140
212	SEEDING (NATIVE)	ACRE	20
212	SOIL PREPARATION (SPECIAL)	ACRE	20
213	MULCHING (NATIVE)	ACRE	20
213	MULCH TACKIFIER	LB	2500
F/A	TEMPORARY EROSION CONTROL	FA	1

*FERTILIZER	(NITROGEN)	LB	1125
*FERTILIZER	(PHOSPHORUS P205)	LB	2175
*FERTILIZER	(POTASSIUM K20)	LB	1087.5
*FERTILIZER	ZINC SULFATE	LB	275
*FERTILIZER	IRON CHELATE	LB	275
*SEEDING (NATIVE)		LB	420
*MULCHING (NATIVE)		TONS	30

*FOR INFORMATION ONLY

SPECIAL PROJECT NOTES:

PLACEMENT OF TOPSOIL, SEEDING AND MULCHING WILL NOT BE DONE IN A SINGLE OPERATION, BUT SHALL BE COMPLETED AFTER EACH CONSTRUCTION PHASE. IT IS ESTIMATED THAT THREE MOBILIZATIONS FOR SOIL PREPARATION, SEEDING, AND MULCHING WILL BE REQUIRED AND SHALL BE INCLUDED IN THE PRICE OF THE WORK.

DISTURBED SURFACES SHALL BE LEFT IN A ROUGHENED CONDITION AT ALL TIMES DURING CONSTRUCTION.

WHEN DISTURBED AREA EXCEEDS LIMITS REFERENCED IN THE STANDARD SPECIAL PROVISION 208, APPLY 2 TONS PER ACRE NATIVE HAY MECHANICALLY CRIMPED INTO THE SOIL. IT IS ESTIMATED THAT SEVERAL MOBILIZATIONS FOR MULCHING WILL BE REQUIRED AND SHALL BE INCLUDED IN THE PRICE OF THE WORK.

PRIOR TO WINTER SHUTDOWN ALL COMPLETED SLOPES SHALL BE TOPSOILED, SEEDED, AND MULCHED. UNCOMPLETED SLOPES SHALL BE MULCHED WITH 1 1/2 TONS NATIVE HAY MECHANICALLY CRIMPED IN COMBINATION WITH AN ORGANIC MULCH TACKIFIER PER PROJECT SPECIAL PROVISION 213.

SEDIMENT REMOVAL AND DISPOSAL SHALL BE INCLUDED IN THE WORK.

COLORADO
DEPARTMENT OF TRANSPORTATION

STORMWATER MANAGEMENT PLAN

DESIGNER D. HILLIARD

DESIGNED BY | CHECKED BY | DETAILED BY | INK: dadams | INITIAL | DATE | CHECKED BY | QUANTITIES BY | CHECKED BY

DATE: 11-07-1995

DRAWING NAME: C:\DATA\7\RVCADD\MNDLSTR.DGN

VIEW MANUAL

STATE OF COLORADO
STATE DEPARTMENT OF HIGHWAYS
DIVISION OF HIGHWAYS
D O H FORM NO 126
REV FEB. 1984

PROJECT NO.	SHEET NO.	SHEET TOTAL
STA 0471-020	72	

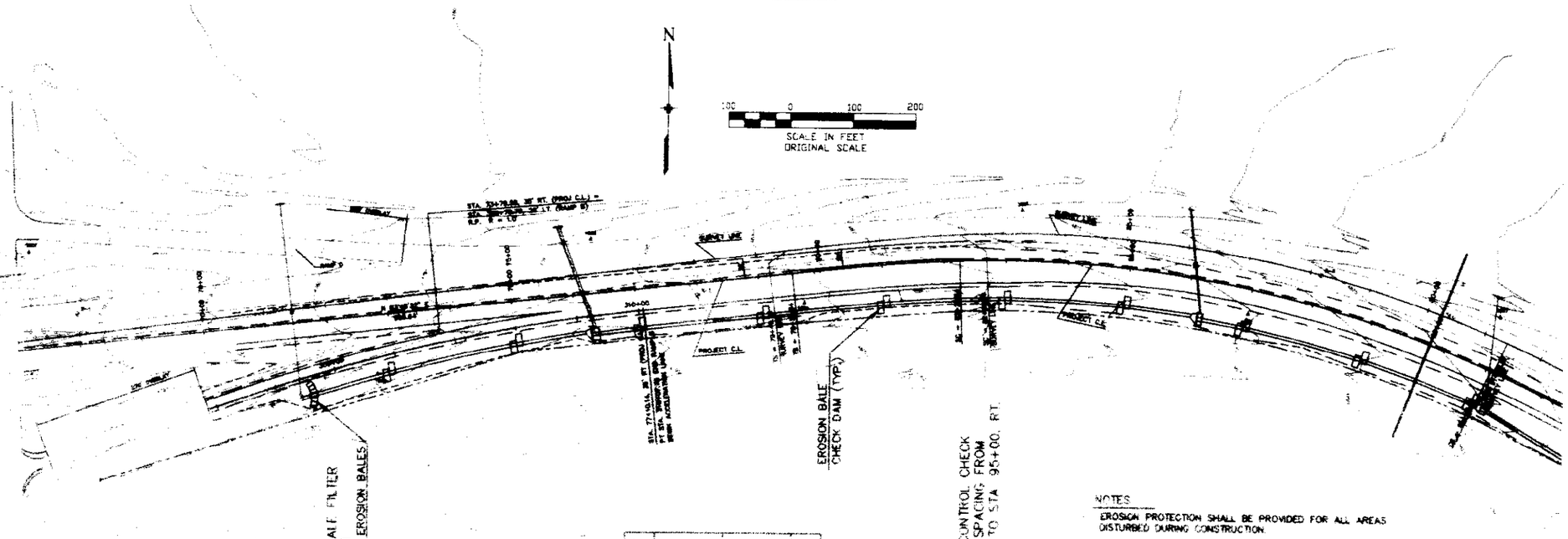

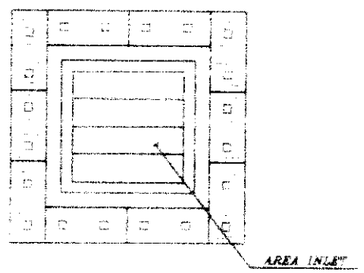

EROSION BALE FILTER

NOTES

1. EROSION PROTECTION SHALL BE PROVIDED FOR ALL AREAS DISTURBED DURING CONSTRUCTION.
2. INSTALLATION OF SOIL EROSION CONTROLS SHALL BE IN ADVANCE OF ANY CONSTRUCTION ACTIVITY WHICH MAY PRODUCE SEDIMENT CONTAMINATED RUNOFF.
3. EROSION BALE STAKES SHALL NOT BE PLACED THROUGH GEOTEXTILE FABRIC. CHECK DAMS SHALL BE REMOVED, IF NECESSARY, PRIOR TO PLACEMENT OF GEOTEXTILE FABRIC.
4. ALL WORK NECESSARY TO CONTROL EROSION AND MAINTAIN WATER QUALITY DURING CONSTRUCTION SHALL BE PAID FOR UNDER THE APPROPRIATE BID ITEMS OR FORCE ACCOUNT.
5. ALL WORK SHALL BE PERFORMED IN ACCORDANCE WITH SECTION 208 OF THE STANDARD SPECIAL PROVISIONS AND IN ACCORDANCE WITH THESE DETAILS.
6. EROSION BALES SHALL BE PLACED WITH RESPECT TO THE SHAPE OF THE DITCH. WHERE BALES ARE TO BE STAGGERED, OVERLAP BALES A MINIMUM OF 6 INCHES. REFER TO DETAILS FOR TYPICAL EROSION BALE CHECK DAM CONFIGURATION.

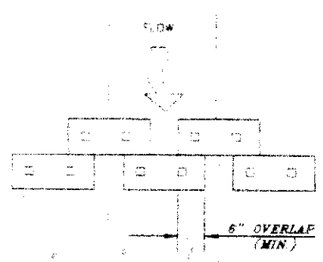

PLAN

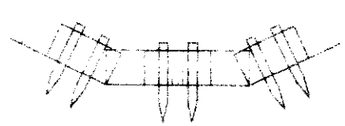

FLAT BOTTOM DITCH

V - DITCH

EROSION CONTROL CHECK DAM

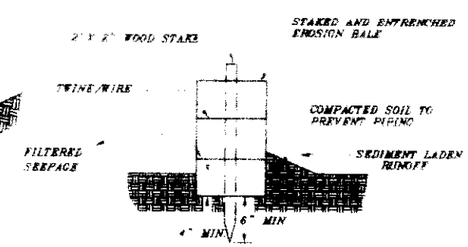

CROSS SECTION OF A PROPERLY INSTALLED EROSION BALE

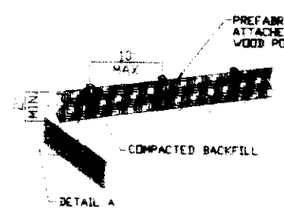

SILT FENCE DETAIL
NOT TO SCALE

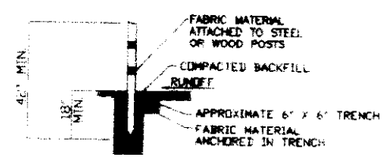

DETAIL A
NOT TO SCALE

INITIAL	DATE	
DESIGNED BY		
CHECKED BY		
DETAILED BY		
CHECKED BY		
QUANTITIES BY		
CHECKED BY		

STORMWATER MANAGEMENT PLAN

STATE OF COLORADO
STATE DEPARTMENT OF HIGHWAYS
DIVISION OF HIGHWAYS
D. O. H. FORM NO. 126
REV. FEB. 1984

REGION	DIVISION	PROJECT NO.	SHEET NO.	SHEET TOTAL
		STA 0471-020	73	

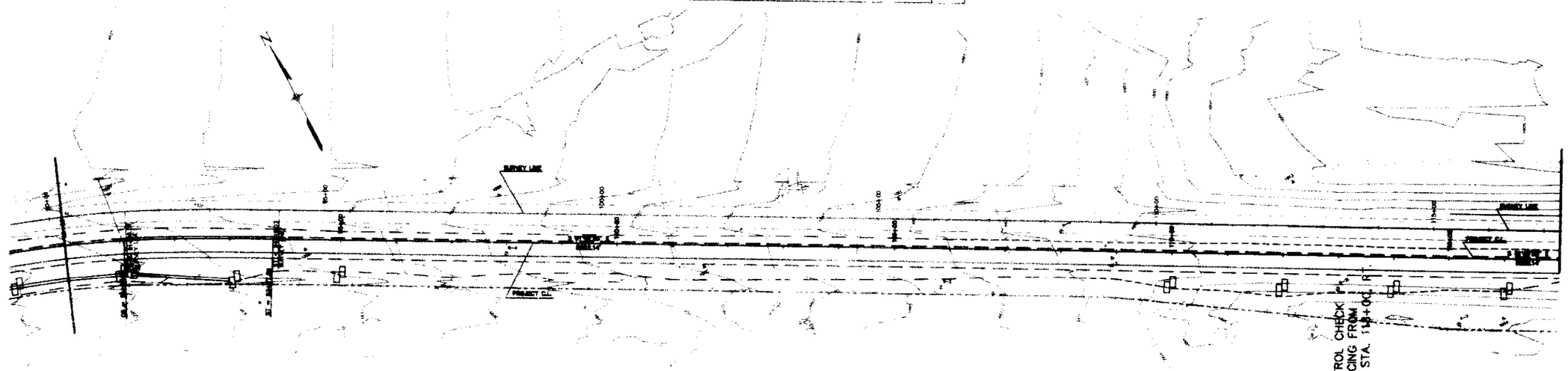

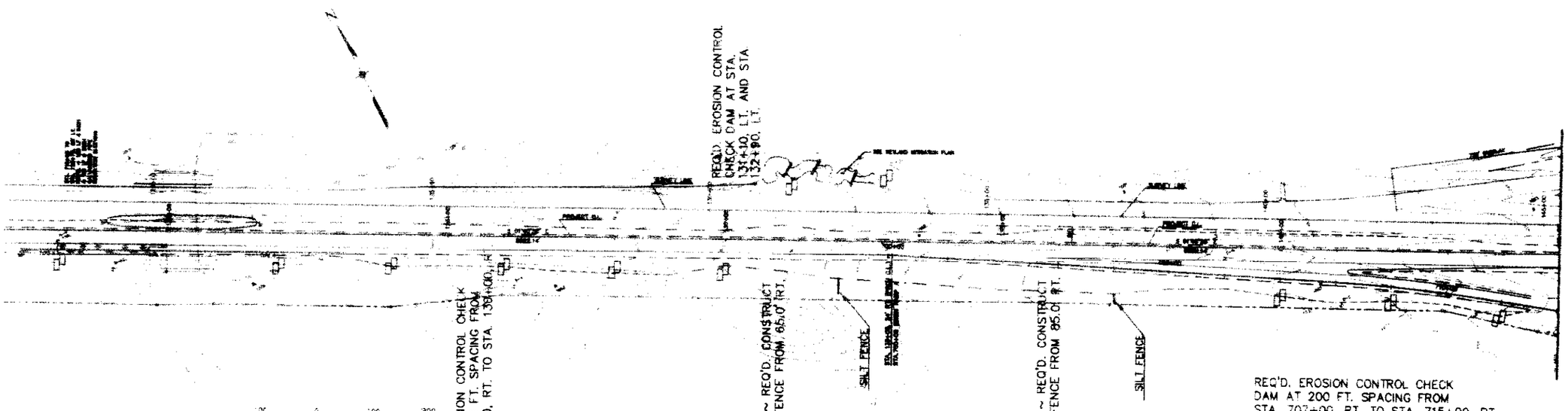

STORMWATER MANAGEMENT PLAN

	INITIAL	DATE	CHECKED BY
DESIGNED BY			
CHECKED BY			QUANTITIES BY
DETAILED BY			CHECKED BY

STATE OF COLORADO
STATE DEPARTMENT OF HIGHWAYS
DIVISION OF HIGHWAYS
D.O.H. FORM NO. 1261
REV. FEB. 1994

PROJECT NO.	SHEET NO.	SHEET TOTALS
STA 0471-020	74	

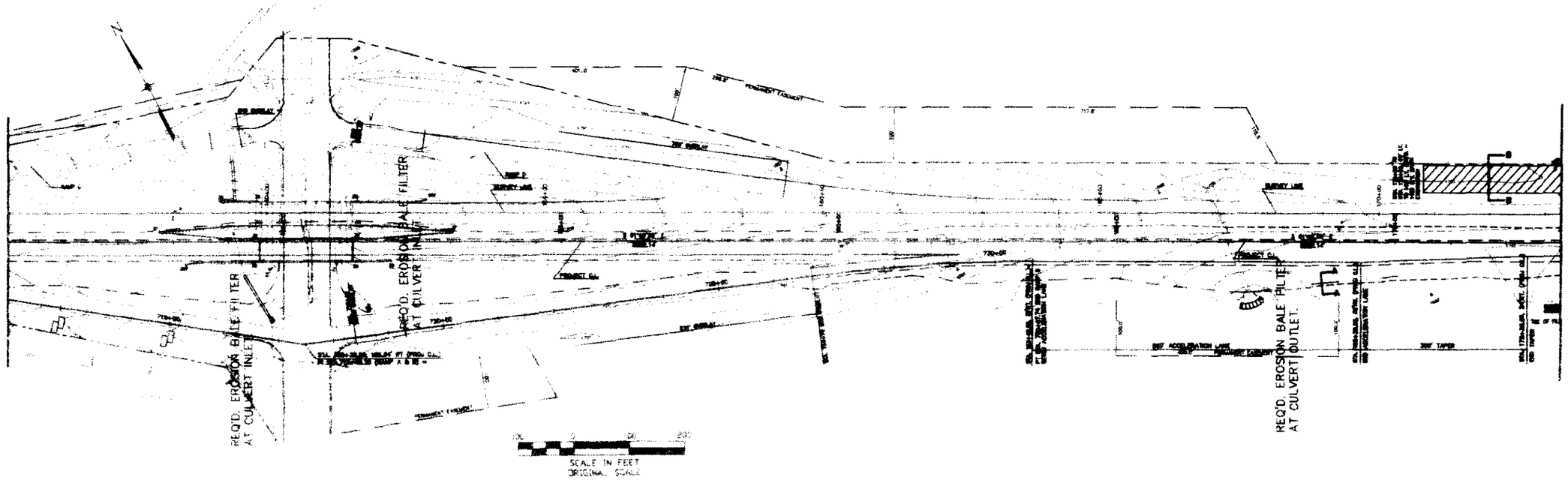

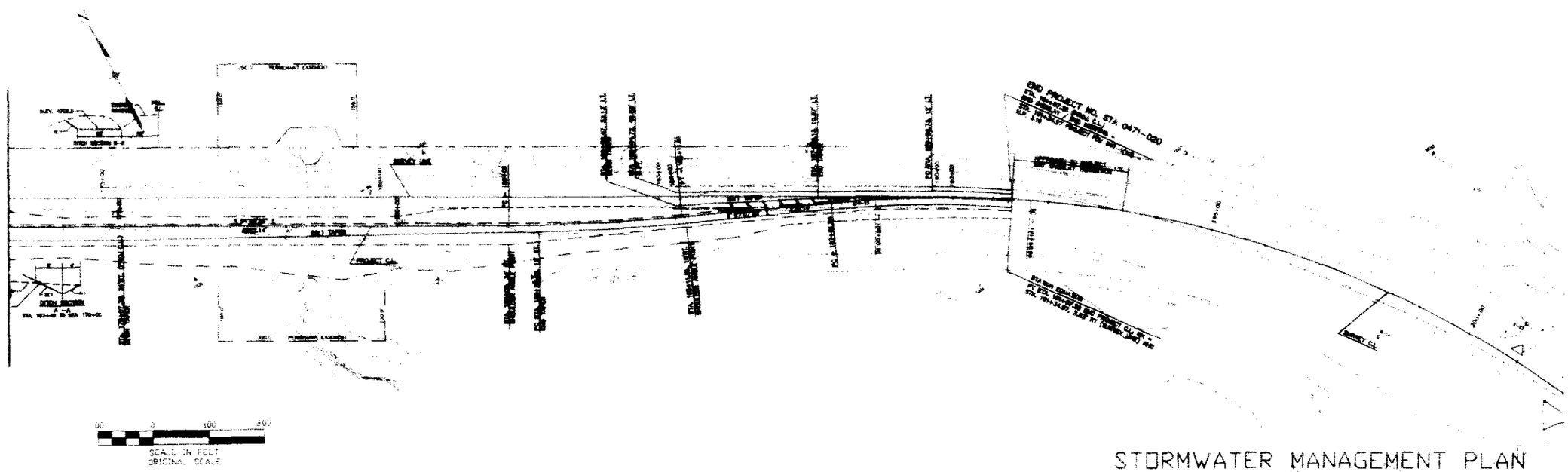

STORMWATER MANAGEMENT PLAN

INITIAL	DATE	
DESIGNED BY		
CHECKED BY		
DETAILED BY		
CHECKED BY		
QUANTITIES BY		
CHECKED BY		

AS CONSTRUCTED

NO REVISIONS ☐ REVISED ☐ VOID ☐

FED. ROAD REGION	DIVISION	PROJ. NO.	SHEET NO.	SHEET TOTALS
VIII	COLO.	STA-0471-020	75	

TABULATION OF SIGNS

SIGN NO.	SIGN CODE	STATION	SIGN PANEL SIZE	BACK-GROUND COLOR	REMOVE GROUND SIGN (EACH)	RESET GROUND SIGN (EACH)	NO OF POSTS	RESET FLASHING BEACON (EACH)	LENGTH OF POST	POST TYPE (LIN. FT.) 4 x 4 TIMBER	6 x 6 TIMBER	W6x12 BEAM	W8x15 BEAM	W8x18 BEAM	W8x21 BEAM	W10x22 BEAM	W10x25 BEAM	W12x26 BEAM	W12x40 BEAM	U-2	CONC FOOTING TYPE (EACH) 1	2	3	SIGN PANEL (SQ. FT.) CLASS I	CLASS II	CLASS III
1		68+35 RT				1																				
2		71+17 LT			1																					
3		71+17 LT				1																				
4		71+82 RT			1																					
5		71+91 RT			1																					
6		74+00 LT			1																					
7		74+00 LT																								
8		74+15 LT			1																					
9	12D10-4(1)	75+78 RT	12"x24"	GREEN			1		9'-0"										9.0						2.0
10	12D10-4(1)	75+78 RT	12"x24"	GREEN			1		9'-0"										9.0						2.0
11		77+00 LT				1																				
12	SPECIAL	78+40 LT	132"x84"	GREEN			2		15'-6"/14'-6"				30.0								2					77.0
13		79+80 LT				1																				
14		80+60 LT						1																		
15		89+50 LT			1																					
16a	36M1-6A(47)	93+19 RT	36"x36"	WHITE			1		15'-6"		15.5													9.0		
16b	30M3-2		30"x15"	WHITE																				3.13		
17		102+05 LT				1																				
18	SPECIAL	115+00 LT	144"x108"	GREEN			2		16'-0"/18'-0"					34.0								2				108.0
19a	36M1-6A(47)	121+00 LT	36"x36"	WHITE			1		15'-6"		15.5													9.0		
19b	30M3-4		30"x15"	WHITE																				3.13		
20	36R2-1(55)	118+60 LT	36"x48"	WHITE			1		17'-6"		17.5													12.0		
21		119+05 RT																								
22		127+50 RT																								
23	12D10-4(2)	128+58 LT	12"x24"	GREEN			1		9'-0"										9.0						2.0
24	12D10-4(2)	128+58 RT	12"x24"	GREEN			1		9'-0"										9.0						2.0
25	SPECIAL	132+35 RT	132"x60"	GREEN			2		14'-6"/16'-6"			31.0								2					55.0
26		132+85 LT			1																					
27		137+95 RT				1																				
28		139+25 RT			1																					
29	SPECIAL	142+10 RT	60"x48"	GREEN			1		17'-6"		17.5															20.0
30		142+98 LT			1																					
31		144+40 LT			1																					
32		144+40 LT			1																					
33	36W4-1	156+50 RT	36"x36"	YELLOW			1		17'-0"		17.0													9.0		
34	36W9-1(R)	158+00 RT	36"x36"	YELLOW			1		17'-0"		17.0													9.0		
35	36W9-1(R)	158+00 LT	36"x36"	YELLOW			1		17'-0"		17.0													9.0		
36		159+60 LT			1																					
37	36W9-2(L)	165+10 LT	36"x36"	YELLOW			1		17'-0"		17.0													9.0		
38	36W9-2(L)	165+10 RT	36"x36"	YELLOW			1		17'-0"		17.0													9.0		
39	SPECIAL	167+80 LT	132"x60"	GREEN			2		15'-0"/13'-6"			28.5								2					55.0
40	36W4-2(R)	172+00 LT	36"x36"	YELLOW			1		17'-0"		17.0													9.0		
41	36W4-2(R)	172+00 RT	36"x36"	YELLOW			1		17'-0"		17.0													9.0		
42		173+00 RT				1																				
43	36R2-1(55)	174+40 RT	36"x48"	WHITE			1		17'-6"		17.5													12.0		
44	12D10-4(3)	181+38 RT	12"x24"	GREEN			1		9'-0"										9.0						2.0
45	12D10-4(3)	181+38 LT	12"x24"	GREEN			1		9'-0"										9.0						2.0
46	120M-3(R)	183+00 RT	12"x36"	YELLOW					10'-0"										10.0				3.0			
47	120M-3(R)	184+50 RT	12"x36"	YELLOW					10'-0"										10.0				3.0			
48	120M-3(R)	186+00 RT	12"x36"	YELLOW					10'-0"										10.0				3.0			
49	SPECIAL	■ 193+00 LT	156"x60"	GREEN			2		12'-0"/14'-0"				26.0								2					65.0
50	36R4-1	■ 209+00 LT	36"x48"	WHITE			1		17'-6"		17.5													12.0		
		■ SURVEY LINE STATIONING																								
		PROJECT TOTALS			12	9		1			220.0	59.5	56.0	34.0					84.0	4	4	2	9.0	123.3	392.0

AS CONSTRUCTED		FED. ROAD REGION	DIVISION	PROJ. NO.	SHEET NO.
NO REVISIONS ☐ REVISED ☐ VOID ☐		VIII	COLO.	STA 0471-020	76

TABULATION OF PAVEMENT MARKINGS

STATION (PROJECT ℄)	LOCATION	PAVEMENT MARKING LINES (LINEAR FEET)									(SQUARE FEET)	
		▲ EDGE		● LANE	● CENTER		● CHANNELIZING		● CROSSHATCH		▼ ARROW	● STOP
		WHITE SOLID 4 INCH	YELLOW SOLID 4 INCH	WHITE BROKEN 4 INCH	YELLOW SOLID 4 INCH	YELLOW SKIP 4 INCH	WHITE SOLID 8 INCH	YELLOW SOLID 8 INCH	WHITE SOLID 8 INCH	YELLOW SOLID 8 INCH	WHITE	WHITE SOLID 24 INCH
67+00 TO 75+95	EB	895	895	220								
302+00 TO 306+30	EB J. MURPHY RAMP	430	430									
70+50 TO 72+80	WB	230	230	60								
72+80 TO 75+00	WB		222	60			220					
67+00 TO 72+80	WB J. MURPHY RAMP	600	580				130					30
72+80 TO 75+00	WB J. MURPHY RAMP	220					220					
306+30 TO 309+50	EB J. MURPHY RAMP	320					320					
75+95 TO 79+50	EB	355	355	180								
75+00 TO 131+10	WB	5610	5610	1400								
79+50 TO 136+42	EB	5690	5690	1420								
131+10 TO 138+30	WB	720	720	360								
136+42 TO 142+10	EB		568	140			568					
703+42 TO 709+10	EB TROY OFF RAMP	568					568					
136+30 TO 158+45	WB	2015	2015	500								
138+30 TO 142+60	WB TROY ON RAMP	430					430					
142+10 TO 163+50	EB	2140	2140	540							42	
709+10 TO [illegible]	EB TROY OFF RAMP	190	190									
142+60 TO 150+00	WB TROY ON RAMP	740	740									
158+45 TO 161+72	WB		327	80			327					
150+80 TO 158+45	WB TROY OFF RAMP	765	765				730					30
723+90 TO 726+70	EB TROY ON RAMP	280	280									
158+45 TO 161+72	WB TROY OFF RAMP	327					327					
726+70 TO 730+40	EB TROY ON RAMP	370					370					
161+72 TO 183+72	WB	2200	2200	550								
163+50 TO 165+50	EB	200	200	100								
165+50 TO 171+80	EB	630	630	160							42	
171+80 TO 185+10	EB	1330	1330								42	
183+72 TO 188+60	WB	486						495		250		
185+10 TO 188+60	EB	350						350				
■ 188+89 TO 201+25	EB & WB	2750			2672		250					
■ 201+30	GOODYEAR MESA RD				420							30
■ 201+55 TO 204+60	EB & WB	1020			610		190					
■ 204+60 TO 209+00	EB & WB	880			440	110						
PAVEMENT MARKING TOTAL (LF)		32,743	28,117	5,770	3,942	110	4,050	845		250		90
PAVEMENT MARKING TOTAL (SF)		10,915	8,705	1,925	1,315	40	2,700	565		170	126	180

▲ THERMOPLASTIC PAVEMENT MARKING
● PREFORMED PLASTIC PAVEMENT MARKING (60 MILS)
▼ PREFORMED THERMOPLASTIC PAVEMENT MARKING
■ SURVEY LINE STATIONING

SUMMARY OF PAVEMENT MARKING QUANTITIES

COLOR	PAINT (GAL.)	THERMOPLASTIC (SQ. FT.)	PREFORMED THERMOPLASTIC (SQ. FT.)(WORD/SYMBOL)	PREFORMED PLASTIC (SQ. FT.)(60 MIL.) LANE/CENTER	PREFORMED PLASTIC (SQ. FT.)(60 MIL.) STOP/X-WALK
YELLOW		8,705		2,090	
WHITE		10,915	126	4,625	180
TOTAL		19,620	126	6,715	180

NOTE:
FOR DETAILS OF PAVEMENT MARKING LINES, SYMBOLS AND PLACEMENT, SEE STANDARD NO. S-627-1 EXCEPT AS CALLED OUT ON THE PLANS

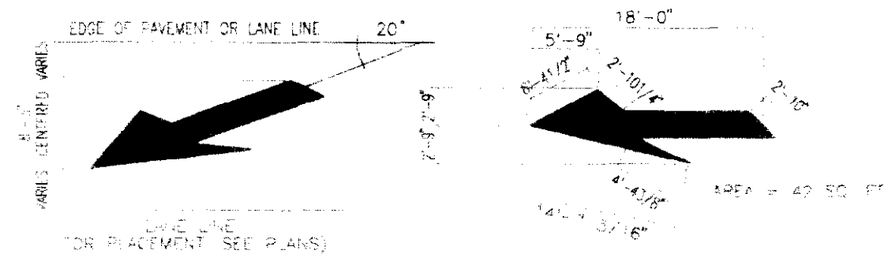

OBLIQUE ARROW PAVEMENT MARKING DETAIL

STATE OF COLORADO
STATE DEPARTMENT OF HIGHWAYS
DIVISION OF HIGHWAYS
D. O. H. FORM NO. 128
REV. FEB. 1984

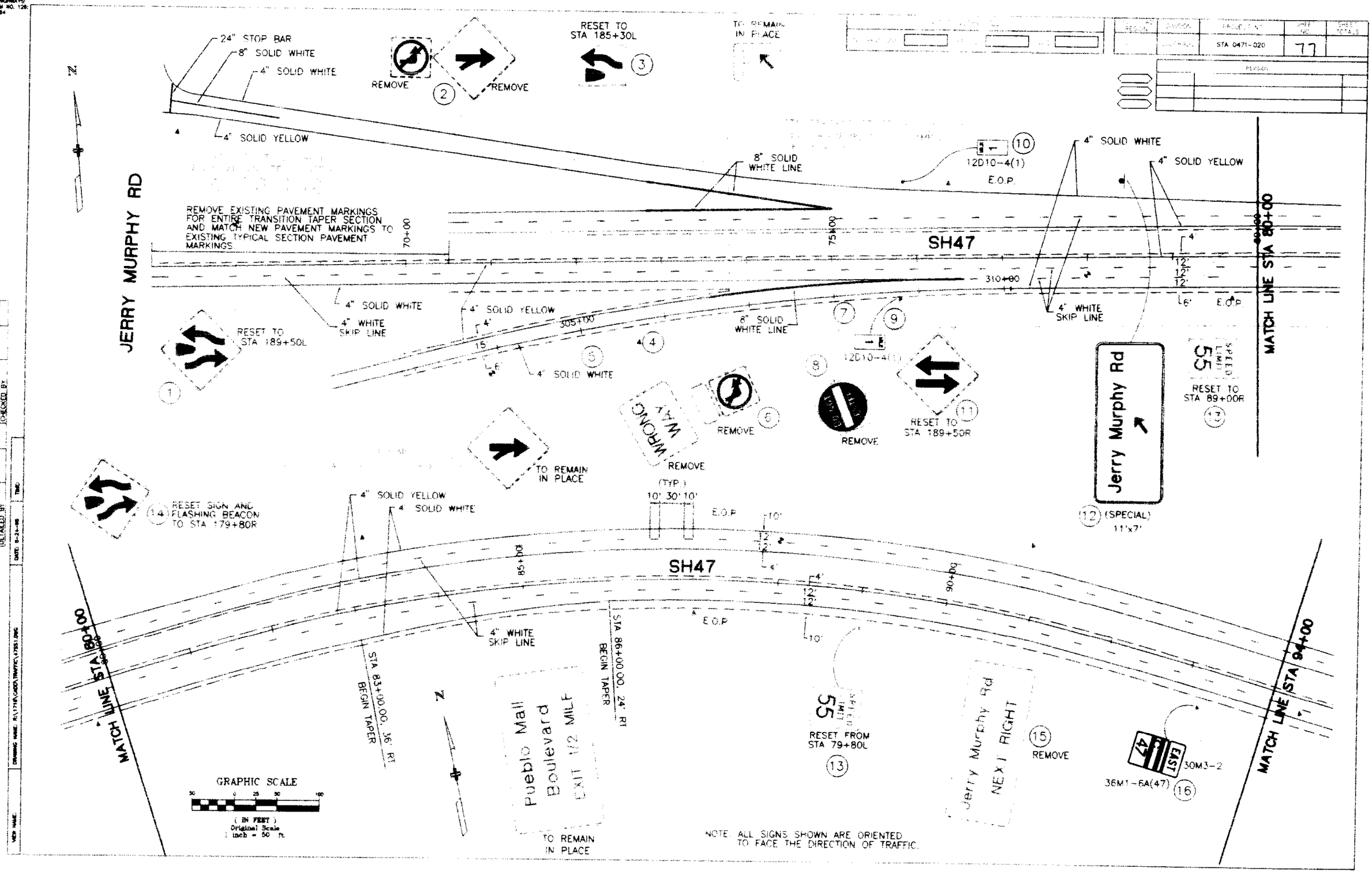

REGION	DIVISION	PROJECT NO.	SITE NO.	SHEET TOTALS
		STA 0471-020	77	

REVISION

INITIAL | DATE | CHECKED BY | QUANTITIES BY | CHECKED BY

DESIGNED BY | CHECKED BY | DETAILED BY | TMC | DATE: 9-23-98

DRAWING NAME: R:\1718\CADD\TRAFFIC\47351.DWG

VIEW NAME:

SIGNING AND STRIPING

STATE OF COLORADO
STATE DEPARTMENT OF HIGHWAYS
DIVISION OF HIGHWAYS
S. O. H. FORM NO. 126.
REV. FEB 1984

DIVISION	PROJECT NO.	SHEET NO.	SHEET TOTALS
	STA 0471-020	78	

REVISIONS

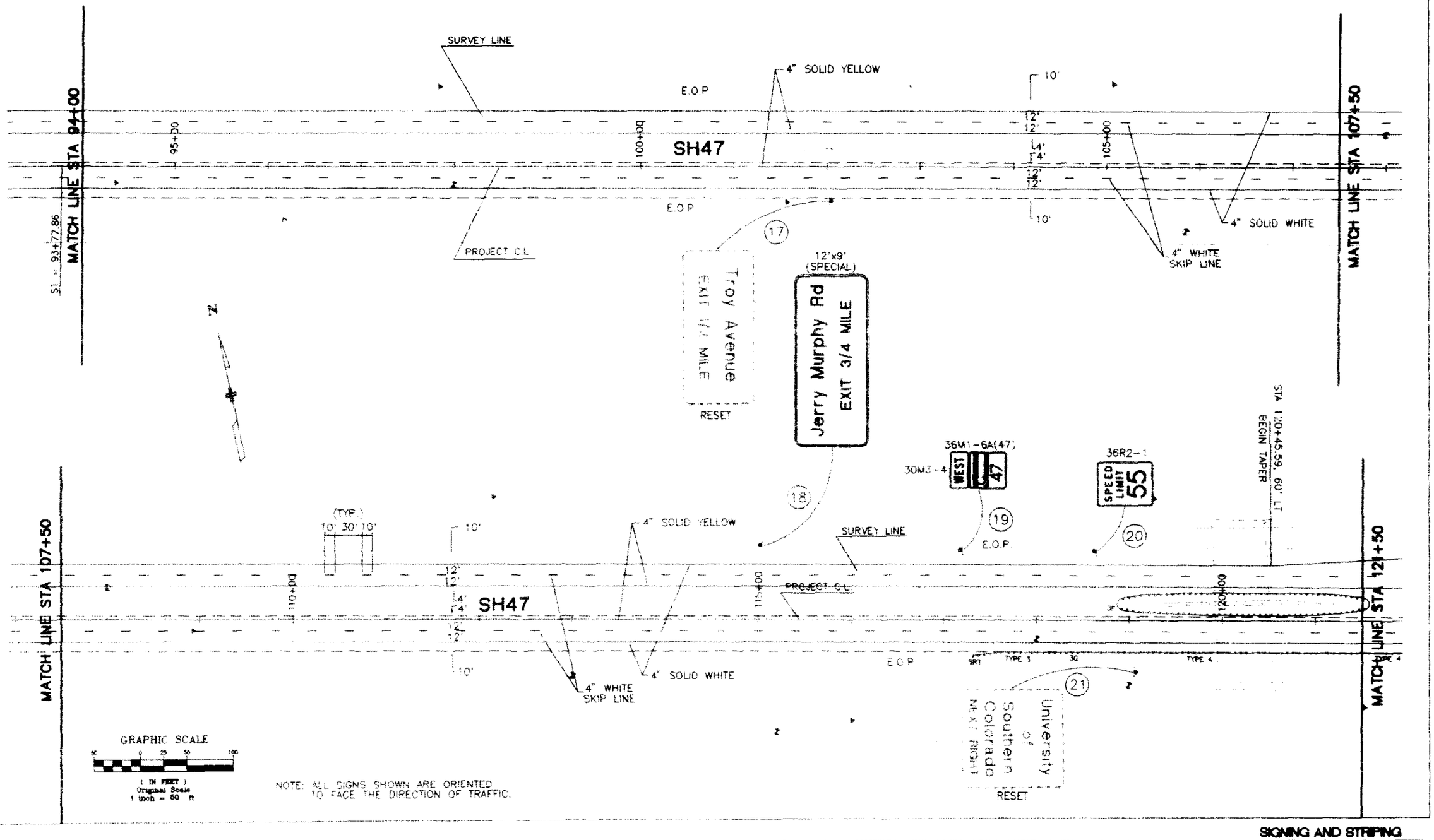

NOTE: ALL SIGNS SHOWN ARE ORIENTED TO FACE THE DIRECTION OF TRAFFIC.

DESIGNED BY
CHECKED BY
DETAILED BY
DATE: 8-24-99
TIME
DRAWING NAME: R:\1718\CADD\TRAFFIC\17S62.DWG
VIEW NAME
INITIAL
DATE
CHECKED BY
QUANTITIES BY
CHECKED BY

SIGNING AND STRIPING

STATE OF COLORADO
STATE DEPARTMENT OF HIGHWAYS
DIVISION OF HIGHWAYS
D. O. H. FORM NO 128
REV. FEB. 1964

NOTE: ALL SIGNS SHOWN ARE ORIENTED TO FACE THE DIRECTION OF TRAFFIC

PROJECT NO.	SHEET NO.	SHEET TOTALS
STA 0471-020	79	

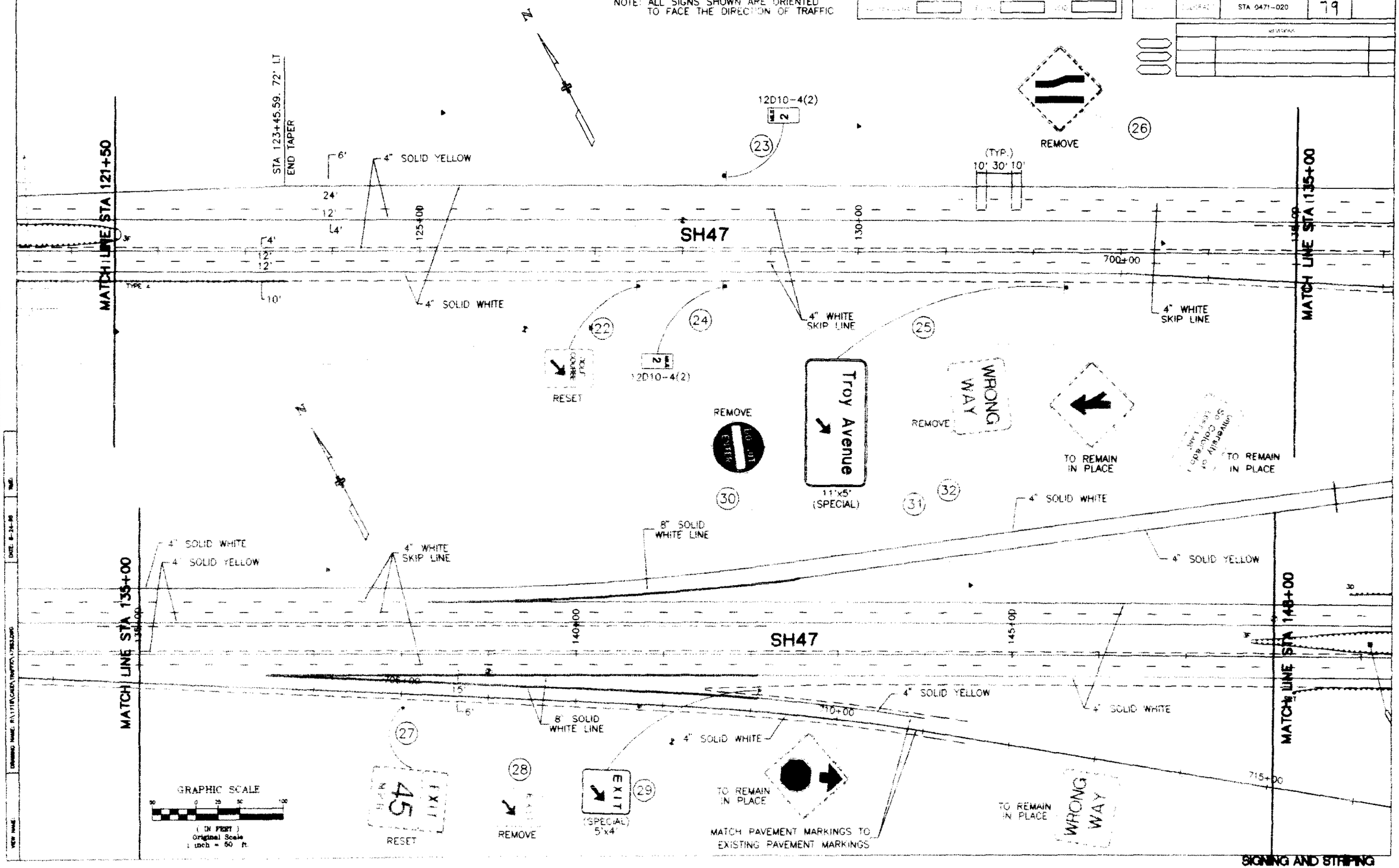

SIGNING AND STRIPING

	INITIAL	DATE
DESIGNED BY		
CHECKED BY		
DETAILED BY		
CHECKED BY		
QUANTITIES BY		
CHECKED BY		

DATE: 8-24-99
DRAWING NAME: R:\1118\CADD\TRAFFIC\1783.DWG
VIEW NAME:

STATE OF COLORADO
STATE DEPARTMENT OF HIGHWAYS
DIVISION OF HIGHWAYS
D. O. H. FORM NO. 128
REV. FEB. 1984

PROJECT NO.	SHEET NO.	SHEET TOTAL
STA 0471-020	80	

REVISIONS

NOTE: ALL SIGNS SHOWN ARE ORIENTED TO FACE THE DIRECTION OF TRAFFIC

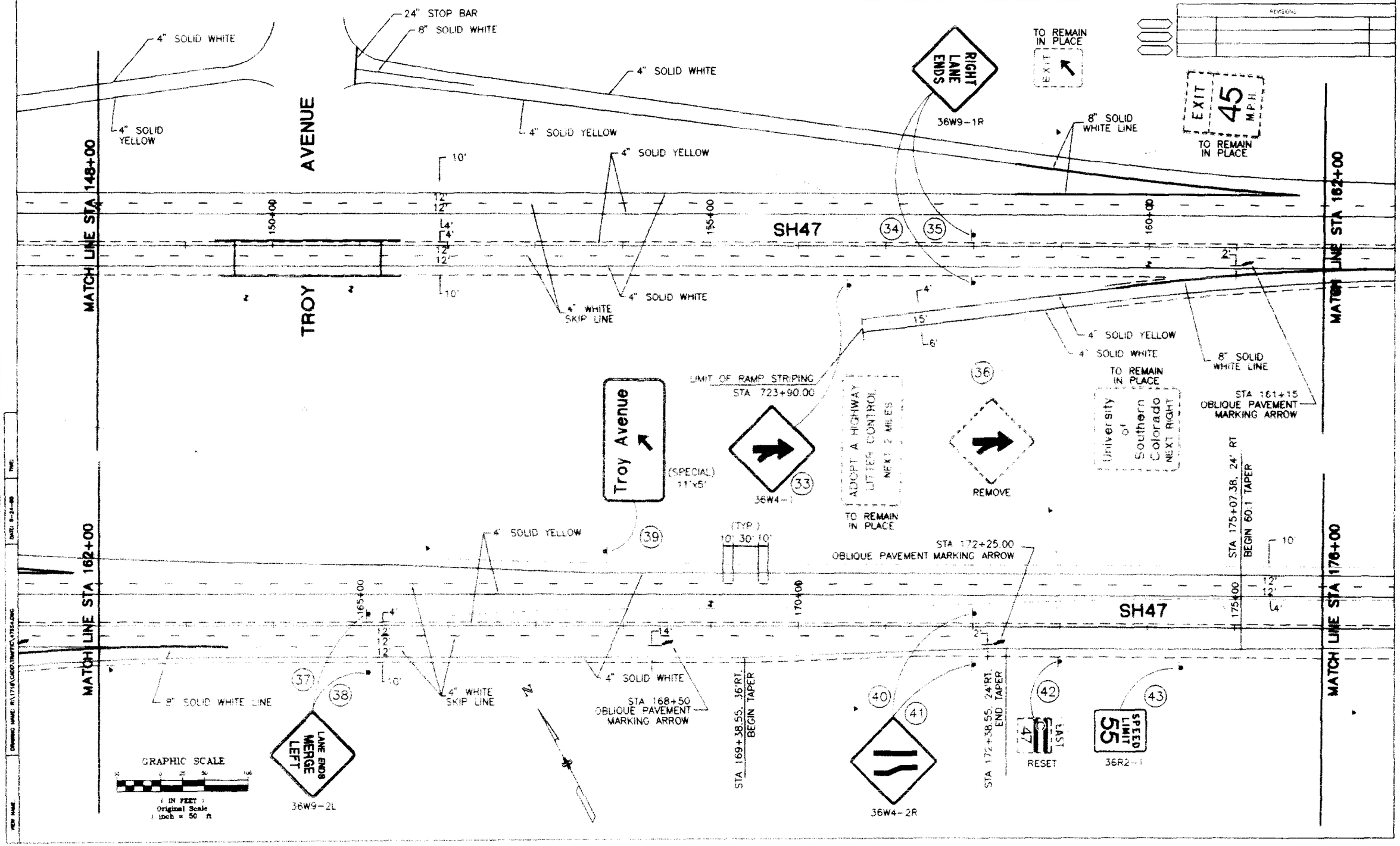

SIGNING AND STRIPING

STATE OF COLORADO
STATE DEPARTMENT OF HIGHWAYS
DIVISION OF HIGHWAYS
D. O. H. FORM NO. 128
REV. FEB. 1964

PROJECT NO.	SHEET NO.	SHEET TOTALS
STA 0471-020	81	

REVISIONS

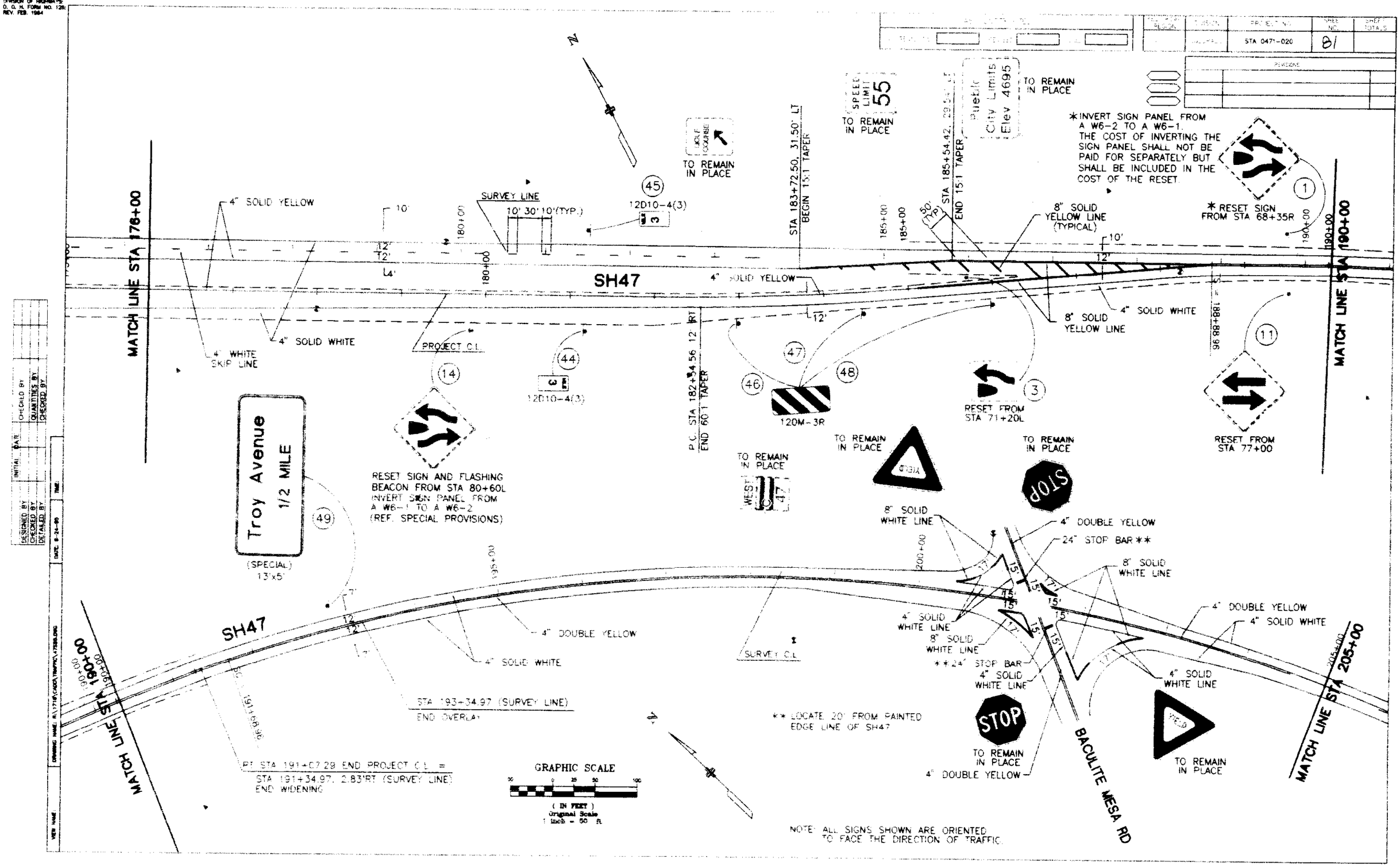

DESIGNED BY
CHECKED BY
DETAILED BY
QUANTITIES BY
CHECKED BY
DATE 8-24-89
TIME
DRAWING NAME: R:\1716\CADD\TRAFFIC\47S8LDNG
VIEW NAME

SIGNING AND STRIPING

STATE OF COLORADO
STATE DEPARTMENT OF HIGHWAYS
DIVISION OF HIGHWAYS:
D. O. H. FORM NO. 128
REV. FEB. 1984

NOTE: ALL SIGNS SHOWN ARE ORIENTED TO FACE THE DIRECTION OF TRAFFIC.

REGION	DIVISION	PROJECT NO.	SHEET NO.	SHEET TOTAL
		STA 047-020	82	

REVISIONS

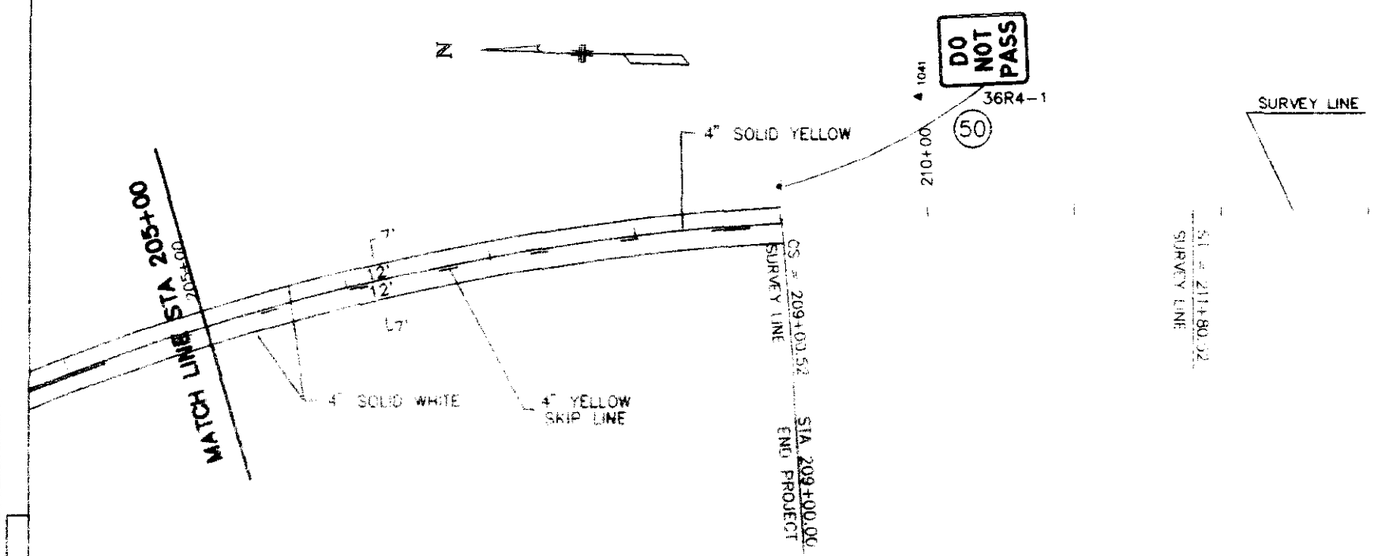

	INITIAL	DATE
DESIGNED BY		
CHECKED BY		
DETAILED BY		
QUANTITIES BY		
CHECKED BY		

VIEW NAME:
DRAWING NAME: R:\17MR\CADD\TRAFFIC\17SH.DWG
DATE: 8-23-88
TMP

SIGNING AND STRIPING

STATE OF COLORADO
STATE DEPARTMENT OF HIGHWAYS
DIVISION OF HIGHWAYS
D. O. H. FORM NO. 126
REV. FEB. 1984

PROJECT NUMBER	PHASE	PROJECT NO.	SHEET NO.	SHEET TOTALS
		STA 0471-020	83	

REVISIONS

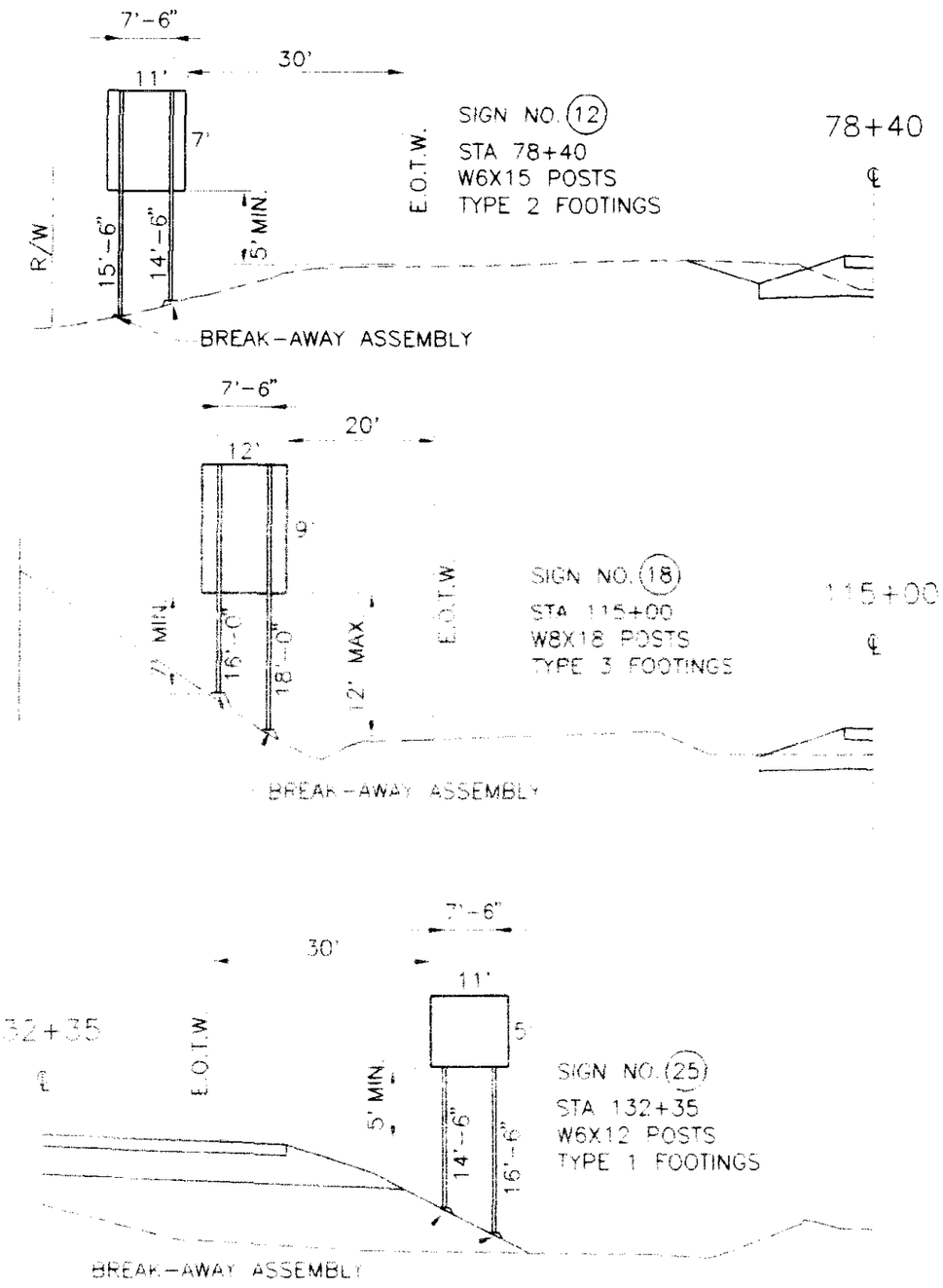

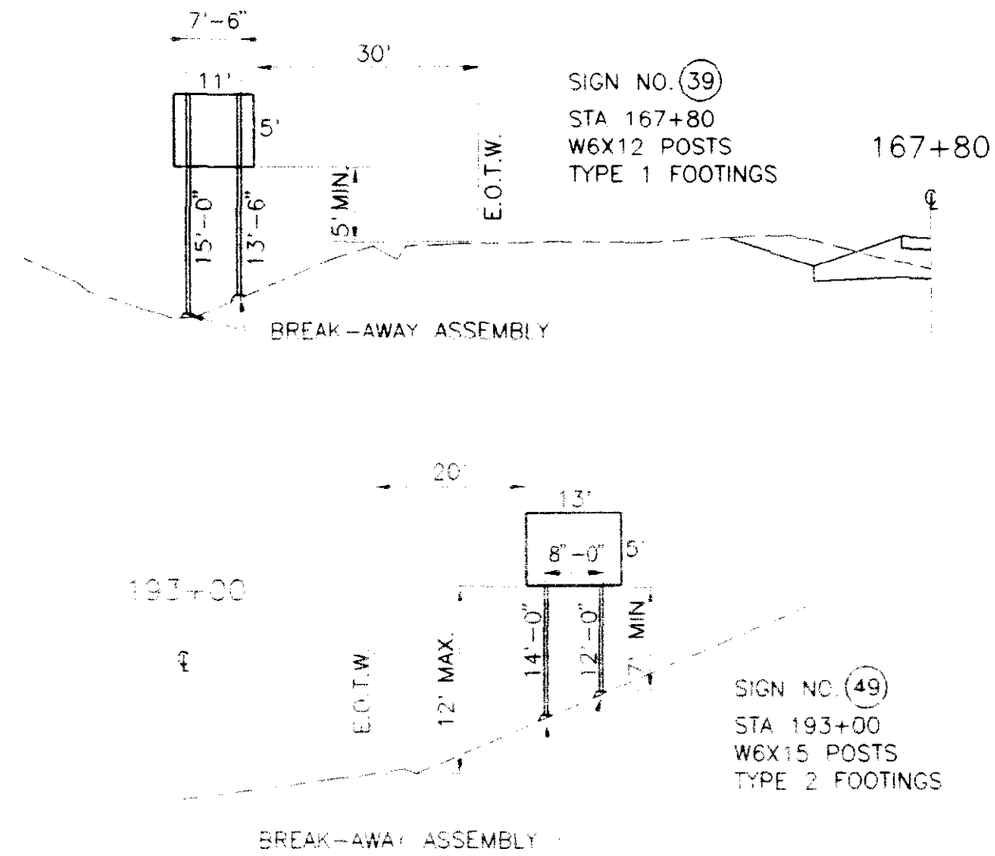

ORIGINAL SCALE
1" = 10' HORIZONTAL
1" = 5' VERTICAL

CLASS II SIGN LOCATION DETAILS

	INITIAL	DATE	CHECKED BY
DESIGNED BY			QUANTITIES BY
CHECKED BY			CHECKED BY
DETAILED BY			

DATE 8-24-98 TMF

DRAWING NAME R:\171R\CADD\TRAFFIC\SIGNDET.DWG

VIEW NAME

TABULATION OF TRAFFIC ENGINEERING ITEMS

ITEM	DESCRIPTION	UNIT	TOTAL
202	REMOVAL OF PAVEMENT MARKING	SQ. FT.	3000
202	REMOVAL GROUND SIGN	EA.	12
210	RESET GROUND SIGN	EA.	9
210	RESET FLASHING BEACON	EA.	1
612	DELINEATOR (FLEXIBLE)(TYPE I)	EA.	199
612	DELINEATOR (FLEXIBLE)(TYPE II)	EA.	100
612	DELINEATOR (FLEXIBLE)(TYPE III)	EA.	8
614	SIGN PANEL (CLASS I)	SQ. FT.	9
614	SIGN PANEL (CLASS II)	SQ. FT.	123
614	SIGN PANEL (CLASS III)	SQ. FT.	392
614	TIMBER SIGN POST (6x6)	LIN. FT.	220
614	STEEL SIGN POST (U-2)	LIN. FT.	84
614	STEEL SIGN POST (W 6X12)	LIN. FT.	60
614	STEEL SIGN POST (W 6X15)	LIN. FT.	56
614	STEEL SIGN POST (W 8X18)	LIN. FT.	34
614	CONCRETE FOOTING (TYPE 1)	EA.	4
614	CONCRETE FOOTING (TYPE 2)	EA.	4
614	CONCRETE FOOTING (TYPE 3)	EA.	2
627	PAVEMENT MARKING PAINT	GAL.	220
627	THERMOPLASTIC PAVEMENT MARKING	SQ. FT.	19,620
627	PREFORMED PLASTIC PAVEMENT MARKING (60 MILS)	SQ. FT.	6,715
627	PREFORMED PLASTIC PAVEMENT MARKING (60 MILS) (XWALK - STOP LINE)	SQ. FT.	180
627	PREFORMED THERMOPLASTIC PAVEMENT MARKING (WORD - SYMBOL)	SQ. FT.	126
630	FLAGGING	HOUR	4,000
630	TRAFFIC CONTROL SUPERVISOR	DAY	170
630	TRAFFIC CONTROL INSPECTION	DAY	100
630	BARRICADE (3M-B)(TEMP)	EA.	9
630	CONST TRAF SIGN (A)	EA.	29
630	CONST TRAF SIGN (B)	EA.	60
630	FLASHING ARROW PANEL (C TYPE)	EA.	2
630	DRUM CHANNELIZING DEVICE	EA.	300
630	CONCRETE BARRIER (TEMPORARY)	LIN. FT.	1,200
630	TRAFFIC CONE	EA.	200
630	IMPACT ATTENUATOR (SAND FILLED PLASTIC BARREL)(TEMPORARY)	EA.	2

SCHEDULE OF CONSTRUCTION TRAFFIC SIGNS

SIGN NO.	SIGN TEXT	SIZE	TYPE I	TYPE II	TYPE III
48G20-10	THANK YOU	48"x48"		4	
48M4-10()	DETOUR ARROW	48"x18"	2		
48R1-2	YIELD	36"x36"x36"	2		
36R2-1()	SPEED/LIMIT/XX	36"x48"		9	
36R4-1	DO/NOT/PASS	36"x48"		4	
24R4-7()	KEEP RIGHT SYMBOL	24"x36"	2		
36R5-1	DO NOT ENTER	36"x36"	6		
36R5-9	WRONG/WAY	36"x24"	6		
48R11-2	ROAD /CLOSED	48"x30"		4	
48W1-4()	REVERSE CURVE ARROW	48"x48"		3	
48W3-2a	YIELD AHEAD SYMBOL	48"x48"		2	
48W4-1()	MERGE SYMBOL	48"x48"		3	
48W4-2	LANE TRANSITION SYMBOL	48"x48"		4	
48W6-3	TWO-WAY TRAFFIC SYMBOL	48"x48"		2	
18W8-1	CHEVRON SYMBOL	18"x24"	6		
30W12-1	DOUBLE ARROW SYMBOL	30"x30"	1		
48W12-2	LOW CLEARANCE SYMBOL (14'-6")	48"x48"		4	
24W13-1	XX MPH	24"x24"	4		
48W13-2	EXIT/XX MPH	48"x60"		1	
*48W20-1	ROAD WORK AHEAD/DISTANCE	48"x48"		8	
48W20-4	ONE LANE /ROAD/DISTANCE	48"x48"		2	
48W20-5	LANE/CLOSED/DISTANCE	48"x48"		4	
48W20-7b	FLAGGER SYMBOL	48"x48"		6	
			29	60	

*CONSTRUCT FROM DIAMOND GRADE SHEETING

TABULATION OF DELINEATORS

LOCATION	DESCRIPTION	TYPE I (RETAINED)	TYPE I (NEW)	TYPE II (RETAINED)	TYPE III (RETAINED)
STA 70+50.00 TO STA 77+10.14	TANGENT	3	6	3	
STA 302+00.00 TO STA 310+07.76	J. MURPHY ON RAMP	6		4	
STA 77+10.14 TO STA 79+55.64	TANGENT		2	4	
STA 79+55.64 TO STA 93+77.86	3'00' CURVE	9	18	16	
STA 85+25.00 RT	CULVERT		1		
STA 91+10.00 RT	CULVERT		1		
STA 93+77.86 TO STA 117+30.00	TANGENT	10	10		
STA 117+30.00 TO STA 123+50.00	BRIDGE ABUTMENT	34	14		
STA 123+50.00 TO STA 133+00.00	TANGENT	2	4	11	
STA 700+00.00 TO STA 711+00.00	TROY AVE OFF RAMP	1		12	
STA 133+00.00 TO STA 147+75.00	TANGENT	3	6	9	
STA 147+75.00 TO STA 153+08.00	BRIDGE GUARDRAIL	11	28		8
STA 153+08.00 TO STA 175+07.38	TANGENT	5	8	18	
STA 717+48.35 TO STA 727+38.76	TROY AVE ON RAMP	9		5	
STA 175+07.38 TO STA 191+07.29	LANE TRANSITION	4	4	18	
		97	102	100	8

STATE OF COLORADO
STATE DEPARTMENT OF HIGHWAYS
DIVISION OF HIGHWAYS
D. O. H. FORM NO. 128
REV. FEB. 1984

		STA 0471-020	85

PHASE 1

PHASE 1 WORK SHALL INCLUDE CONSTRUCTING THE PORTIONS OF EASTBOUND SH47 WHICH ARE CLEAR OF THE EXISTING SH47 TRAVELED WAY. EXISTING TRAFFIC FLOW SHALL BE MAINTAINED ON THE EXISTING SH47 ROADWAY INCLUDING RAMP JUNCTIONS AT JERRY MURPHY AND TROY AVENUE.

PHASE 1a SHALL INCLUDE ALL ROADWAY CONSTRUCTION ITEMS, WITH THE EXCEPTION OF THE FINAL LIFT OF ASPHALT, AND FOUDATION CONSTRUCTION FOR THE TROY AVENUE BRIDGE. CONSTRUCTION TRAFFIC CONTROL (NOT SHOWN) SHALL INCLUDE W20-1 SIGNS ("ROAD WORK / 1500 FT / AHEAD") AND G20-10 SIGNS ("THANK YOU") AT EACH END OF THE WORK ZONE AND AT RAMP JUNCTIONS. WORK WITHIN 30 FEET OF THE TRAVELED WAY SHALL BE DELINEATED WITH CHANNELIZING DEVICES SPACED AT 50 FT INTERVALS ALONG THE SOUTH SIDE OF THE EXISTING SH47 PAVEMENT EDGE. WHEN DIRECTED BY THE ENGINEER, THE CONTRACTOR SHALL PLACE **TEMPORARY CONCRETE BARRIER** (SEE NOTE 7) ALONG THE EXISTING TRAVELED WAY FOR WORK ZONE PROTECTION. BARRIER PLACEMENT, FLARE RATE, AND END TREATMENTS SHALL BE IN ACCORDANCE WITH STANDARD PLAN NO. S-630-1.

PHASE 1b SHALL INCLUDE CONSTRUCTION OF THE EASTBOUND TROY AVENUE BRIDGE SUPERSTRUCTURE. PHASE 1B WORK MAY BE COMPLETED CONCURRENTLY WITH PHASE 2 WORK BUT MUST BE COMPLETED PRIOR TO COMMENCEMENT OF PHASE 3. CONSTRUCTION TRAFFIC CONTROL SHALL BE AS SHOWN ON THE FOLLOWING PHASE 1b PLAN SHEET.

PHASE 2

PHASE 2 WORK SHALL INCLUDE CONSTRUCTION OF THE RAMP JUNCTION AND ROADWAY TRANSITION PORTIONS OF EASTBOUND SH47. THIS WORK SHALL EXCLUDE PLACEMENT OF THE FINAL ASPHALT LIFT UNTIL PHASE 4. BOTH DIRECTIONS OF MAINLINE SH47 TRAFFIC FLOW SHALL BE MAINTAINED ON THE EXISTING WESTBOUND ROADWAY AT THE RAMP JUNCTION AND TRANSITION AREAS. EXISTING TRAFFIC FLOW SHALL BE MAINTAINED THROUGH THE USE OF FLAGGING AND TEMPORARY ALIGNMENT SHIFTS WITHIN THE EXISTING AND NEWLY CONSTRUCTED PORTIONS OF SH47. APPROPRIATE LANE WIDTHS AND ALIGNMENT TAPERS SHALL BE USED TO ACCOMMODATE TRUCKS AND BUSES. FLAGGERS SHALL ALSO BE USED TO CONTROL RAMP AND MAINLINE TRAFFIC WHERE ADEQUATE SIGHT DISTANCE CANNOT BE MAINTAINED FOR MERGING TRAFFIC.

PHASE 3

PHASE 3 WORK SHALL INCLUDE CONSTRUCTION OF THE NORTH PORTIONS OF THE DRAINAGE CULVERTS BETWEEN JERRY MURPHY ROAD AND BONFORTE BLVD AND THE REHABILITATION OF THE EXISTING WESTBOUND SH47 BRIDGE OVER TROY AVENUE. EASTBOUND SH47 TRAFFIC SHALL BE PLACED ON THE NEW EASTBOUND SH47 ROADWAY WITH TEMPORARY STRIPING FOR DELINEATION. WESTBOUND SH47 TRAFFIC SHALL BE DETOURED ONTO THE NEW EASTBOUND BRIDGE OVER TROY AVENUE USING THE EXISTING EASTBOUND TROY AVENUE ON RAMP AS A **MEDIAN CROSSOVER.**
IT IS ANTICIPATED THAT SOME ASPHALT PAVEMENT WILL NEED TO BE PLACED AT MINOR GRADE DIFFERENCES BETWEEN THE NEW EASTBOUND TRAVEL LANES AND THE EXISTING RAMP CROSSOVER.
WESTBOUND TRAFFIC SHALL BE DETOURED BACK TO THE WESTBOUND ROADWAY IN ADVANCE OF WESTBOUND JERRY MURPHY OFF RAMP USING A TEMPORARY MEDIAN CROSSOVER DETOUR AS SHOWN IN THE PLANS. CONSTRUCTION OF THE TEMPORARY DETOURS SHALL BE PAID FOR AS **ITEM 621-DETOUR-S.Y.**
EASTBOUND AND WESTBOUND TRAFFIC SHALL BE RESTRICTED TO ONE LANE IN EACH DIRECTION THROUGH THE DETOUR.

PHASE 4

PHASE 4 WORK SHALL INCLUDE THE FINAL ASPHALT LIFT ON ALL NEW ROADWAY AND BRIDGE SECTIONS AND AN ASPHALT OVERLAY OF THE EXISTING ROADWAY AS SHOWN IN THE PLANS. EASTBOUND SH47 TRAFFIC SHALL BE MAINTAINED ON THE NEW EASTBOUND ROADWAY WHILE WESTBOUND TRAFFIC SHALL BE MAINTAINED ON THE EXISTING WESTBOUND ROADWAY. THE ASPHALT SHALL BE PLACED WHILE MAINTAINING AT LEAST ONE LANE OF TRAFFIC IN EACH DIRECTION. TRAFFIC CONTROL (NOT SHOWN) SHALL CONFORM TO CDOT STANDARD PLAN S-630-1 CASE X. DETOURING TRAFFIC WILL NOT BE PERMITTED.

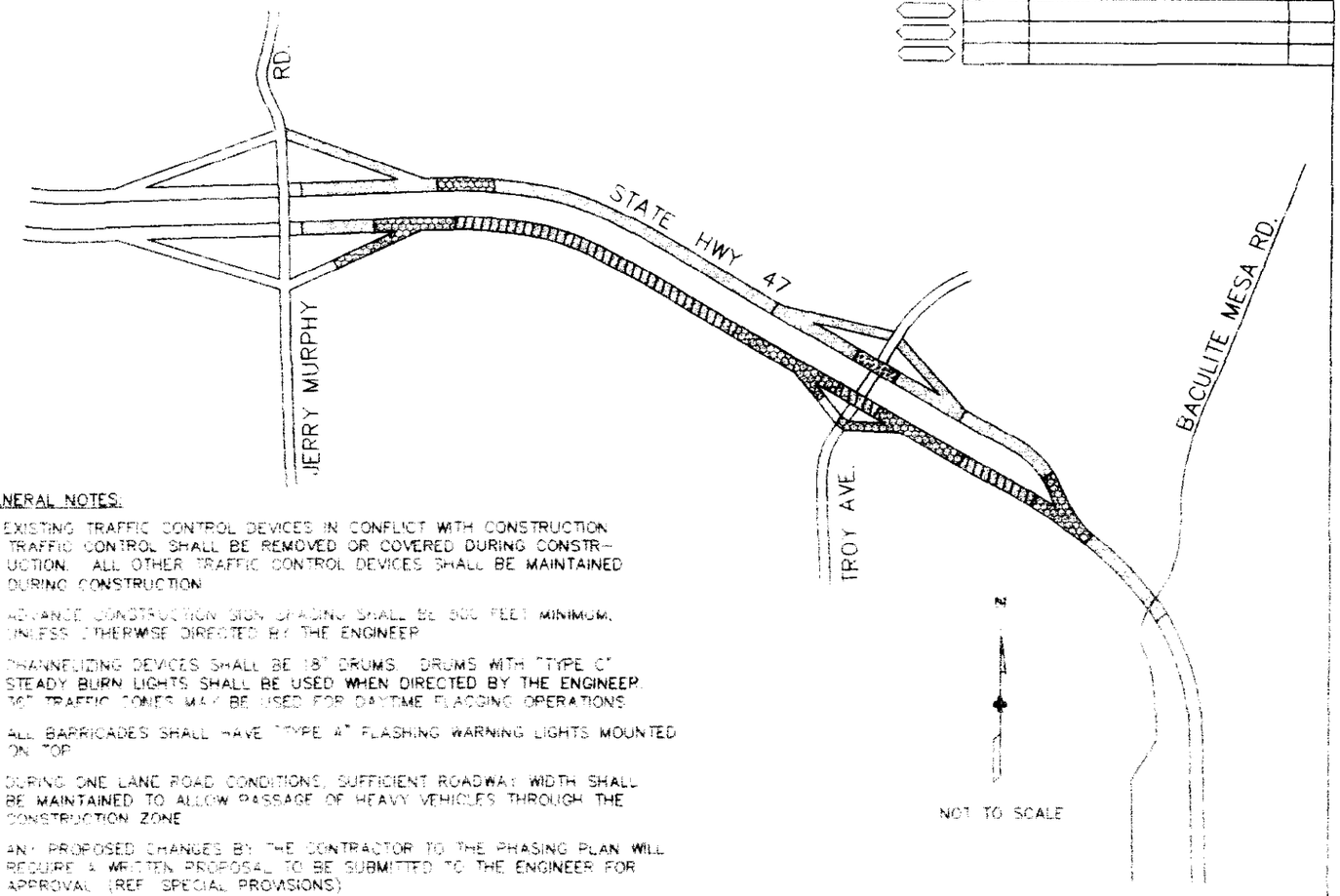

GENERAL NOTES:

1. EXISTING TRAFFIC CONTROL DEVICES IN CONFLICT WITH CONSTRUCTION TRAFFIC CONTROL SHALL BE REMOVED OR COVERED DURING CONSTRUCTION. ALL OTHER TRAFFIC CONTROL DEVICES SHALL BE MAINTAINED DURING CONSTRUCTION.
2. ADVANCE CONSTRUCTION SIGN SPACING SHALL BE 500 FEET MINIMUM, UNLESS OTHERWISE DIRECTED BY THE ENGINEER.
3. CHANNELIZING DEVICES SHALL BE 18" DRUMS. DRUMS WITH "TYPE C" STEADY BURN LIGHTS SHALL BE USED WHEN DIRECTED BY THE ENGINEER. 36" TRAFFIC CONES MAY BE USED FOR DAYTIME FLAGGING OPERATIONS.
4. ALL BARRICADES SHALL HAVE "TYPE A" FLASHING WARNING LIGHTS MOUNTED ON TOP.
5. DURING ONE LANE ROAD CONDITIONS, SUFFICIENT ROADWAY WIDTH SHALL BE MAINTAINED TO ALLOW PASSAGE OF HEAVY VEHICLES THROUGH THE CONSTRUCTION ZONE.
6. ANY PROPOSED CHANGES BY THE CONTRACTOR TO THE PHASING PLAN WILL REQUIRE A WRITTEN PROPOSAL TO BE SUBMITTED TO THE ENGINEER FOR APPROVAL. (REF. SPECIAL PROVISIONS)
7. IT IS ESTIMATED THAT **1200** FEET OF TEMPORARY CONCRETE BARRIER WILL BE REQUIRED DURING PHASE 1a TO PROTECT TRAFFIC ALONG EXISTING SH47 FROM EXCESSIVE CROSS SLOPES OR VERTICAL DROP-OFFS WITHIN THE CLEAR ZONE. THE FOLLOWING GUIDELINES ARE FOR THE ENGINEERS USE IN DETERMINING TEMPORARY BARRIER PLACEMENT.
THE GUIDELINES DO NOT ACCOUNT FOR EXTENUATING FIELD CONDITIONS WHICH MAY OR MAY NOT REQUIRE THE USE OF TEMPORARY BARRIER WITHIN THE 24 FT. CLEAR ZONE. TEMPORARY BARRIER IS RECOMMENDED FOR THE FOLLOWING CONDITIONS.
WHERE A VERTICAL DROP-OFF OF 2 FT. OR MORE EXISTS, OR
WHERE HEIGHT DIFFERENTIAL BETWEEN EDGE OF EXISTING PAVEMENT AND BOTTOM OF WORK AREA EQUALS 2-3 FT. AND SIDE SLOPE IS GREATER THAN 1 1/2:1, OR
WHERE HEIGHT DIFFERENTIAL BETWEEN EDGE OF EXISTING PAVEMENT AND BOTTOM OF WORK AREA EQUALS 4-6 FT. AND SIDE SLOPE IS GREATER THAN 2:1, OR
WHERE HEIGHT DIFFERENTIAL BETWEEN EDGE OF EXISTING PAVEMENT AND BOTTOM OF WORK AREA EQUALS 7-9 FT. AND SIDE SLOPE IS GREATER THAN 2 1/2:1, OR
WHERE HEIGHT DIFFERENTIAL BETWEEN EDGE OF EXISTING PAVEMENT AND BOTTOM OF WORK AREA IS GREATER THAN OR EQUAL TO 10 FT.

CONSTRUCTION TRAFFIC CONTROL PLAN

STATE OF COLORADO
STATE DEPARTMENT OF HIGHWAYS
DIVISION OF HIGHWAYS
D. O. H. FORM NO. 128
REV. FEB. 1984

		STA 0471-020	86	

CONSTRUCTION TRAFFIC CONTROL PLAN
PHASE 1b - SHEET 1

NOTE ALL SIGNS SHOWN ARE ORIENTED TO FACE THE DIRECTION OF TRAFFIC

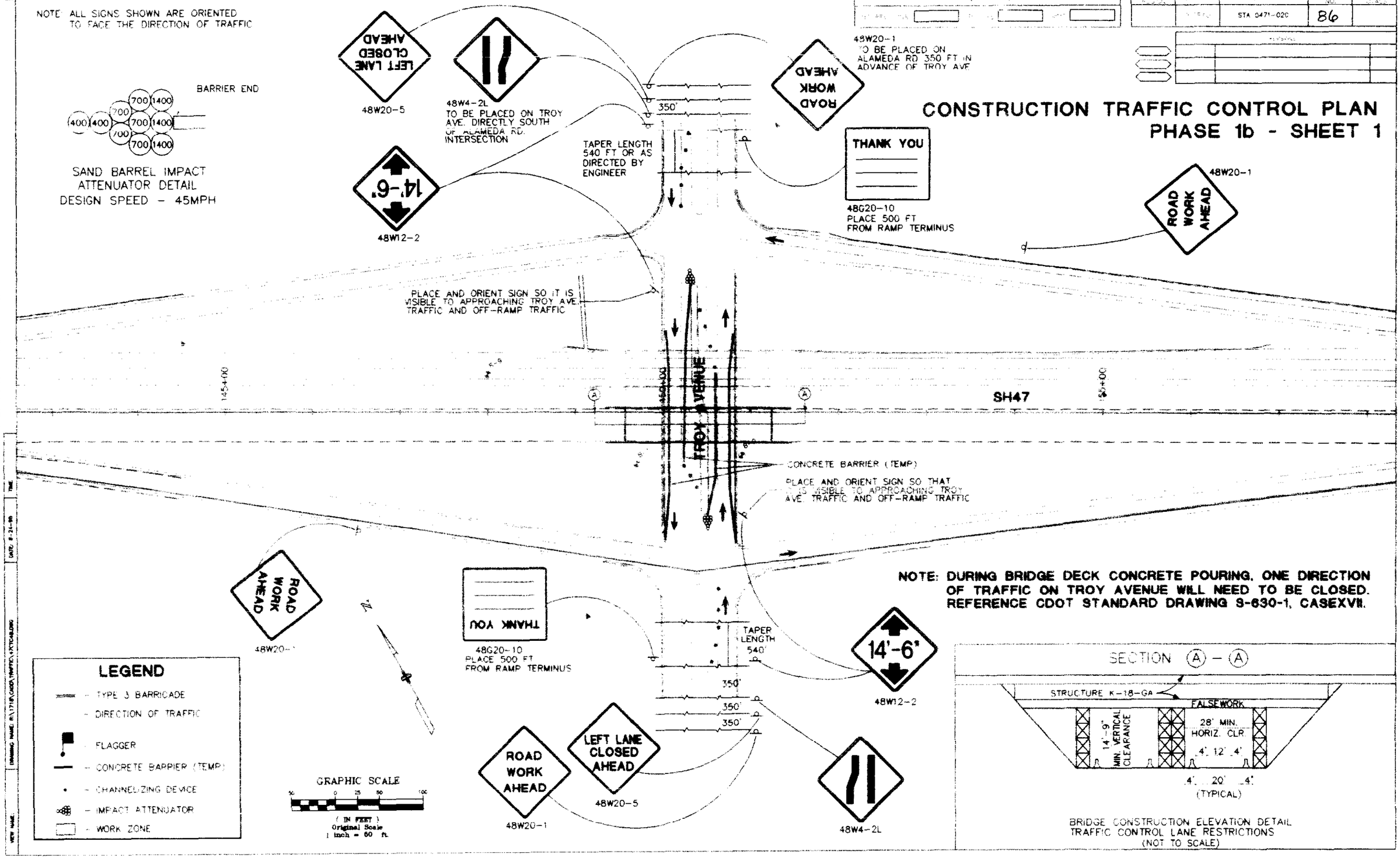

NOTE: DURING BRIDGE DECK CONCRETE POURING, ONE DIRECTION OF TRAFFIC ON TROY AVENUE WILL NEED TO BE CLOSED. REFERENCE CDOT STANDARD DRAWING S-630-1, CASEXVII.

DESIGNED BY
CHECKED BY
DETAILED BY
DATE 8-21-95
TIME
INITIAL
DATE
CHKD BY
QUANTITIES BY
CHECKED BY
DRAWING NAME: R:\171R\CADD\TRAFFIC\XTCA8.DGN
VIEW NAME:

STATE OF COLORADO
STATE DEPARTMENT OF HIGHWAYS
DIVISION OF HIGHWAYS
D. O. H. FORM NO. 128
REV. FEB. 1964

			STA 0471-020	87	

PHASE 2 - SHEET 1

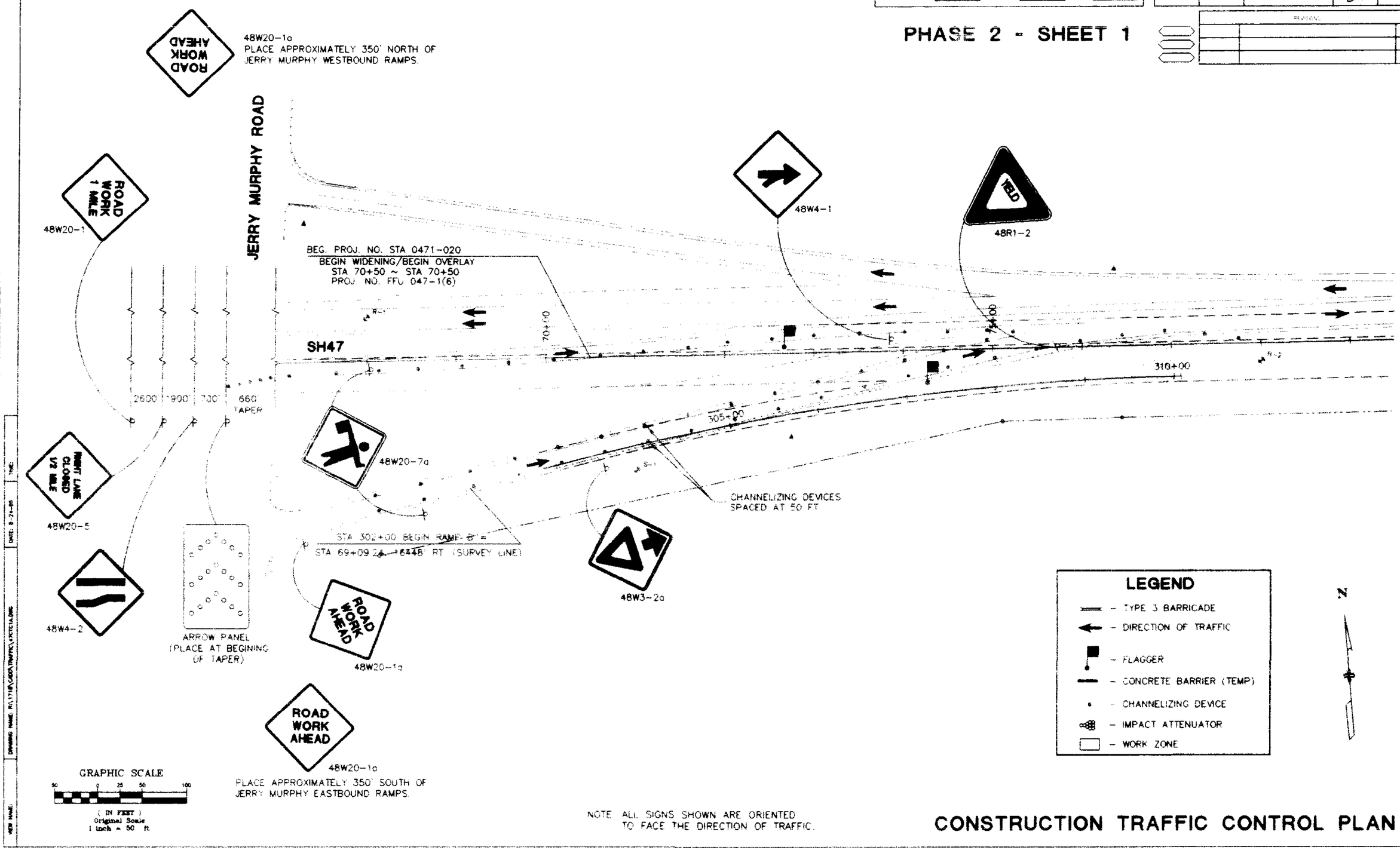

NOTE ALL SIGNS SHOWN ARE ORIENTED
TO FACE THE DIRECTION OF TRAFFIC.

CONSTRUCTION TRAFFIC CONTROL PLAN

DESIGNED BY	INITIAL	DATE
CHECKED BY		
DETAILED BY		
DATE: 8-24-95	TIME:	
DRAWING NAME: R:\1718\CADD\TRAFFIC\4-PCTC1A.DWG		
VIEW NAME:		
QUANTITIES BY		
CHECKED BY		

STATE OF COLORADO
STATE DEPARTMENT OF HIGHWAYS
DIVISION OF HIGHWAYS
D. O. H. FORM NO. 128
REV. FEB. 1964

PROJECT NO.	SHEET NO.	SHEET TOTALS
STA 0471-020	88	

REVISIONS

PHASE 2 - SHEET 2

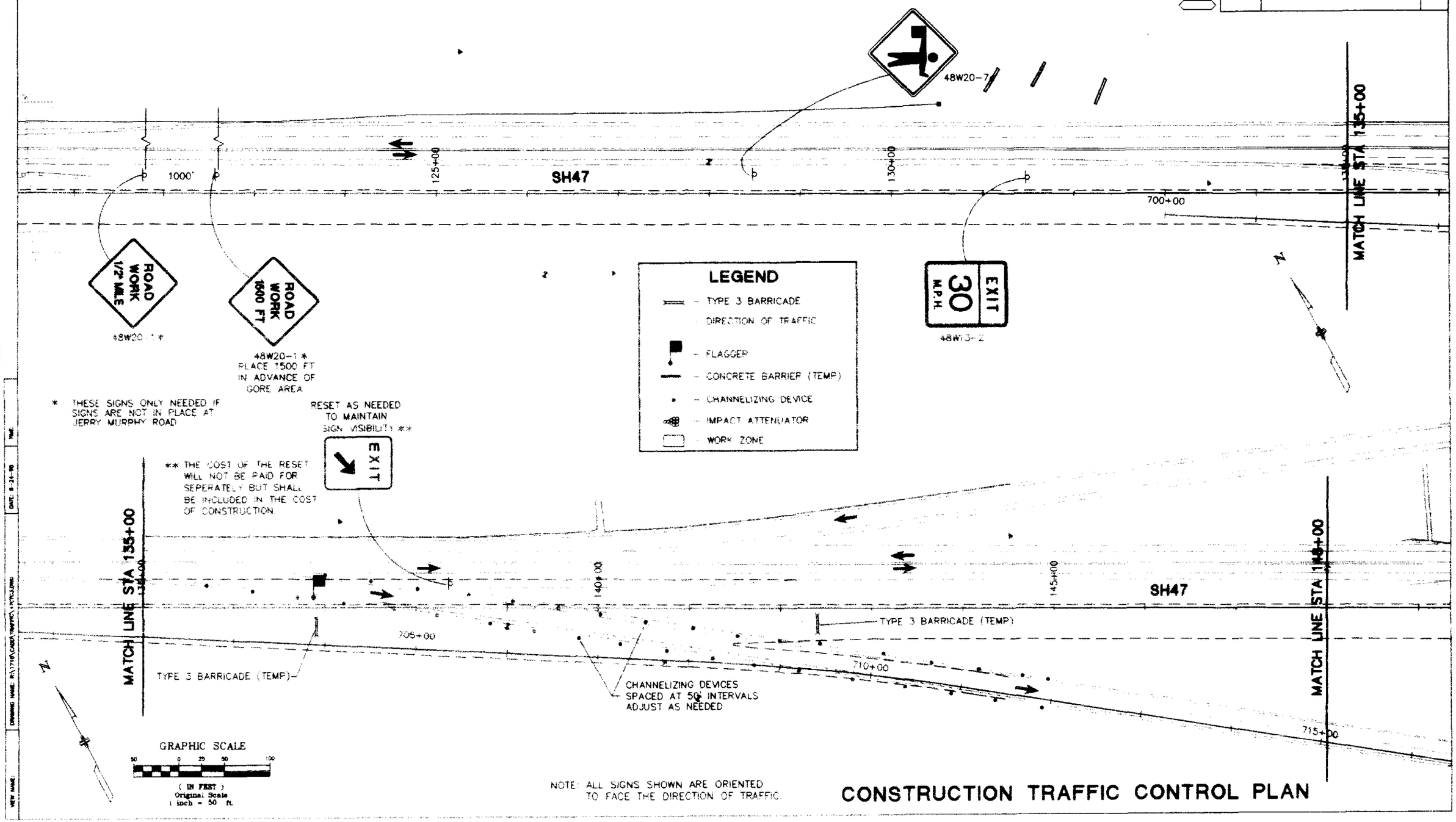

NOTE: ALL SIGNS SHOWN ARE ORIENTED TO FACE THE DIRECTION OF TRAFFIC.

CONSTRUCTION TRAFFIC CONTROL PLAN

DESIGNED BY
CHECKED BY
DETAILED BY
DATE 8-24-90
INITIAL DATE
QUANTITIES BY
CHECKED BY
DRAWING NAME: R:\710\CADD\TRAFFIC\
VIEW NAME:

STATE OF COLORADO
STATE DEPARTMENT OF HIGHWAYS
DIVISION OF HIGHWAYS
D. O. H. FORM NO. 128
REV. FEB. 1984

REGION	COUNTY	PROJECT NO.	SHEET NO.	SHEET TOTALS
	COLORADO	STA 0471-020	89	

PHASE 2 - SHEET 3

ALL PHASE 2 CONSTRUCTION SHALL EXCLUDE THE FINAL ASPHALT LIFT.

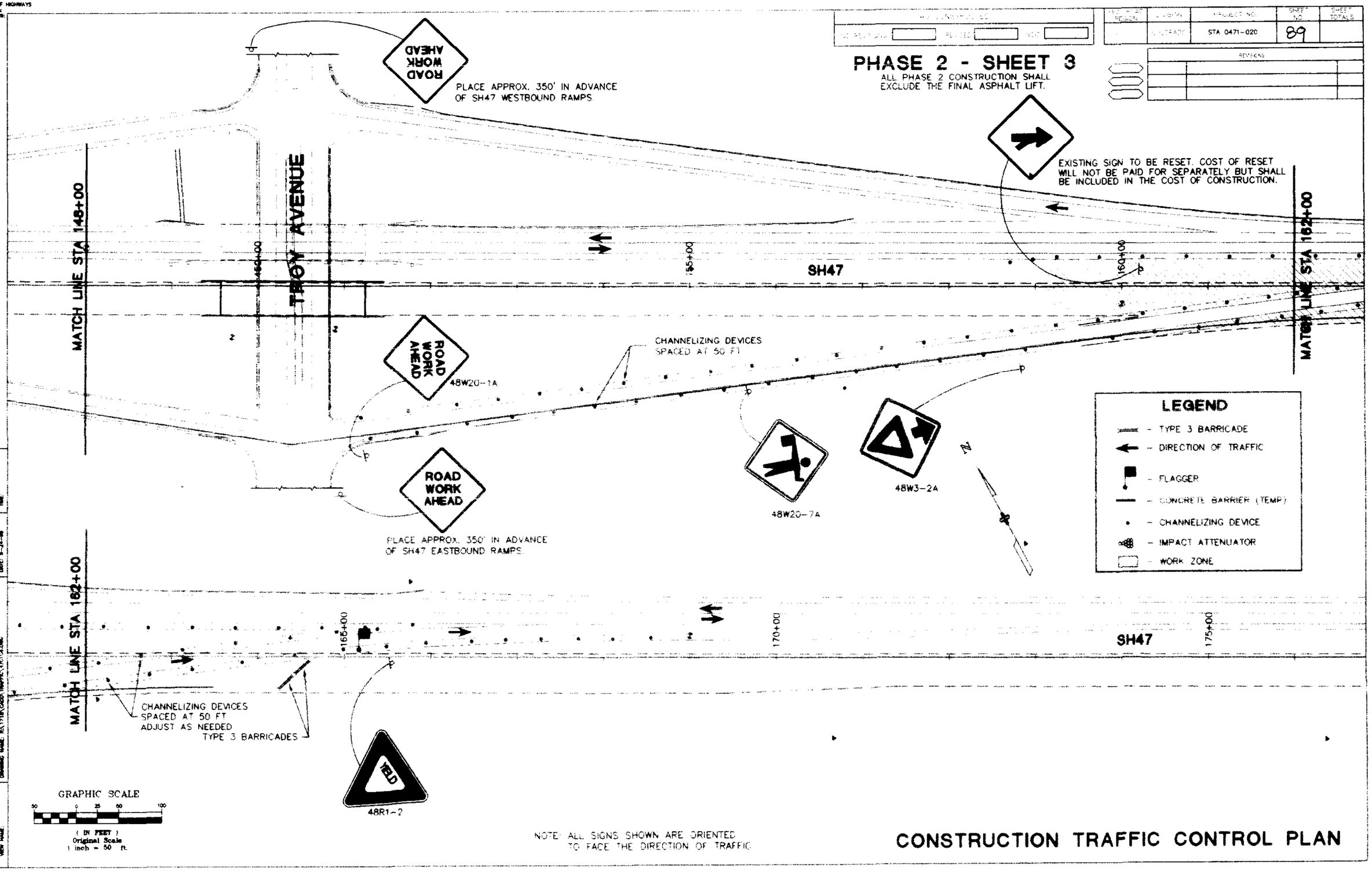

NOTE: ALL SIGNS SHOWN ARE ORIENTED TO FACE THE DIRECTION OF TRAFFIC

CONSTRUCTION TRAFFIC CONTROL PLAN

REVISIONS	

	INITIAL	DATE
DESIGNED BY		
CHECKED BY		
DETAILED BY		
QUANTITIES BY		
CHECKED BY		

DATE: 8-24-99
TIME
DRAWING NAME: R:\1718\CADD\TRAFFIC\17C14.DWG
VIEW NAME

STATE OF COLORADO
STATE DEPARTMENT OF HIGHWAYS
DIVISION OF HIGHWAYS
D. O. H. FORM NO. 126
REV. FEB. 1964

NOTE: ALL SIGNS SHOWN ARE ORIENTED TO FACE THE DIRECTION OF TRAFFIC.

STA 0471-020	90		

REVISIONS

PHASE 2 - SHEET 4

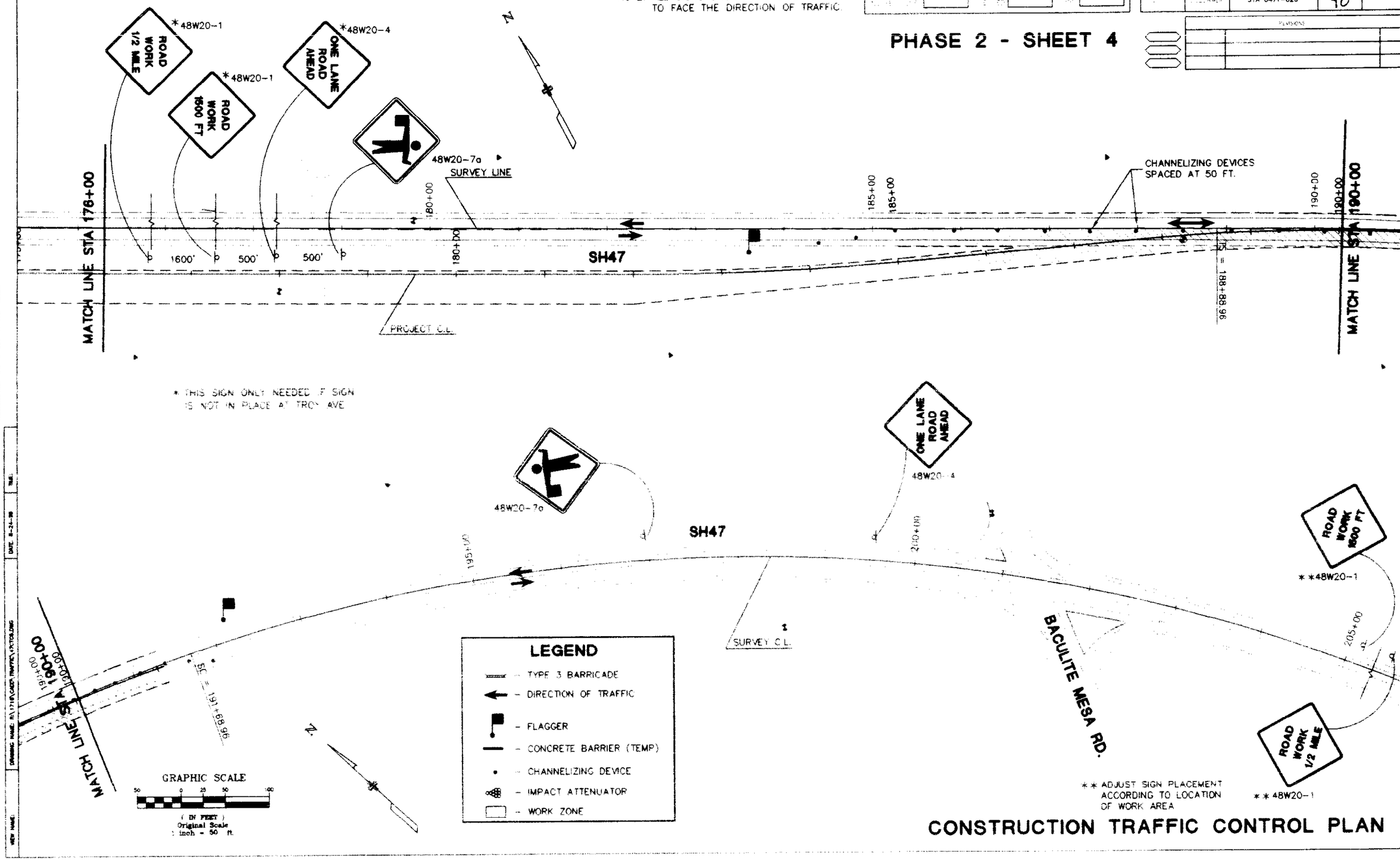

CONSTRUCTION TRAFFIC CONTROL PLAN

	INITIAL	DATE	
DESIGNED BY			CHECKED BY
CHECKED BY			QUANTITIES BY
DETAILED BY			CHECKED BY

DATE 8-24-99 TRAC.

DRAWING NAME: R:\171R\CADD\TRAFFIC\PCTCL.DNG

VIEW NAME:

STATE OF COLORADO
STATE DEPARTMENT OF HIGHWAYS
DIVISION OF HIGHWAYS:
D. O. H. FORM NO. 128:
REV. FEB. 1984

STA 0471-020	91		

PHASE 3 - DETOUR CROSSOVER A

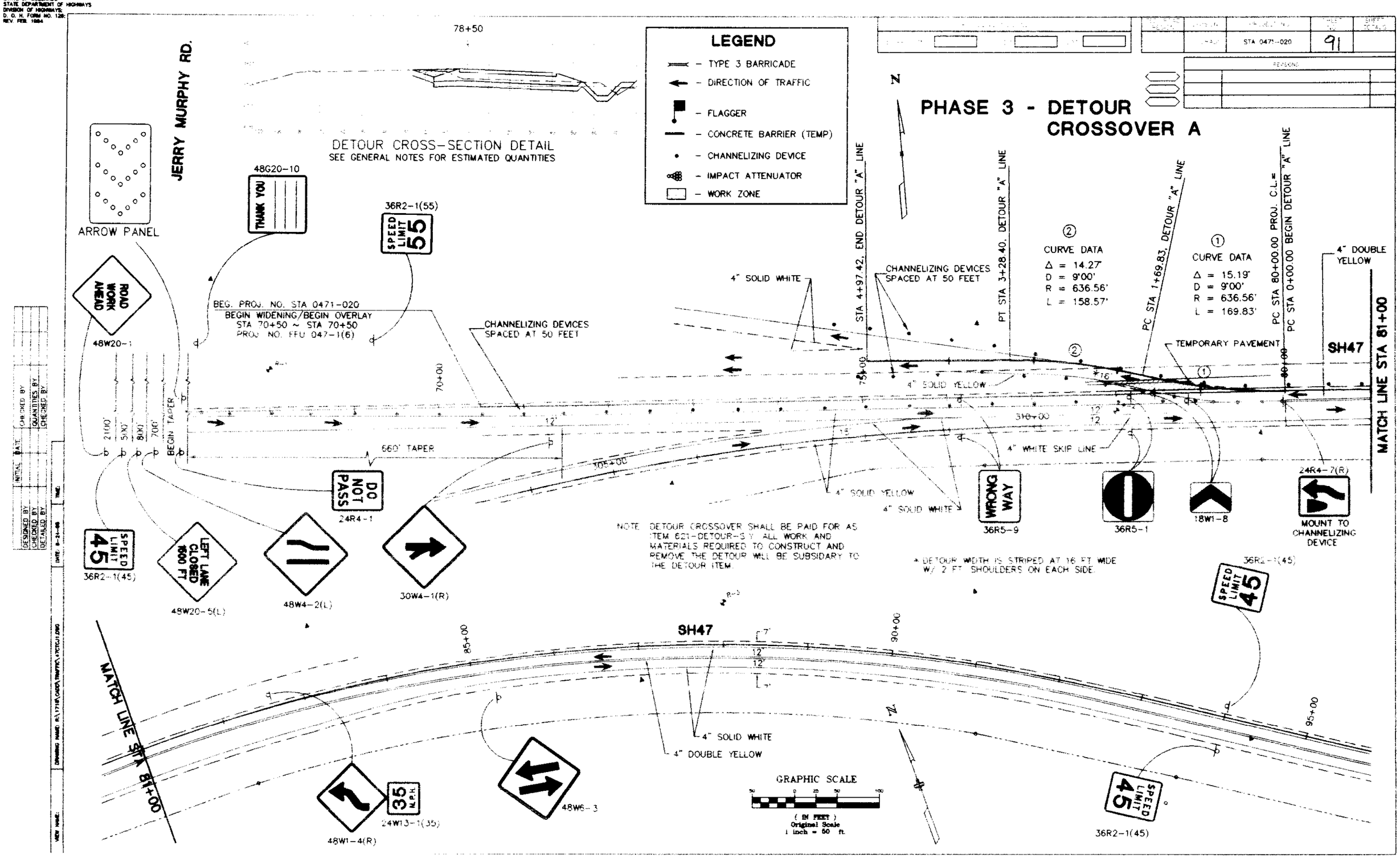

STATE OF COLORADO
STATE DEPARTMENT OF HIGHWAYS
DIVISION OF HIGHWAYS
D. O. H. FORM NO. 128
REV. FEB. 1984

		STA 0471 020	92	

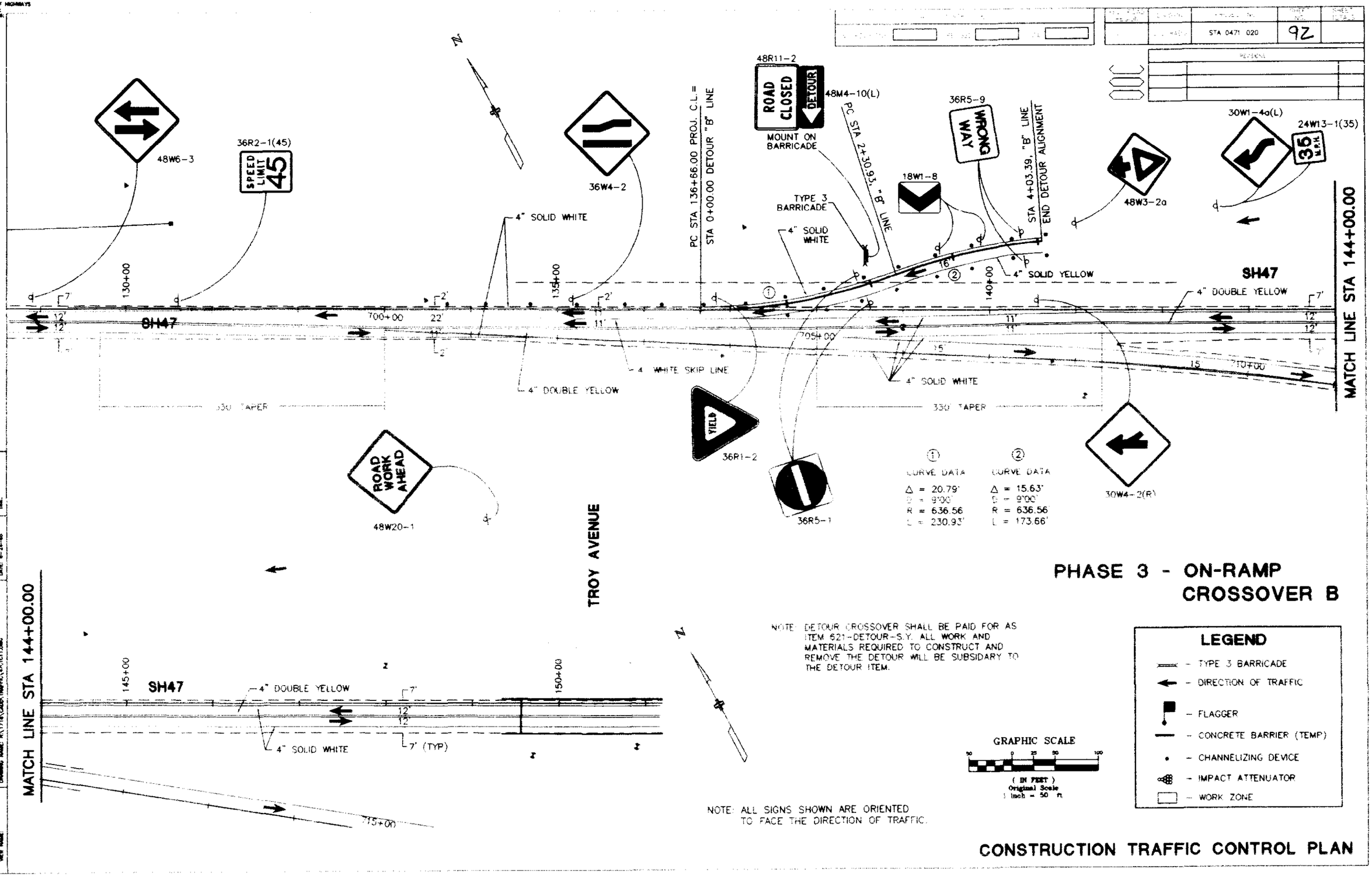

PHASE 3 - ON-RAMP CROSSOVER B

CONSTRUCTION TRAFFIC CONTROL PLAN

DESIGNED BY	INITIAL	DATE	CHECKED BY	QUANTITIES BY
CHECKED BY				CHECKED BY
DETAILED BY				

DATE: 8-24-89 TMC

DRAWING NAME: R:\171R\CADD\TRAFFIC\PHTCT1.DWG

NEW NAME

STATE OF COLORADO
STATE DEPARTMENT OF HIGHWAYS
DIVISION OF HIGHWAYS
D. O. H. FORM NO. 128
REV. FEB. 1984

PROJECT NO.	PROJECT	REGION	SHEET NO.	SHEET TOTAL
		STA 0471-020	93	

REVISIONS

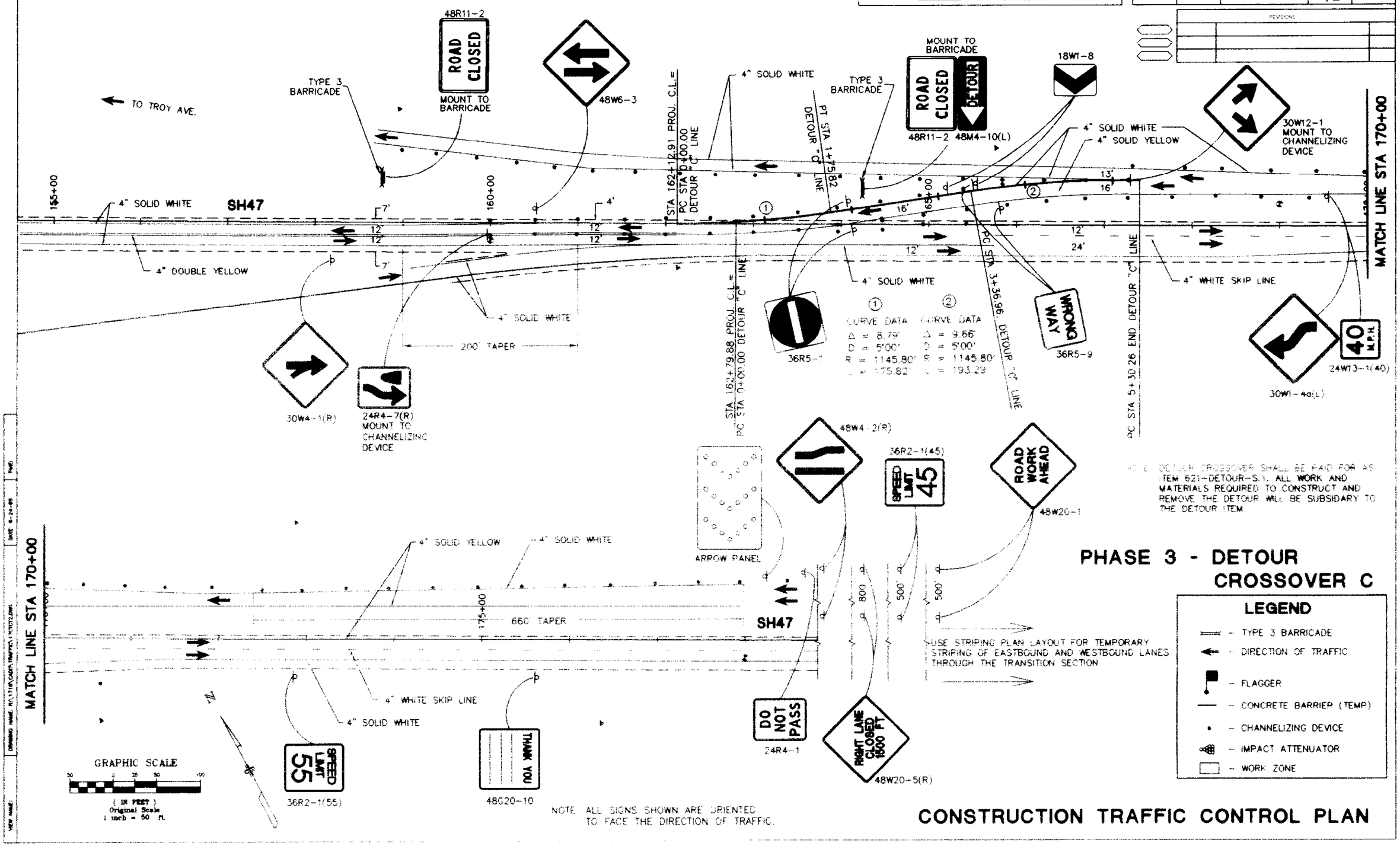

NOTE: DETOUR CROSSOVER SHALL BE PAID FOR AS ITEM 621-DETOUR-S.Y. ALL WORK AND MATERIALS REQUIRED TO CONSTRUCT AND REMOVE THE DETOUR WILL BE SUBSIDARY TO THE DETOUR ITEM.

PHASE 3 - DETOUR CROSSOVER C

CONSTRUCTION TRAFFIC CONTROL PLAN

DESIGNED BY / CHECKED BY / DETAILED BY — INITIAL — DATE — QUANTITIES BY / CHECKED BY — DATE 8-24-95 — DRAWING NAME: R:\171R\CADD\TRAFFIC\170T72.DWG — VIEW NAME

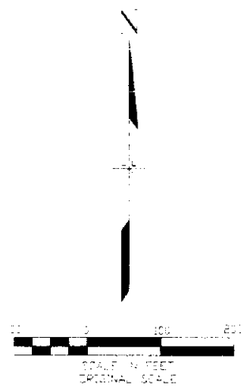

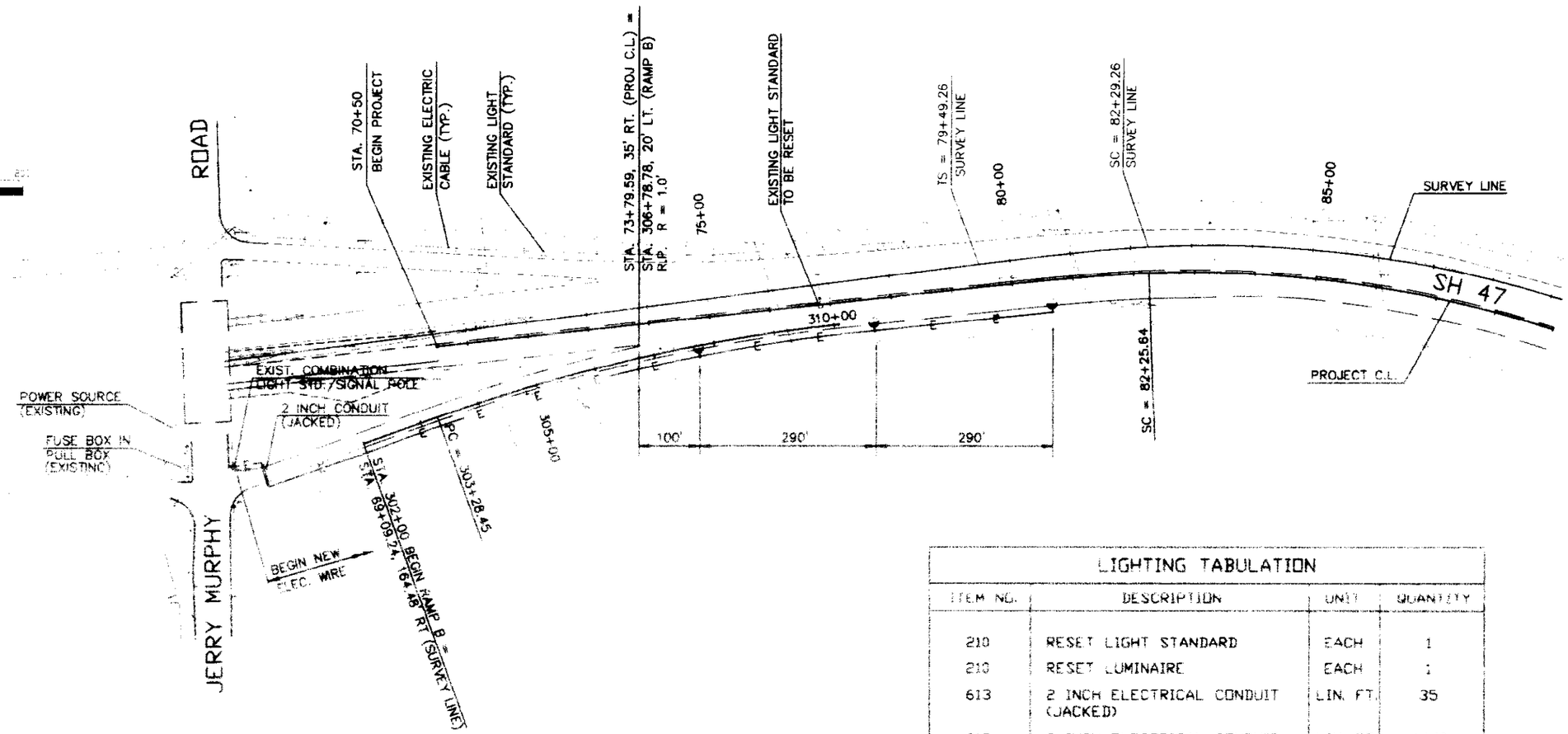

NOTES:

EXISTING CONCRETE FOUNDATION PAD AND APPROXIMATELY 90 L.F. OF ELECTRIC CABLE TO BE REMOVED. THE COST FOR REMOVAL SHALL NOT BE MEASURED AND PAID FOR SEPARATELY, BUT INCLUDED IN ITEM 210 RESET LIGHT STANDARD.

EXISTING ELECTRICAL INFORMATION WAS TAKEN FROM BEST AVAILABLE SOURCES. CONTRACTOR TO FIELD VERIFY EXISTING ELECTRICAL FACILITY LOCATIONS.

SCHEDULE 80 ELECTRICAL CONDUIT SHALL BE USED FOR ALL ROAD CROSSINGS. ALL OTHER CONDUIT MAY BE SCHEDULE 40.

LIGHTING TABULATION

ITEM NO.	DESCRIPTION	UNIT	QUANTITY
210	RESET LIGHT STANDARD	EACH	1
210	RESET LUMINAIRE	EACH	1
613	2 INCH ELECTRICAL CONDUIT (JACKED)	LIN. FT.	35
613	2 INCH ELECTRICAL CONDUIT (PLASTIC)	LIN. FT.	1440
613	WIRING	L.S.	0.26
613	LIGHT STANDARD METAL (40 FOOT)	EACH	2
613	CONCRETE FOUNDATION PAD	EACH	3
613	LUMINAIRE HIGH PRESSURE SODIUM (400 WATT)	EACH	2

INTERCHANGE LIGHTING PLAN
JERRY MURPHY ROAD

REVISION			EXCEPTIONS TO STANDARDS				FED. ROAD DIVISION	DIVISION	PROJECT NO.	SHEET NO.	SHEET TOTAL
			NO REVISIONS	REVISED	NEW			COLORADO	STA 0471-020	95	

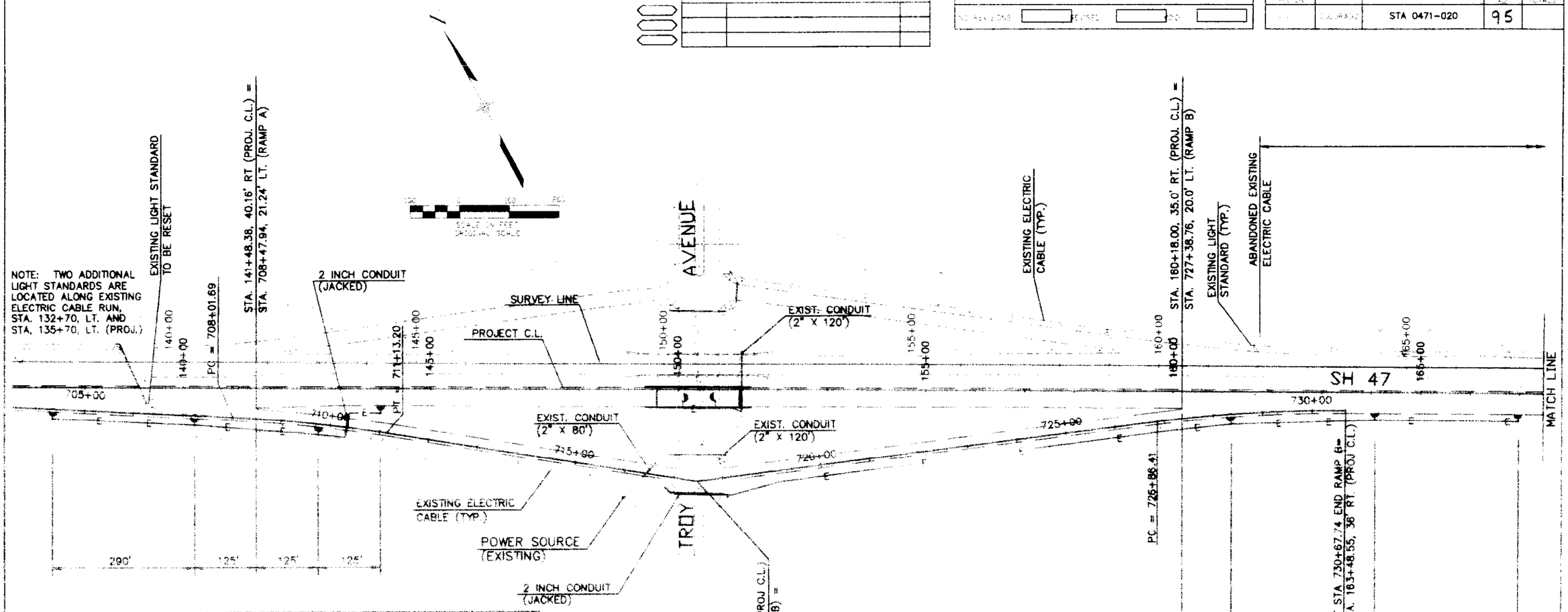

LIGHTING TABULATION

ITEM NO.	DESCRIPTION	UNIT	QUANTITY
210	RESET LIGHT STANDARD	EACH	1
210	RESET LUMINAIRE	EACH	1
613	2 INCH ELECTRICAL CONDUIT (JACKED)	LIN. FT.	140
613	2 INCH ELECTRICAL CONDUIT (PLASTIC)	LIN. FT.	2550
613	WIRING	L.S.	0.48
613	LIGHT STANDARD METAL (40 FOOT)	EACH	6
613	CONCRETE FOUNDATION PAD	EACH	7
613	LUMINAIRE HIGH PRESSURE SODIUM (WALL TYPE)(100 WATT)	EACH	2
613	LUMINAIRE HIGH PRESSURE SODIUM (400 WATT)	EACH	6

NOTES:

FOR EXISTING LIGHT STANDARDS DESIGNATED TO BE RESET, THE EXISTING CONCRETE FOUNDATION PAD AND EXPOSED ELECTRICAL WIRING SHALL BE REMOVED. THE REMOVAL AND DISPOSAL OF EXISTING CONCRETE FOUNDATIONS AND WIRING SHALL NOT BE MEASURED AND PAID FOR SEPARATELY, BUT WILL BE INCLUDED IN BID ITEM 210 RESET LIGHT STANDARD.

EXISTING ELECTRICAL INFORMATION WAS TAKEN FROM BEST AVAILABLE SOURCES. CONTRACTOR TO FIELD VERIFY EXISTING ELECTRICAL FACILITY LOCATIONS.

SCHEDULE 80 ELECTRICAL CONDUIT SHALL BE USED FOR ALL ROAD CROSSINGS. ALL OTHER CONDUIT MAY BE SCHEDULE 40.

INTERCHANGE LIGHTING PLAN
TROY AVENUE

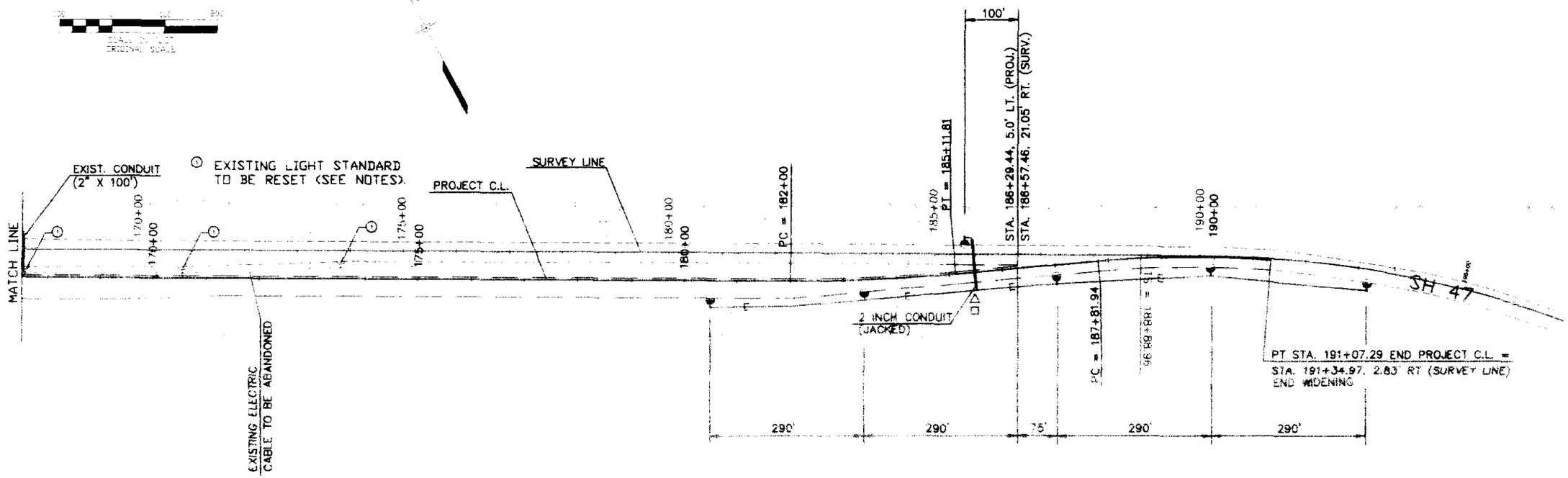

LIGHTING TABULATION			
ITEM NO.	DESCRIPTION	UNIT	QUANTITY
210	RESET LIGHT STANDARD	EACH	3
210	RESET LUMINAIRE	EACH	3
613	2 INCH ELECTRICAL CONDUIT (JACKED)	LIN. FT.	90
613	2 INCH ELECTRICAL CONDUIT (PLASTIC)	LIN. FT.	1350
613	WIRING	L.S.	0.26
613	LIGHT STANDARD METAL (40 FOOT)	EACH	3
613	CONCRETE FOUNDATION PAD	EACH	6
613	LUMINAIRE HIGH PRESSURE SODIUM (400 WATT)	EACH	3

NOTES:

FOR EXISTING LIGHT STANDARDS DESIGNATED TO BE RESET, THE EXISTING CONCRETE FOUNDATION PAD AND EXPOSED ELECTRICAL WIRING SHALL BE REMOVED. THE REMOVAL AND DISPOSAL OF EXISTING CONCRETE FOUNDATIONS AND WIRING SHALL NOT BE MEASURED AND PAID FOR SEPARATELY, BUT WILL BE INCLUDED IN BID ITEM 210 RESET LIGHT STANDARD.

EXISTING ELECTRICAL INFORMATION WAS TAKEN FROM BEST AVAILABLE SOURCES. CONTRACTOR TO FIELD VERIFY EXISTING ELECTRICAL FACILITY LOCATIONS.

POWER SOURCE TO SERVICE THE ROADWAY TRANSITION AREA SHOWN ABOVE TO BE PROVIDED BY WEST PLAINS ELECTRIC, AND TO BE COORDINATED BY THE CONTRACTOR. WEST PLAINS ELECTRIC WILL EXTEND UNDERGROUND CABLE ON THE SOUTH SIDE OF SH47, FROM THE TROY AVE. INTERCHANGE TO STA. 190± THIS WORK WILL BE COORDINATED WITH CONSTRUCTION.

SCHEDULE 80 ELECTRICAL CONDUIT SHALL BE USED FOR ALL ROAD CROSSINGS. ALL OTHER CONDUIT MAY BE SCHEDULE 40.

△ POWER SOURCE CONNECTION
□ POWER SOURCE TO BE INSTALLED BY OWNER

IT IS ESTIMATED THAT 1 POWER SOURCE CONNECTION WILL BE REQUIRED. IT SHALL BE PAID FOR UNDER THE FORCE ACCOUNT ITEM "INSTALL POWER SOURCE CONNECTION."

IT IS ESTIMATED THAT 1 POWER SOURCE FOR HIGHWAY LIGHTING WILL BE REQUIRED. IT SHALL BE PAID FOR UNDER THE FORCE ACCOUNT ITEM "POWER SOURCE FOR HIGHWAY LIGHTING.

LIGHTING PLAN AT ROADWAY TRANSITION

STATE OF COLORADO
STATE DEPARTMENT OF HIGHWAYS
DIVISION OF HIGHWAYS
D O H FORM NO 126
REV FEB 1984

		STA 0471-020	97

REVISIONS

Power Source and Meter Pedestal Details

STATE PERMIT AND INSPECTION REQUIRED.

POWER SOURCE CONNECTION
METER PEDESTAL

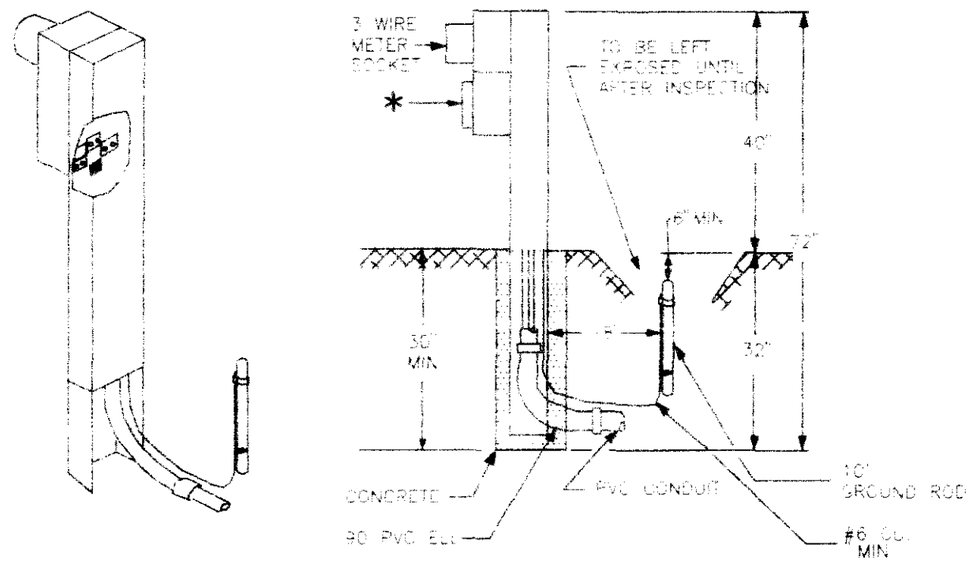

* NOTES

One two pole meter disconnect 120/240 volt 3 wire circuit breaker rated at 50 AMPS. Equipped with 4 or 6 - 20 AMP breakers.

Pedestal shall be weatherproof

ALL NON-CURRENT CARRYING METALLIC PARTS TO BE EFFECTIVELY GROUNDED

INITIAL	DATE	CHECKED BY
		QUANTITIES BY
		CHECKED BY

DESIGNED BY
CHECKED BY
DETAILED BY

DATE: 9/29/1995 FILE: 1406.dgn

FILE NAME DRAWING NAME: C:\DATA\1718\CADD\HEDA2-POWER

IF UNDER 1" THIS SHEET IS NOT FULL SCALE			REGION	DIVISION	PROJECT NO.	SHEET NO.	SHEET TOTALS
DIMENSIONS	REVISED	DATE		FILE/PAGE	STA 0471-020	98	

REVISIONS		

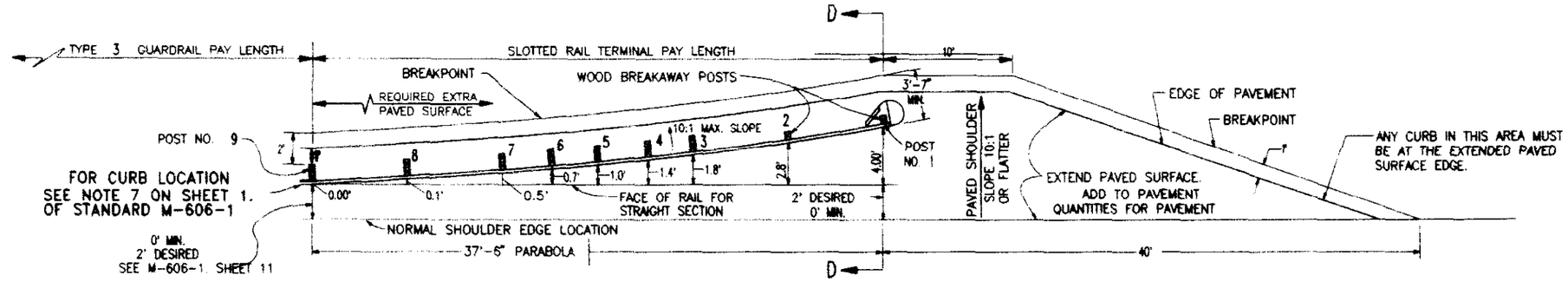

PLAN VIEW

END ANCHORAGE (SLOTTED RAIL TERMINAL)

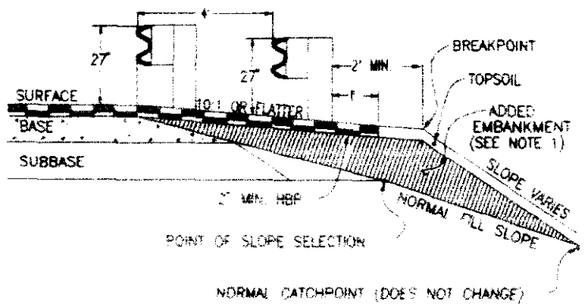

VIEW D-D

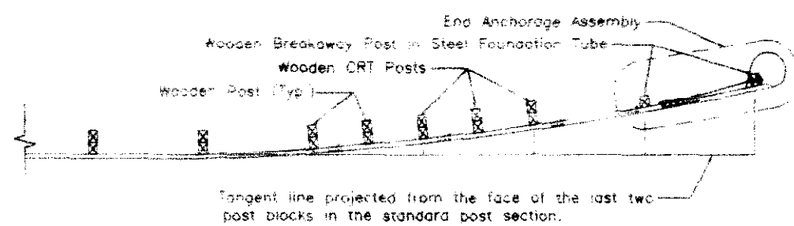

PLAN VIEW

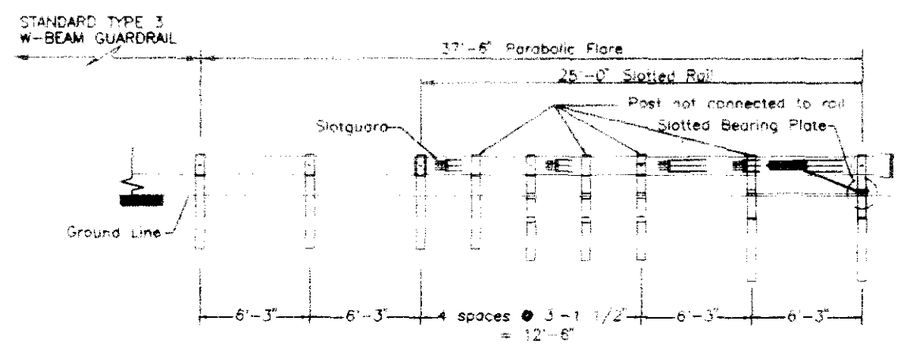

ELEVATION

SLOTTED RAIL TERMINAL

1. PAYMENT FOR THE ADDED EMBANKMENT (APPROXIMATELY 60 CU.YDS.) FOR THE FLARE SHALL BE AS FOLLOWS:
   - UNDER PAY ITEM 203 WHEN THE CONTRACT PLAN INCLUDES PAY ITEM 203
   - INCLUDED IN THE COST OF END ANCHORAGE, TYPE SRT, ITEM 606 PAY ITEM WHEN THE CONTRACT PLAN DOES NOT INCLUDE PAY ITEM 203.

ENGLISH UNITS

COLORADO
DEPARTMENT OF TRANSPORTATION

GUARDRAIL END ANCHORAGE (SLOTTED RAIL TERMINAL)

VIEW NAME: CDT1 | DRAWING NAME: C:\DATA\1718\CADD\ROADWAY\ | DATE: 06-14-1996 | TIME: 09:06:00

STATE OF COLORADO
STATE DEPARTMENT OF HIGHWAYS
DIVISION OF HIGHWAYS
D. O. H. FORM NO. 126
REV. FEB. 1984

FISCAL YEAR BEGIN	DIVISION	PROJECT NO.	SHEET NO.	SHEET TOTALS
.	COLORADO	STA 0471-020	99	

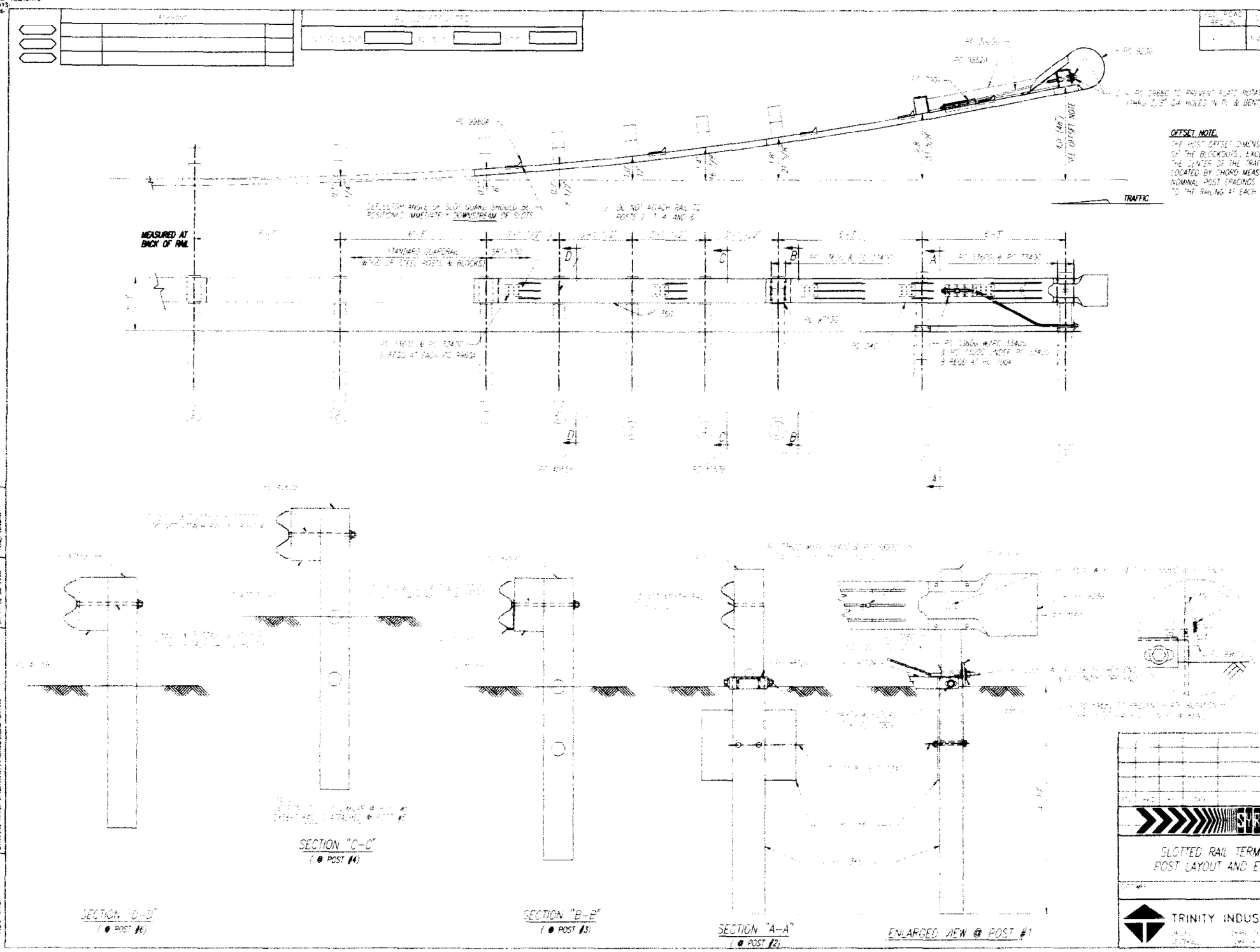

OFFSET NOTE:
THE POST OFFSET DIMENSIONS ARE GIVEN TO THE CENTER OF THE TRAFFIC FACE OF THE BLOCKOUTS, EXCEPT AT THE FIRST TWO POSTS, WHERE THE DIMENSION IS TO THE CENTER OF THE TRAFFIC FACE OF THE POST. OFFSET POINTS ARE TO BE LOCATED BY CHORD MEASUREMENTS AT THE BACK OF THE RAIL EQUAL TO THE NOMINAL POST SPACINGS SHOWN. POSTS ARE TO BE SET APPROXIMATELY RADIAL TO THE RAILING AT EACH POST LOCATION.

BILL OF MATERIAL

PC	QTY	DESCRIPTION
34G	1	12/12'6/S SRT-1 (GUARDRAIL)
35G	1	12/12'6/6'3/S SRT-2 (GUARDRAIL)
700A	1	CABLE ANCHOR BRACKET
705G	1	2" ø x 5 1/2" PIPE
736G	2	5'0 TUBE SLEEVE
766G	2	1/4 x 18 x 24 SOIL PLATE
775G	1	5/8 x 6 x 8 BEARING PLATE
923G	1	12/BARRIER/98" (TERMINAL)
3000G	1	3/4 x 6'6 CABLE
3300G	18	5/8" WASHER
3320G	1	3/16 x 1 3/4 x 3 WASHER
3340G	72	5/8" HEX NUT
3360G	53	5/8"ø x 1 1/4" SPLICE BOLT
3380G	8	5/8"ø x 1 1/2" HEX HD BOLT
3478G	4	5/8"ø x 7 1/2" HEX HD BOLT
3497G	2	5/8"ø x 9 1/2" HEX HD BOLT
3500G	1	5/8"ø x 10" POST BOLT
3580G	4	5/8"ø x 18" POST BOLT
3900G	2	1" WASHER
3910G	2	1" HEX NUT
4055B	1	5'4 POST 6 x 8
4063B	3	6'0 POST 6 x 8
4075G	4	14" BLOCK 6 x 8
4147B	2	7'9 POST 5 1/2 x 7 1/2
5968C	2	16d NAIL SRT
9713G	1	SHELF ANGLE
9852A	1	STRUT ASSEMBLY
9960A	5	SLOT GUARD
9961G	1	3/8 x 3 x 4 PLATE WASHER

SRT SRT-100

SLOTTED RAIL TERMINAL (SRT-100)
POST LAYOUT AND ERECTION DETAILS

DRAWN: B. TAKACH
CHECKED:
APPROVED:

TRINITY INDUSTRIES, INC.

SS 400 | 0

DRAWING NAME: C:\DATA\718\CADD\ROAD\SRT100 | DATE: 10-30-1995 | TIME: 11:48PM | VIEW NAME:

AS CONSTRUCTED				FED. ROAD DIVISION	DIVISION	PROJECT NO.	SHEET NO.	SHEET TOTALS
N.O. REFERENCE	PROJECT	DATE		17	COLORADO	STA 0471-020	100	

REVISIONS		

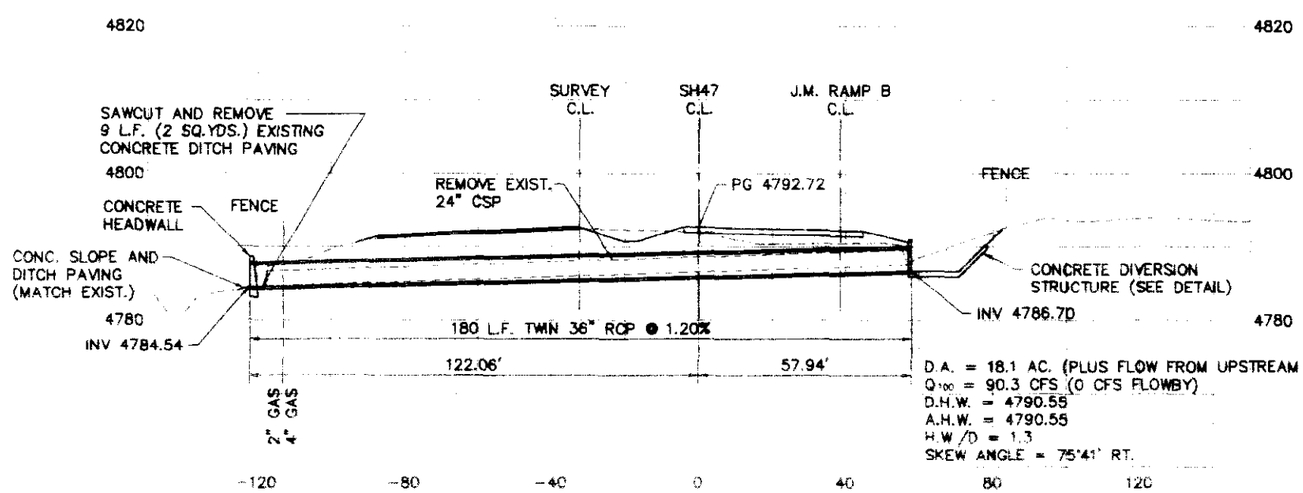

STA. 76+15.39 REQ'D. ~ REMOVE 175 LF EXIST. 24"CSP. INSTALL 180 LF TWIN 36" RCP WITH CONC. HEADWALL, LT. & CONCRETE DIVERSION STRUCTURE, RT.

D.A. = 18.1 AC. (PLUS FLOW FROM UPSTREAM BASIN)
Q_{100} = 90.3 CFS (0 CFS FLOWBY)
D.H.W. = 4790.55
A.H.W. = 4790.55
H.W./D = 1.3
SKEW ANGLE = 75°41' RT.

STA. 76+15.39

TWIN 36" REINFORCED CONCRETE PIPES

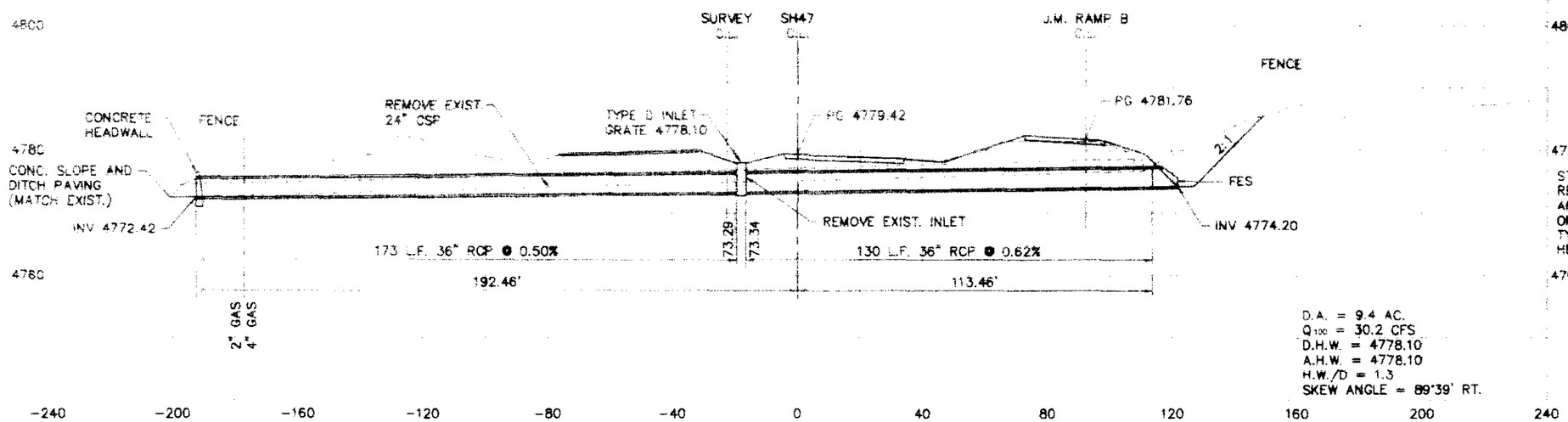

STA. 71+45.41 REQ'D. ~ REMOVE 313 LF EXIST. 24" CSP AND INLET. INSTALL 303 LF OF 36" RCP WITH END SECTION, TYPE D INLET 18' LT. & CONC. HEADWALL, LT.

D.A. = 9.4 AC.
Q_{100} = 30.2 CFS
D.H.W. = 4778.10
A.H.W. = 4778.10
H.W./D = 1.3
SKEW ANGLE = 89°39' RT.

STA. 71+45.41

36" REINFORCED CONCRETE PIPE

ORIGINAL SCALES: 1"=20' HORIZONTAL
1"=10' VERTICAL

STRUCTURE CROSS SECTIONS

AS CONSTRUCTED									
NO. REVISIONS		APPROVAL		DATE		TPL ROAD SECTION	LOCATION	PROJECT NO.	SHEET NO.	SHEET TOTALS
						VI	COLORADO	STA 0471-020	101	

REVISIONS		

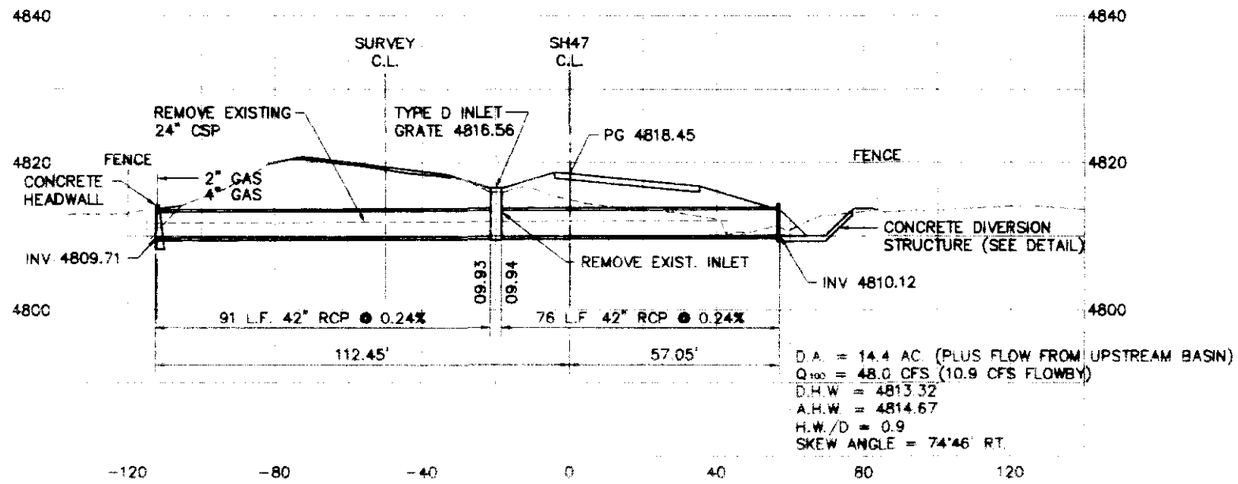

D.A. = 14.4 AC. (PLUS FLOW FROM UPSTREAM BASIN)
Q_{100} = 48.0 CFS (10.9 CFS FLOWBY)
D.H.W. = 4813.32
A.H.W. = 4814.67
H.W./D = 0.9
SKEW ANGLE = 74°46' RT.

STA. 86+08.23, RT ~ REQ'D.
REMOVE 155 LF EXIST. 24"CSP & EXIST. INLET
INSTALL 167 LF 42" RCP WITH CONC. HEADWALL, LT.
TYPE D INLET LT. W/ CONCRETE DIVERSION STRUCTURE, RT.

STA. 86+08.23

42" REINFORCED CONCRETE PIPE

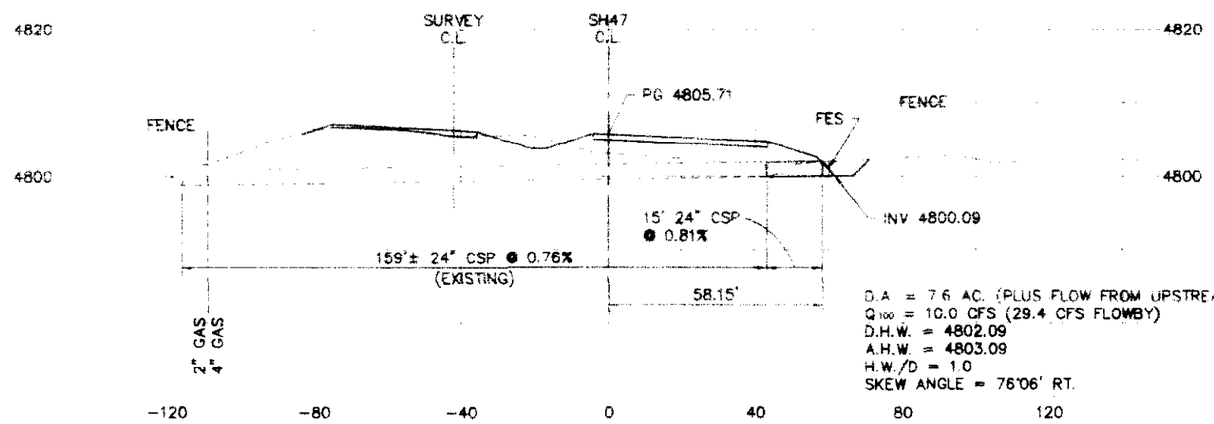

D.A. = 7.6 AC. (PLUS FLOW FROM UPSTREAM BASIN)
Q_{100} = 10.0 CFS (29.4 CFS FLOWBY)
D.H.W. = 4802.09
A.H.W. = 4803.09
H.W./D = 1.0
SKEW ANGLE = 76°06' RT.

STA. 81+13.24, RT.
REQ'D. EXTEND EXIST. 24" CSP 15 LF W/ RIPRAP BERM & END SECTION, RT.

STA. 81+13.24

24" CORRUGATED STEEL PIPE

ORIGINAL SCALES: 1"=20' HORIZONTAL
1"=10' VERTICAL

STRUCTURE CROSS SECTIONS

NO. CONSTRUCTED				REG. ROAD MAP.	DIVISION	PROJECT NO.	SHEET NO.	SHEET TOTALS
NO. REVISIONS	REVISED	VOID		V	COLORADO	STA 0471-020	102	

REVISIONS		

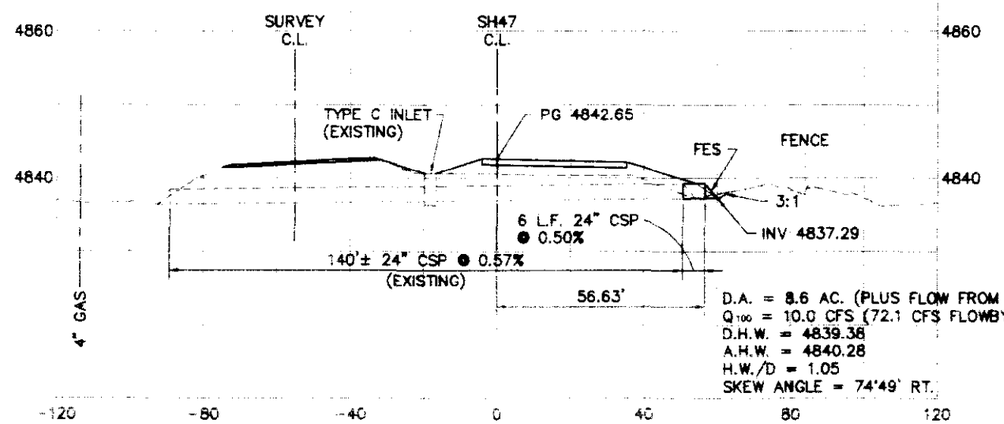

D.A. = 8.6 AC. (PLUS FLOW FROM UPSTREAM BASIN)
Q_{100} = 10.0 CFS (72.1 CFS FLOWBY)
D.H.W. = 4839.38
A.H.W. = 4840.28
H.W./D = 1.05
SKEW ANGLE = 74°49' RT.

STA. 96+01, 50' RT. REQ.D" ~
EXTEND EXIST. 24" CSP 6 LF
WITH RIPRAP BERM &
END SECTION, RT.

STA. 96+01.50

24" CORRUGATED STEEL PIPE

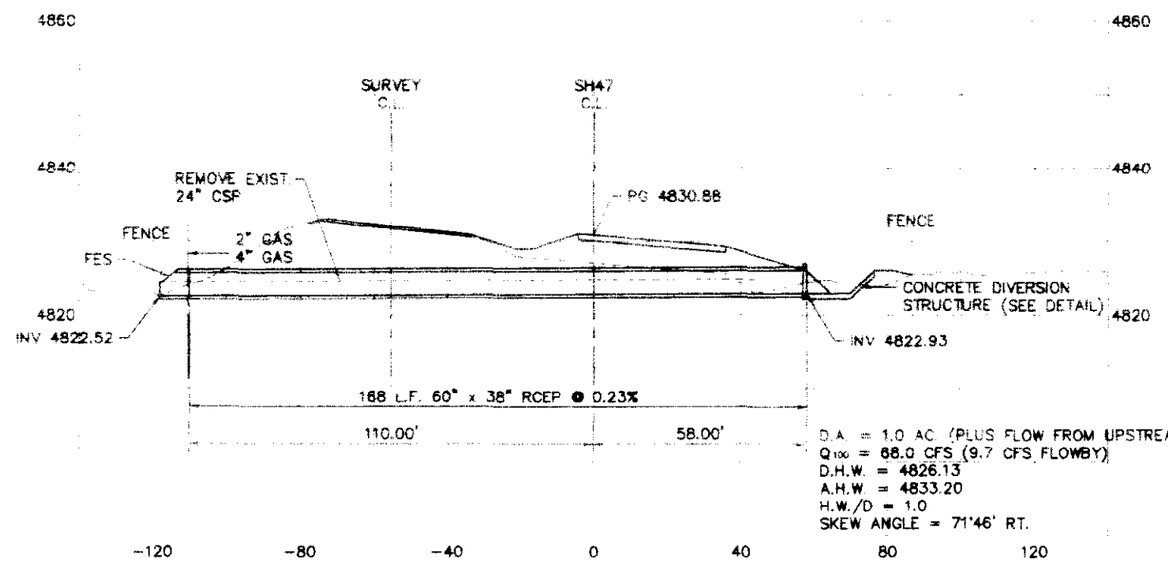

D.A. = 1.0 AC. (PLUS FLOW FROM UPSTREAM BASIN)
Q_{100} = 68.0 CFS (9.7 CFS FLOWBY)
D.H.W. = 4826.13
A.H.W. = 4833.20
H.W./D = 1.0
SKEW ANGLE = 71°46' RT.

STA. 91+05.01, RT ~ REQ'D.
REMOVE 162 LF EXIST. 24" CSP
INSTALL 168 LF 60"x38" RCEP
W/ END SECTION & CONCRETE
DIVERSION STRUCTURE, RT.

STA. 91+05.01

60" x 38" REINFORCED CONCRETE ELLIPTICAL PIPE

ORIGINAL SCALES: 1"=20' HORIZONTAL
1"=10' VERTICAL

STRUCTURE CROSS SECTIONS

DIVISION	PROJECT NO.	SHEET NO.	SHEET TOTALS
COLORADO	STA 0471-020	103	

REVISIONS

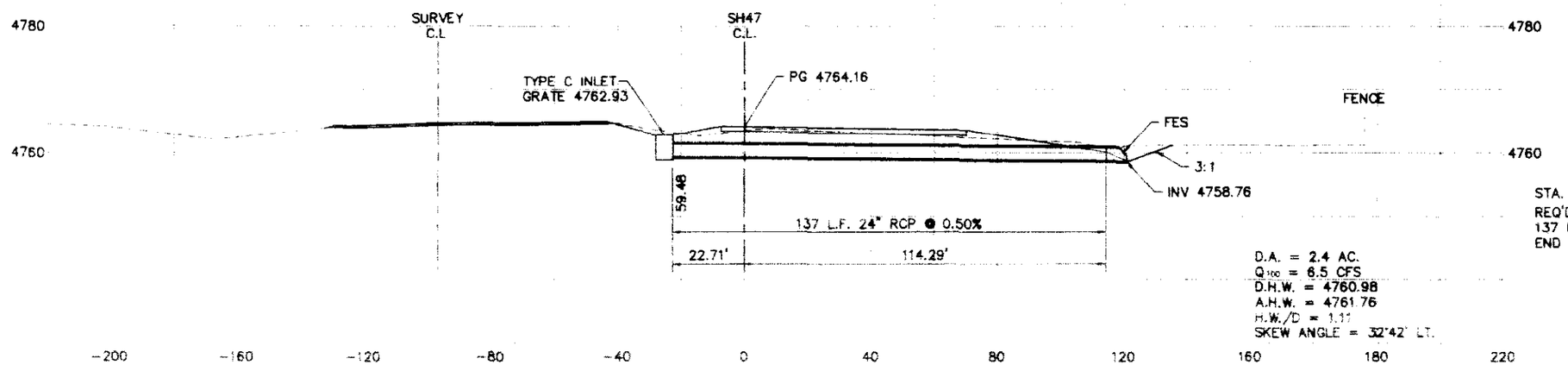

D.A. = 2.4 AC.
Q_{100} = 6.5 CFS
D.H.W. = 4760.98
A.H.W. = 4761.76
H.W./D = 1.11
SKEW ANGLE = 32°42' LT.

STA. 171+00.79, LT.
REQ'D. ~ TYPE C INLET & 137 LF OF 24" RCP AND END SECTION, RT.

STA. 171+00.79

24" REINFORCED CONCRETE PIPE

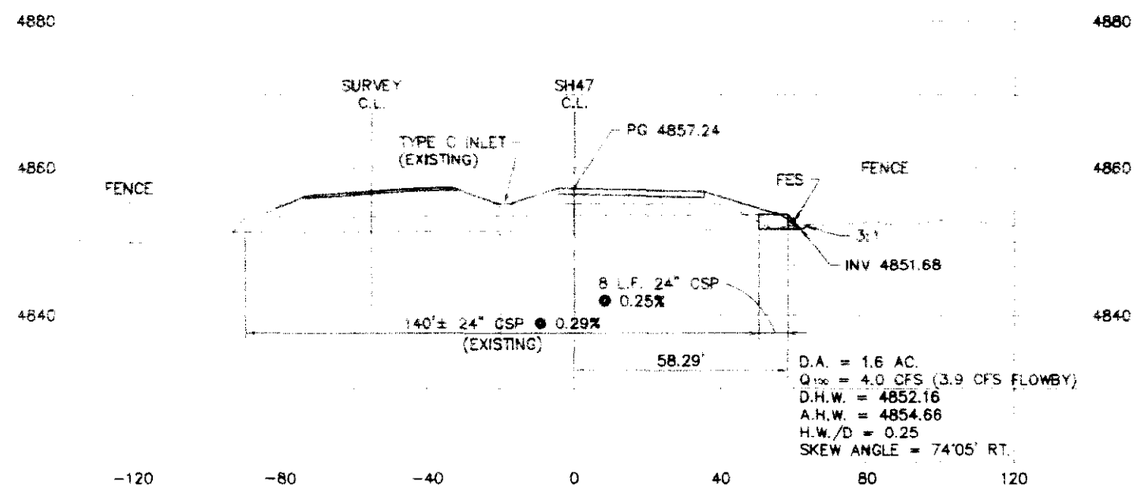

D.A. = 1.6 AC.
Q_{100} = 4.0 CFS (3.9 CFS FLOWBY)
D.H.W. = 4852.16
A.H.W. = 4854.66
H.W./D = 0.25
SKEW ANGLE = 74°05' RT.

STA. 101+01.92, RT REQ'D. ~ EXTEND EXIST. 24" CSP 8 LF W/ END SECTION, RT.

STA. 101+01.92

24" CORRUGATED STEEL PIPE

ORIGINAL SCALES: 1"=20' HORIZONTAL
1"=10' VERTICAL

STRUCTURE CROSS SECTIONS

AS CONSTRUCTED				TO ROAD BELOW	DIVISION	PROJECT NO.	SHEET NO.	SHEET TOTALS
NO REVISIONS		REVISED		JOB				
					COLORADO	STA 0471-020	104	

REVISIONS		

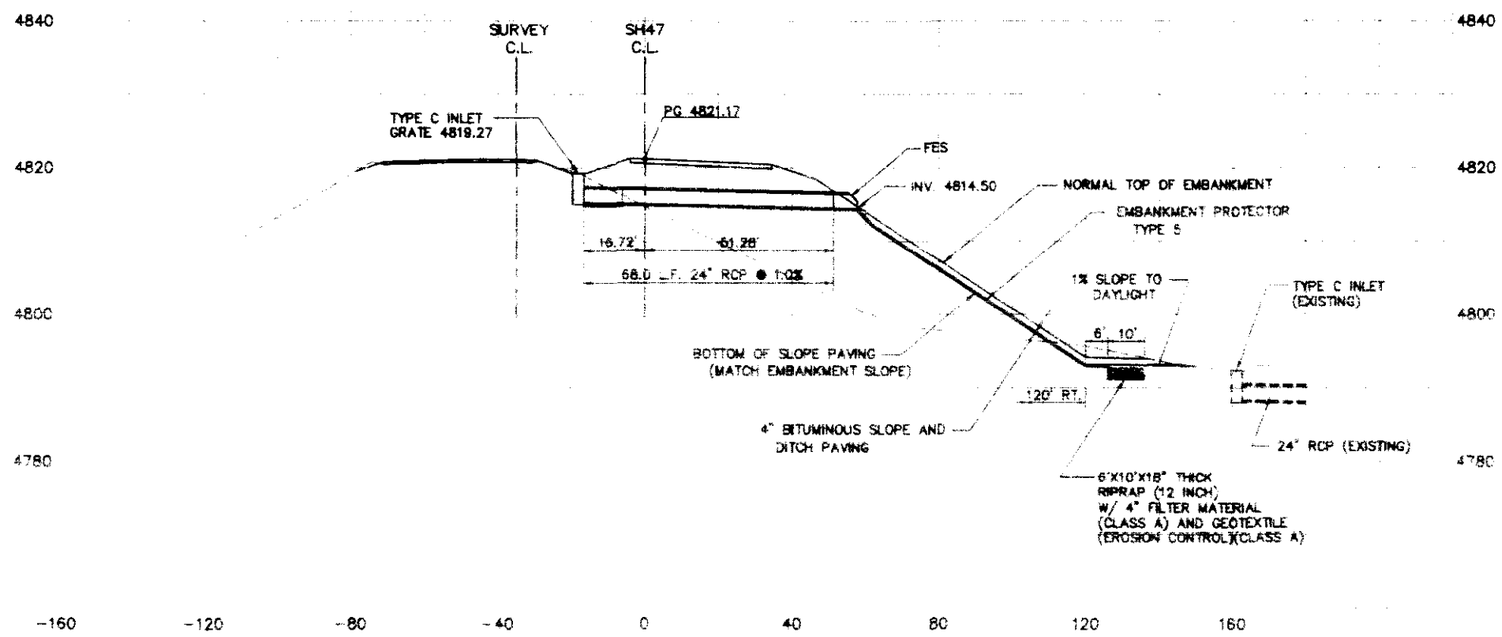

STA. 149+12.45, LT.
REQ'D. TYPE C INLET
& 68 LF 24" RCP
W/ END SECTION, RIPRAP
& GEOTEXTILE
REQ'D. EMBANKMENT
PROTECTOR, TYPE 5

STA. 149+12.45

24" REINFORCED CONCRETE PIPE

D.A. = 2.2 AC
Q_{100} = 3.7 CFS
D.H.W. = 21.0'
A.H.W. = 21.0'
H.W./D = 1.0
SKEW ANGLE = 75°59' RT

ORIGINAL SCALES: 1"=20' HORIZONTAL
1"=10' VERTICAL

STRUCTURE CROSS SECTIONS